SUZUKI

UH125

SERVICE MANUAL

99500-31350-01E

FOREWORD

This manual contains an introductory description on the SUZUKI UH125 and procedures for its inspection/service and overhaul of its main components. Other information considered as generally known is not included.
Read the GENERAL INFORMATION section to familiarize yourself with the motorcycle and its maintenance. Use this section as well as other sections to use as a guide for proper inspection and service.
This manual will help you know the motorcycle better so that you can assure your customers of fast and reliable service.

- *This manual has been prepared on the basis of the latest specifications at the time of publication. If modifications have been made since then, differences may exist between the content of this manual and the actual motorcycle.*
- *Illustrations in this manual are used to show the basic principles of operation and work procedures. They may not represent the actual motorcycle exactly in detail.*
- *This manual is written for persons who have enough knowledge, skills and tools, including special tools, for servicing SUZUKI motorcycles. If you do not have the proper knowledge and tools, ask your authorized SUZUKI motorcycle dealer to help you.*

⚠ WARNING

Inexperienced mechanics or mechanics without the proper tools and equipment may not be able to properly perform the services described in this manual.
Improper repair may result in injury to the mechanic and may render the motorcycle unsafe for the rider and passenger.

SUZUKI MOTOR ESPAÑA, S. A.

GROUP INDEX

HOW TO USE THIS MANUAL
TO LOCATE WHAT YOU ARE LOOKING FOR:

1. The text of this manual is divided into sections.
2. The section titles are listed in the GROUP INDEX.
3. Holding the manual as shown at the right will allow you to find the first page of the section easily.
4. The contents are listed on the first page of each section to help you find the item and page you need.

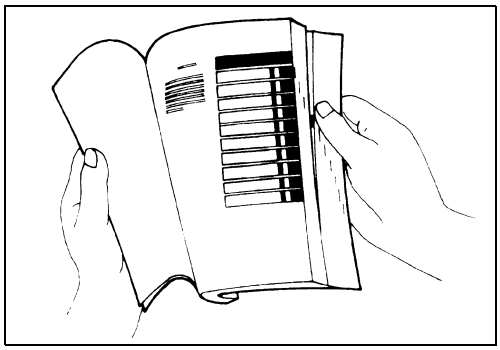

COMPONENT PARTS AND WORK TO BE DONE

Under the name of each system or unit, is its exploded view. Work instructions and other service information such as the tightening torque, lubricating points and locking agent points, are provided.
Example: Front wheel

①	Brake disc
②	Collar
③	Dust seal
④	Bearing
⑤	Spacer
⑥	Speedometer gear box
⑦	Front axle
Ⓐ	Brake disc bolt
Ⓑ	Front axle nut

ITEM	N·m	kgf-m
Ⓐ	44	4.4
Ⓑ	23	2.3

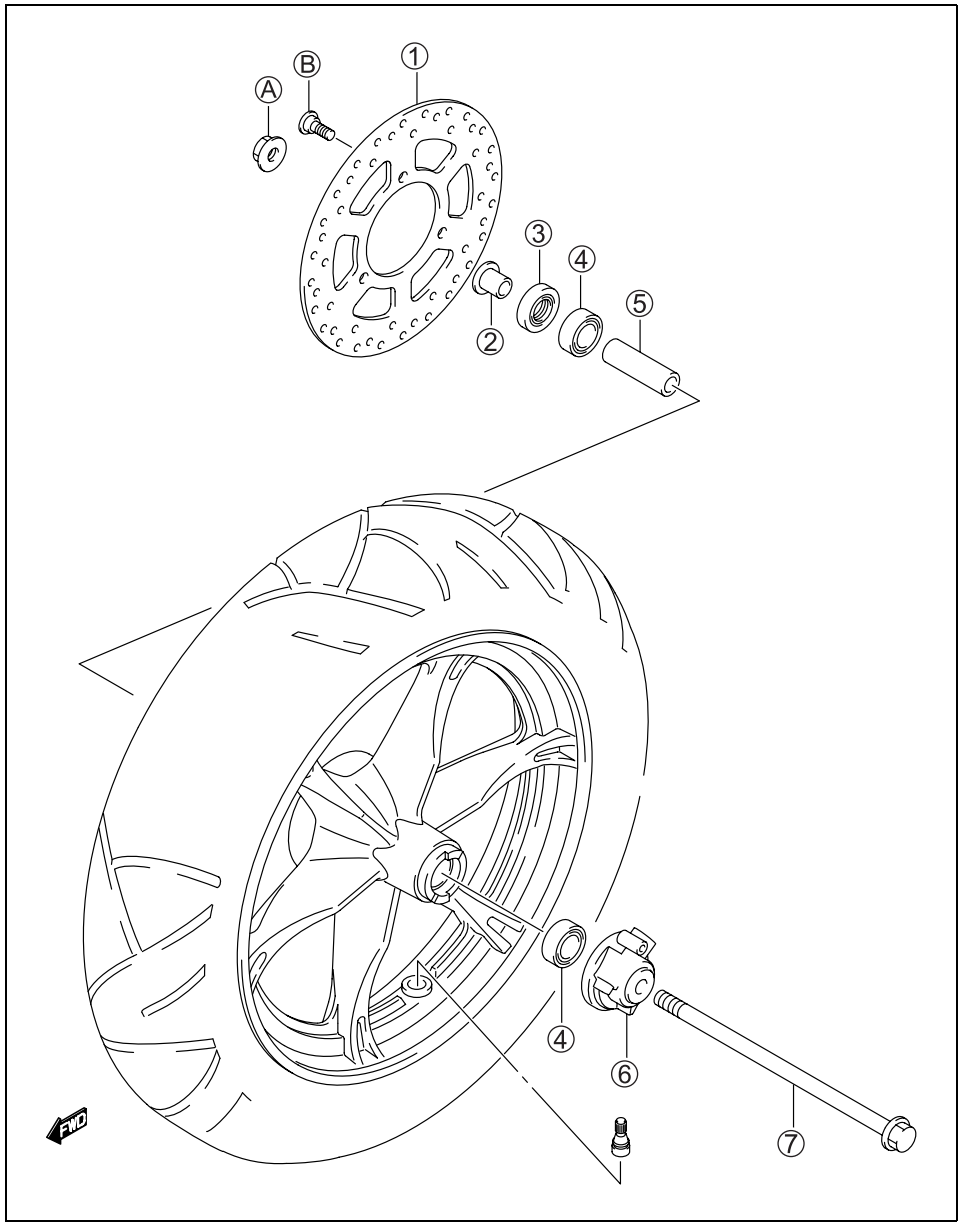

SYMBOL

Listed in the table below are the symbols indicating instructions and other information necessary for servicing. The meaning of each symbol is also included in the table.

SYMBOL	DEFINITION	SYMBOL	DEFINITION
	Torque control required. Data beside it indicates specified torque.	1360	Apply THREAD LOCK SUPER “1360” or equivalent. 99000-32130
OIL	Apply oil. Use engine oil unless otherwise specified.	LLC	Use engine coolant. 99000-99032-11X
M/O	Apply molybdenum oil solution. (Mixture of engine oil and SUZUKI MOLY PASTE in a ratio of 1:1)	FORK	Use fork oil. 99000-99044-10G
A	Apply SUZUKI SUPER GREASE “A” or equivalent. 99000-25010	BF	Apply or use brake fluid.
M	Apply SUZUKI MORY PASTE or equivalent. 99000-25140	V	Measure in voltage range.
S	Apply SUZUKI SILICONE GREASE or equivalent. 99000-25100	A	Measure in current range.
1215	Apply SUZUKI BOND “1215” or equivalent. 99000-31110	Ω	Measure in resistance range.
1207B	Apply SUZUKI BOND “1207B” or equivalent. 99000-31140		Measure in diode test range.
1303	Apply THREAD LOCK SUPER “1303” or equivalent. 99000-32030		Measure in continuity test range.
1322	Apply THREAD LOCK SUPER “1322” or equivalent. 99000-32110	TOOL	Use special tool.
1342	Apply THREAD LOCK “1342” or equivalent. 99000-32050	DATA	Indication of service data.

ABBREVIATIONS USED IN THIS MANUAL

A

ABDC	: After Bottom Dead Center
AC	: Alternating Current
ACL	: Air Cleaner, Air Cleaner Box
API	: American Petroleum Institute
ATDC	: After Top Dead Center
A/F	: Air Fuel Mixture

B

BBDC	: Before Bottom Dead Center
BTDC	: Before Top Dead Center
B+	: Battery Positive Voltage

C

CKP Sensor	: Crankshaft Position Sensor (CKPS)
CKT	: Circuit
CO	: Carbon Monoxide
CPU	: Central Processing Unit

D

DC	: Direct Current
DMC	: Dealer Mode Coupler
DRL	: Daytime Running Light
DTC	: Diagnostic Trouble Code

E

ECM	: Engine Control Module Engine Control Unit (ECU) (FI Control Unit)
ECT Sensor	: Engine Coolant Temperature Sensor (ECTS), Water Temp. Sensor (WTS)

F

FI	: Fuel Injection, Fuel Injector
FP	: Fuel Pump
FPR	: Fuel Pressure Regulator

G

GEN	: Generator
GND	: Ground

H

HC	: Hydrocarbons

I

IAP Sensor	: Intake Air Pressure Sensor (IAPS) (MAP Sensor)
IG	: Ignition

L

LCD	: Liquid Crystal Display
LED	: Light Emitting Diode (Malfunction Indicator Lamp)
LH	: Left Hand

M

MAL-Code	: Malfunction Code (Diagnostic Code)
Max	: Maximum
MIL	: Malfunction Indicator Lamp (LED)
Min	: Minimum

N

NOX	: Nitrogen Oxides

O

OHC	: Over Head Camshaft
OPS	: Oil Pressure Switch

P

PCV	: Positive Crankcase Ventilation (Crankcase Breather)

R

RH	: Right Hand
ROM	: Read Only Memory

S

SAE	: Society of Automotive Engineers
SDS	: Suzuki Diagnosis System

T

TO Sensor	: Tip-Over Sensor (TOS)
TP Sensor	: Throttle Position Sensor (TPS)

WIRE COLOR

B	: Black	G	: Green	P	:Pink
Bl	: Blue	Gr	: Gray	R	: Red
Br	: Brown	Lbl	: Light blue	W	: White
Dg	: Dark green	Lg	: Light green	Y	: Yellow
Dgr	: Dark gray	O	: Orange		

B/Bl	: Black with Blue tracer	B/Br	: Black with Brown tracer
B/G	: Black with Green tracer	B/Lg	: Black with Light green tracer
B/R	: Black with Red tracer	B/W	: Black with White tracer
B/Y	: Black with Yellow tracer	Bl/B	: Blue with Black tracer
Bl/G	: Blue with Green tracer	Bl/R	: Blue with Red tracer
Bl/W	: Blue with White tracer	Bl/Y	: Blue with Yellow tracer
Br/Y	: Brown with Yellow tracer	G/B	: Green with Black tracer
G/Bl	: Green with Blue tracer	G/R	: Green with Red tracer
G/W	: Green with White tracer	G/Y	: Green with Yellow tracer
Gr/B	: Gray with Black tracer	Gr/R	: Gray with Red tracer
Gr/W	: Gray with White tracer	Gr/Y	: Gray with Yellow tracer
Lg/Bl	: Light green with Blue tracer	Lg/G	: Light green with Green tracer
Lg/W	: Light green with White tracer	O/B	: Orange with Black tracer
O/Bl	: Orange with Blue tracer	O/G	: Orange with Green tracer
O/R	: Orange with Red tracer	O/W	: Orange with White tracer
O/Y	: Orange with Yellow tracer	P/B	: Pink with Black tracer
P/W	: Pink with White tracer	R/B	: Red with Black tracer
R/Bl	: Red with Blue tracer	R/Y	: Red with Yellow tracer
R/W	: Red with White tracer	W/B	: White with Black tracer
W/Bl	: White with Blue tracer	W/G	: White with Green tracer
W/R	: White with Red tracer	W/Y	: White with Yellow tracer
Y/B	: Yellow with Black tracer	Y/Bl	: Yellow with Blue tracer
Y/G	: Yellow with Green tracer	Y/R	: Yellow with Red tracer
Y/W	: Yellow with White tracer		

GENERAL INFORMATION

1

CONTENTS

COUNTRY AND AREA CODE

The following code stands for the applicable country(-ies) and area(-s).

CODE	COUNTRY or AREA
P-02	U.K.
P-19	E.U.

WARNING/CAUTION/NOTE

Please read this manual and follow its instructions carefully. To emphasize special information, the symbol and the words WARNING, CAUTION and NOTE have special meanings. Pay special attention to the messages highlighted by these signal words.

⚠ WARNING

Indicates a potential hazard that could result in death or injury.

CAUTION

Indicates a potential hazard that could result in motorcycle damage.

NOTE:
Indicates special information to make maintenance easier or instructions clearer.

Please note, however, that the warnings and cautions contained in this manual cannot possibly cover all potential hazards relating to the servicing, or lack of servicing, of the motorcycle. In addition to the WARNINGS and CAUTIONS stated, you must use good judgement and basic mechanical safety principles. If you are unsure about how to perform a particular service operation, ask a more experienced mechanic for advice.

GENERAL PRECAUTIONS

⚠ WARNING

* **Proper service and repair procedures are important for the safety of the service mechanic and the safety and reliability of the motorcycle.**
* **When 2 or more persons work together, pay attention to the safety of each other.**
* **When it is necessary to run the engine indoors, make sure that exhaust gas is forced outdoors.**
* **When working with toxic or flammable materials, make sure that the area you work in is well-ventilated and that you follow all of the material manufacturer's instructions.**
* **Never use gasoline as a cleaning solvent.**
* **To avoid getting burned, do not touch the engine, engine oil, radiator and exhaust system until they have cooled.**
* **After servicing the fuel, oil, water, exhaust or brake systems, check all lines and fittings related to the system for leaks.**

CAUTION

* If parts replacement is necessary, replace the parts with Suzuki Genuine Parts or their equivalent.
* When removing parts that are to be reused, keep them arranged in an orderly manner so that they may be reinstalled in the proper order and orientation.
* Be sure to use special tools when instructed.
* Make sure that all parts used in reassembly are clean. Lubricate them when specified.
* Use the specified lubricant, bond, or sealant.
* When removing the battery, disconnect the negative cable first and then the positive cable.
* When reconnecting the battery, connect the positive cable first and then the negative cable, and replace the terminal cover on the positive terminal.
* When performing service to electrical parts, if the service procedures do not require use of battery power, disconnect the negative cable from the battery.
* When tightening the cylinder head or case bolts and nuts, tighten the larger sizes first. Always tighten the bolts and nuts diagonally from the inside toward outside and to the specified tightening torque.
* Whenever you remove oil seals, gaskets, packing, O-rings, locking washers, self-locking nuts, cotter pins, circlips and certain other parts as specified, be sure to replace them with new ones. Also, before installing these new parts, be sure to remove any left over material from the mating surfaces.
* Never reuse a circlip. When installing a new circlip, take care not to expand the end gap larger than required to slip the circlip over the shaft. After installing a circlip, always ensure that it is completely seated in its groove and securely fitted.
* Use a torque wrench to tighten fasteners to the specified torque. Wipe off grease and oil if a thread is smeared with them.
* After reassembling, check parts for tightness and proper operation.

* To protect the environment, do not unlawfully dispose of used motor oil, engine coolant and other fluids: batteries and tires.
* To protect Earth's natural resources, properly dispose of used motorcycle and parts.

SUZUKI UH125K7 (’07-MODEL)

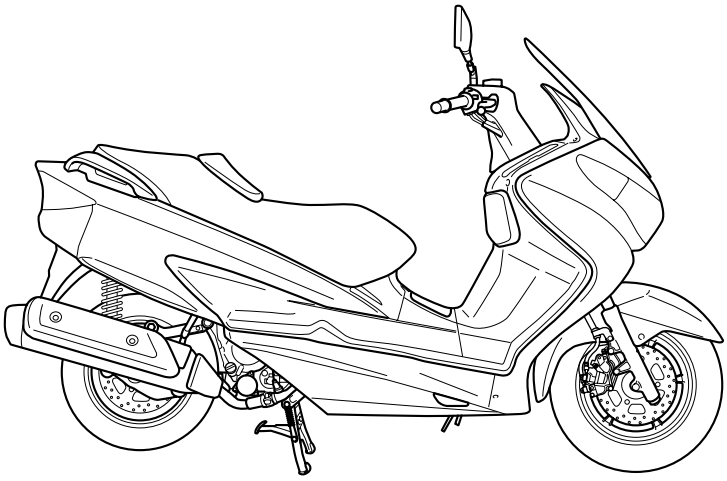

RIGHT SIDE

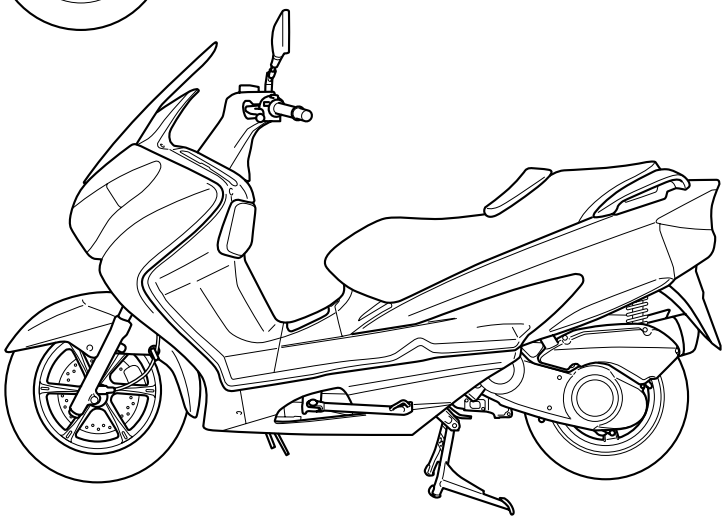

LEFT SIDE

- Difference between illustrations and actual motorcycle may exist depending on the markets.

SERIAL NUMBER LOCATION

The frame serial number or V.I.N. (Vehicle Identification Number) ① is stamped on the right side of the frame. The engine serial number ② is located on the crankcase. These numbers are required especially for registering the machine and ordering spare parts.

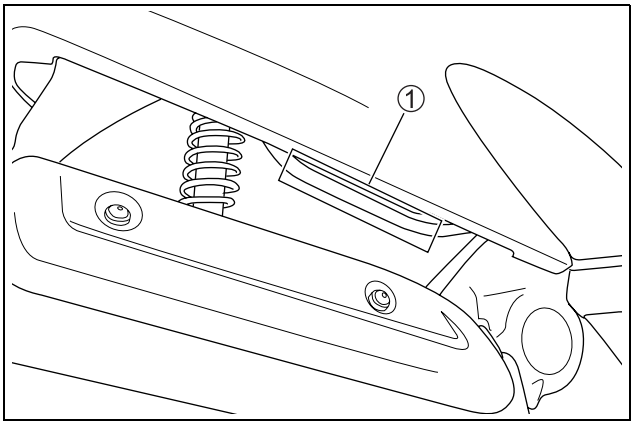

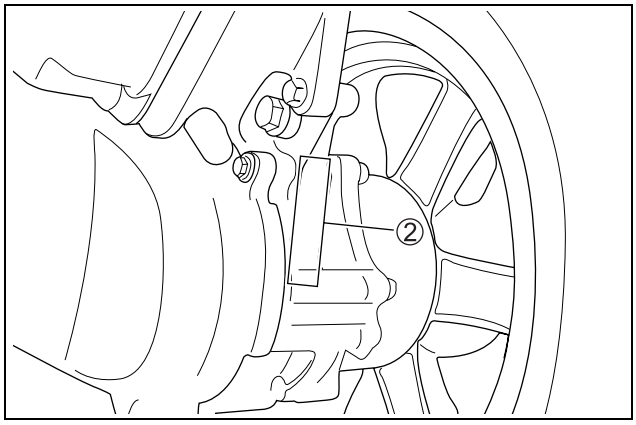

FUEL, OIL AND ENGINE COOLANT RECOMMENDATION

FUEL

Gasoline used should be graded 91 octane (Research Method) or higher. Unleaded gasoline is recommended.

ENGINE OIL AND FINAL GEAR OIL

Oil quality is a major contributor to your engine's performance and life. Always select good quality engine oil. Use of SF/SG or SH/SJ in API classification with MA in JASO.
Suzuki recommends the use of SAE 10W-40 engine oil. If SAE 10W-40 engine oil is not available, select an alternative according to the right chart.

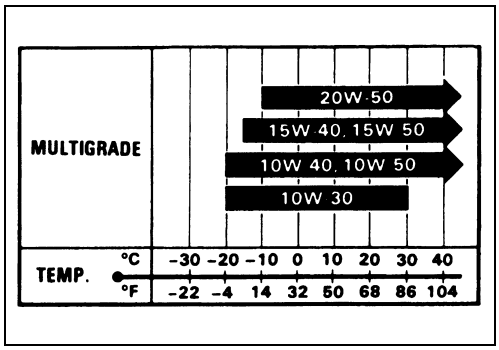

BRAKE FLUID

Specification and classification: DOT 4

⚠ WARNING

Since the brake system of this motorcycle is filled with a glycol-based brake fluid by the manufacturer, do not use or mix different types of fluid such as silicone-based and petroleum-based fluid for refilling the system, otherwise serious damage will result.
Do not use any brake fluid taken from old or used or unsealed containers.
Never re-use brake fluid left over from a previous servicing, which has been stored for a long period.

FRONT FORK OIL

Use fork oil G-10 or an equivalent fork oil.

ENGINE COOLANT

Use an anti-freeze/engine coolant compatible with an aluminum radiator, mixed with distilled water only.

WATER FOR MIXING

Use distilled water only. Water other than distilled water can corrode and clog the aluminum radiator.

ANTI-FREEZE/ENGINE COOLANT

The engine coolant performs as a corrosion and rust inhibitor as well as anti-freeze. Therefore, the engine coolant should be used at all times even though the atmospheric temperature in your area does not go down to freezing point.

Suzuki recommends the use of SUZUKI COOLANT anti-freeze/engine coolant. If this is not available, use an equivalent which is compatible with an aluminum radiator.

LIQUID AMOUNT OF WATER/ENGINE COOLANT

Solution capacity (total): Approx. 1 600 ml

For engine coolant mixture information, refer to cooling system section in page 7-2.

CAUTION

Mixing of anti-freeze/engine coolant should be limited to 60%. Mixing beyond it would reduce its efficiency. If the anti-freeze/engine coolant mixing ratio is below 50%, rust inhabiting performance is greatly reduced. Be sure to mix it above 50% even though the atmospheric temperature does not go down to the freezing point.

BREAK-IN PROCEDURES

During manufacture only the best possible materials are used and all machined parts are finished to a very high standard but it is still necessary to allow the moving parts to “BREAK-IN” before subjecting the engine to maximum stresses. The future performance and reliability of the engine depends on the care and restraint exercised during its early life. The general rules are as follows.

- Keep to these break-in procedures:

Initial 800 km: Less than 1/2 throttle
Up to 1 600 km: Less than 3/4 throttle

- Upon reaching an odometer reading of 1 600 km you can subject the motorcycle to full throttle operation.
- Do not maintain constant engine speed for an extended time period during any portion of the break-in. Try to vary the throttle position.

SPECIFICATIONS

DIMENSIONS AND DRY MASS

Overall length	2 055 mm
Overall width	740 mm
Overall height	1 240 mm
Wheelbase	1 465 mm
Ground clearance	130 mm
Seat height	735 mm
Dry mass	148 kg

ENGINE

Type	Four stroke, liquid-cooled, OHC
Number of cylinders	1
Bore	57.0 mm
Stroke	48.8 mm
Displacement	125 cm^3
Compression ratio	11.6 : 1
Fuel system	Fuel injection
Air cleaner	Polyurethane foam element & Nonwoven fabric element
Starter system	Electric
Lubrication system	Wet sump
Idle speed	1 800 ± 100 r/min

DRIVE TRAIN

Clutch	Dry shoe, automatic, centrifugal type
Gearshift pattern	Automatic
Reduction ratio	Variable change (2.829 – 0.744)
Final reduction ratio	9.166 (44/16 × 50/15)
Drive system	V-belt drive

CHASSIS

Front suspension	Telescopic, coil spring, oil damped
Rear suspension	Swingarm type, coil spring, oil damped
Front fork stroke	92 mm
Rear wheel travel	83 mm
Caster	27°
Trail	93 mm
Steering angle	40° (right and left)
Turning radius	2.5 m
Front brake	Disc brake
Rear brake	Disc brake
Front tire size	110/90-13M/C 56P, tubeless
Rear tire size	130/70-12 62P, tubeless

ELECTRICAL

Ignition type	Electronic ignition (Transistorized)
Ignition timing	10° B.T.D.C. at 1 800 r/min
Spark plug	NGK CR8E or DENSO U24ESR-N
Battery	12 V 28.8 kC (8 Ah)/10 HR
Generator	Three-phase A.C. generator
Main fuse	30 A
Fuse	10/10/10/10/10/15 A
Headlight	12 V 55 W × 2
Position light	12 V 5 W × 2
Brake light/Taillight	12 V 21/5 W × 2
License plate light	12 V 5 W
Trunk box light	12 V 3.4 W
Turn signal light	12 V 21 W × 2 (Front) 12 V 16 W × 2 (Rear)
Speedometer light	12 V 1.2 W
Coolant temperature meter light	12 V 1.2 W
Fuel level meter light	12 V 1.2 W
Turn signal indicator light	12 V 2 W × 2
High beam indicator light	12 V 2 W
FI indicator light	12 V 2 W
Oil change indicator light	LED

CAPACITIES

Fuel tank		11.0 L
Engine oil,	oil change	1 200 ml
	with filter change	1 300 ml
	overhaul	1 500 ml
Final gear oil,	oil change	150 ml
	overhaul	160 ml
Coolant		1.6 L

PERIODIC MAINTENANCE

CONTENTS

PERIODIC MAINTENANCE SCHEDULE

The chart below lists the recommended intervals for all the required periodic service work necessary to keep the motorcycle operating at peak performance and economy. Mileages are expressed in terms of kilometer and time for your convenience.

NOTE:
More frequent servicing may be performed on motorcycles that are used under severe conditions.

PERIODIC MAINTENANCE CHART

Item \ Interval		km	1 000	4 000	8 000
		miles	600	2 500	5 000
		months	3	20	40
Air cleaner element	Polyurethane foam element		Clean every 3 000 km (2 000 miles)		
	Non-woven fabric element		—	I	I
			Replace every 12 000 km (7 000 miles)		
Cooling fan filter			Clean every 3 000 km (2 000 miles)		
Exhaust pipe nuts and muffler bolts			T	T	T
Valve clearance			I	I	I
Spark plug			—	I	R
Fuel line			—	I	I
Engine oil			R	R	R
Engine oil filter			R	—	R
Final gear box oil			—	—	I
Throttle cable play			I	I	I
Engine coolant			Replace every 2 years		
Radiator hose			—	I	I
Drive V-belt			—	I	I
Brakes			I	I	I
Brake fluid			—	I	I
			Replace every 2 years		
Brake hose			—	I	I
			Replace every 4 years		
Tires			—	I	I
Steering			I	—	I
Front fork			—	—	I
Rear suspension			—	—	I
Chassis bolts and nuts			T	T	T

NOTE:
I = Inspect and clean, adjust, replace or lubricate as necessary, R = Replace, T = Tighten

LUBRICATION POINTS

Proper lubrication is important for smooth operation and long life of each working part of the motorcycle. Major lubrication points are indicated below.

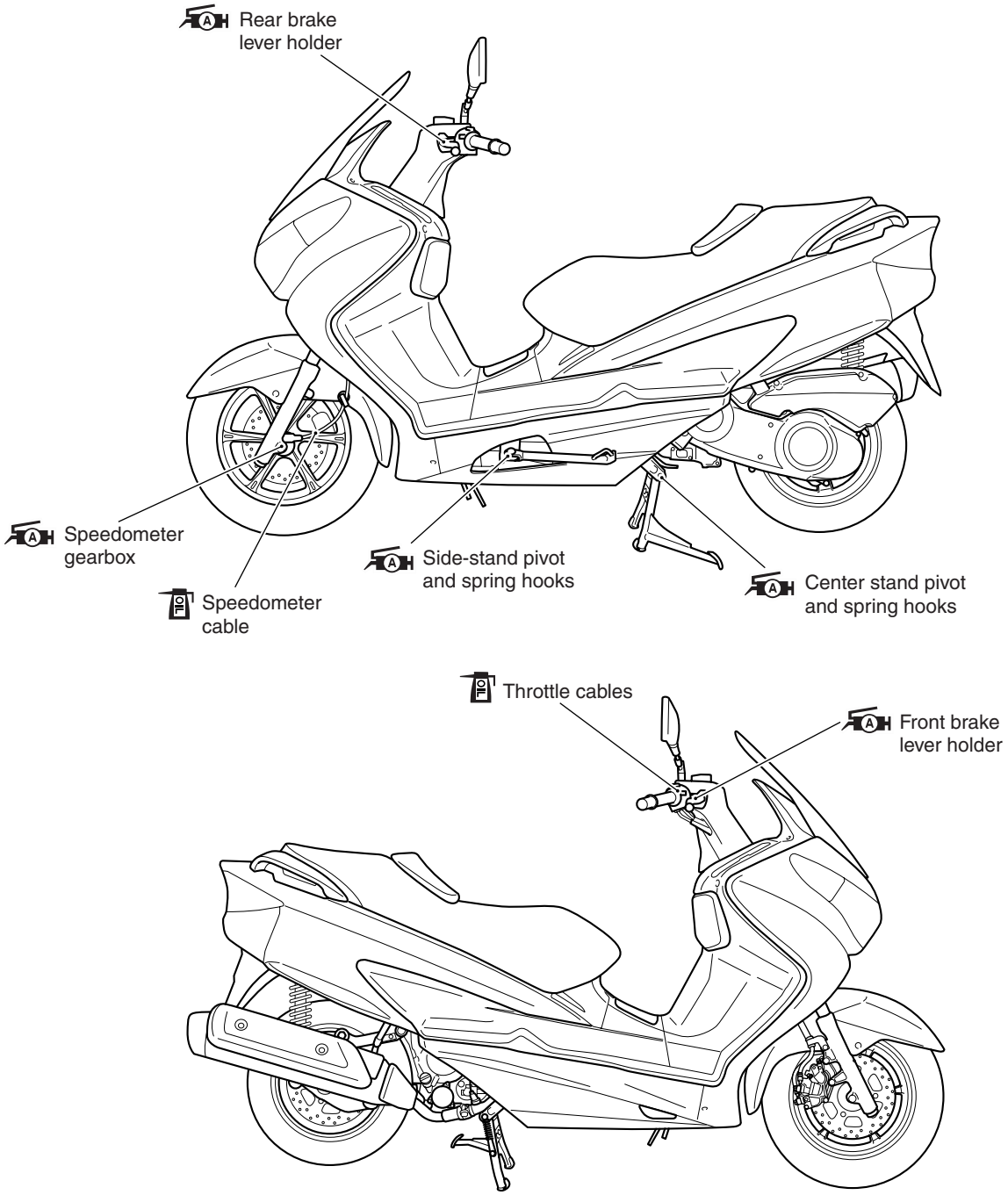

NOTE:

* *Before lubricating each part, clean off any rusty spots and wipe off any grease, oil, dirt or grime.*
* *Lubricate exposed parts which are subject to rust, with a rust preventative spray whenever the motorcycle has been operated under wet or rainy conditions.*

MAINTENANCE AND TUNE-UP PROCEDURES

This section describes the servicing procedures for each item of the Periodic Maintenance requirements.

AIR CLEANER

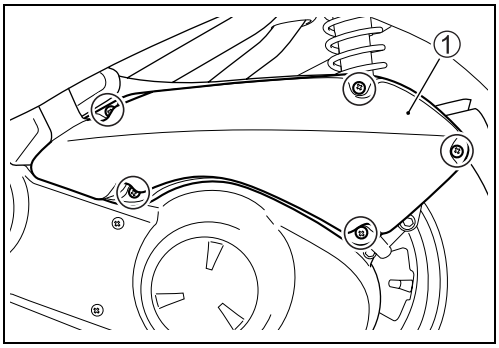

(POLYURETHANE FOAM ELEMENT)
Clean every 3 000 km (2 000 miles).

(NON-WOVEN FABRIC ELEMENT)
Inspect every 4 000 km (2 500 miles, 20 months) and replace every 12 000 km (7 000 miles).

REMOVAL

- Remove the air cleaner cover ①.
- Remove the polyurethane foam element ②.

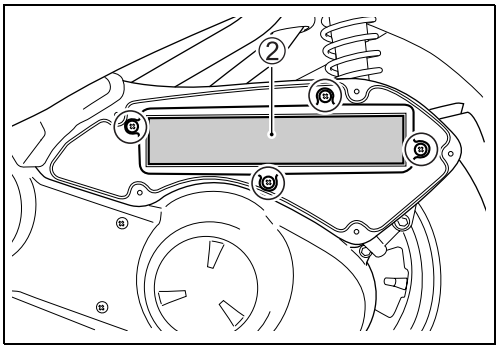

- Remove the non-woven fabric element ③.

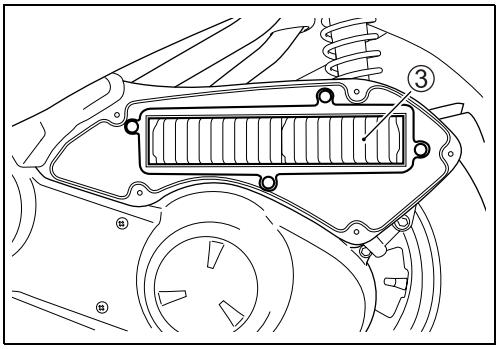

CLEANING

Polyurethane foam element

- Fill a washing pan of a proper size with a non-flammable cleaning solvent. Immerse the element in the cleaning solvent and wash it.
- Gently squeeze the element to remove the excess solvent: do not twist or wring the element or it will develop tears.
- Immerse the element in motor oil and squeeze out the excess oil. The element should be wet but not dripping.

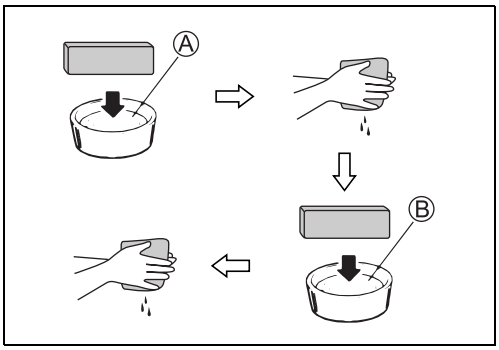

Ⓐ: Non-flammable cleaning solvent
Ⓑ: Motor oil SAE #30 or SAE 10W-40

CAUTION

Torn element must be replaced.

- Reinstall the cleaned or new element in the reverse order of removal.

INSPECTION

Non-woven fabric element

- Inspect the element for clogging.
  If the element is clogged with dust, replace the element with a new one.

CAUTION

Do not blow the element with compressed air.

NOTE:
If driving under dusty conditions, replace the air cleaner elements more frequently. Make sure that the air cleaner elements are in good condition at all times. The life of the engine depends largely on these components.

- Remove the drain plug from the air cleaner box to allow any water to drain out.

COOLING FAN FILTER

Clean every 3 000 km (2 000 miles).

- Remove the cooling fan cover ①.
- Remove the cooling fan filter ②.
- Clean the fan filter in the same manner of the polyurethane foam air cleaner element. (☞2-4)
- Reinstall the cleaned or new filter in the reverse order of removal.

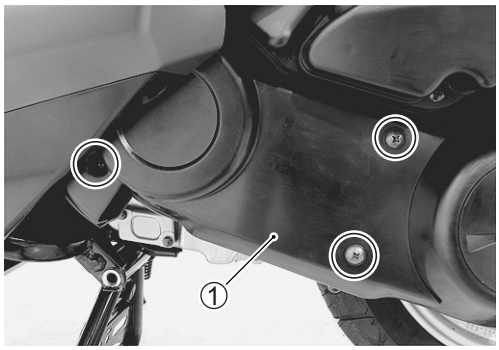

CAUTION

Do not apply engine oil to the filter after cleaning it.

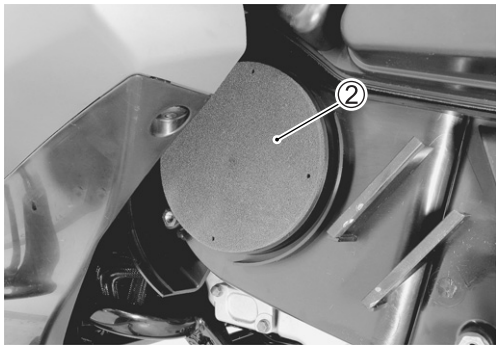

EXHAUST PIPE NUTS AND MUFFLER BOLTS

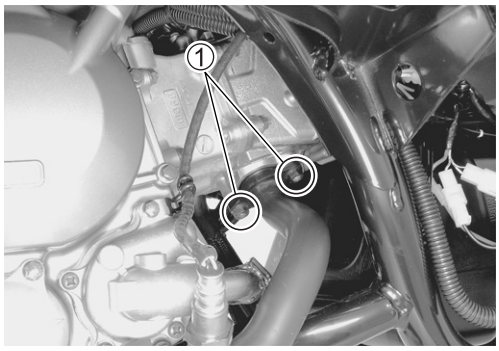

Tighten initially at 1 000 km (600 miles, 3 months) and every 4 000 km (2 500 miles, 20 months) thereafter.

- Remove the right side leg shield. (☞8-8)
- Remove the rear lower leg shield. (☞8-8)
- Tighten the exhaust pipe nuts ①, muffler mounting bolts ② and muffler connecting bolt ③ to the specified torque.

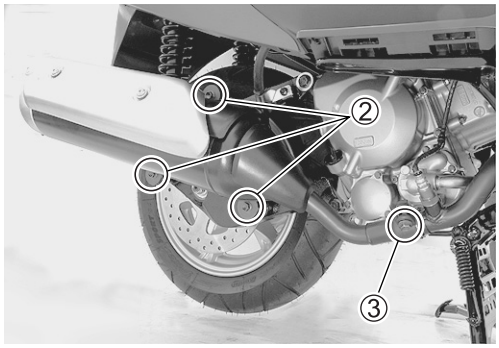

Exhaust pipe nut: 23 N·m (2.3 kgf-m)
Muffler mounting bolt: 23 N·m (2.3 kgf-m)
Muffler connecting bolt: 23 N·m (2.3 kgf-m)

VALVE CLEARANCE

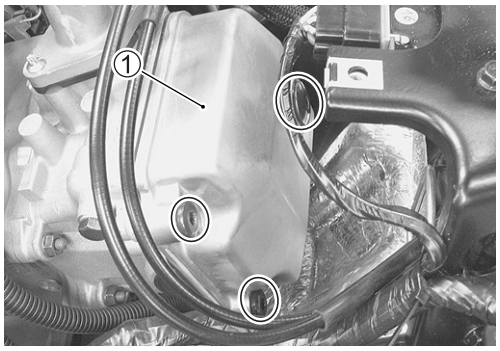

Inspect initially at 1 000 km (600 miles, 3 months) and every 4 000 km (2 500 miles, 20 months) thereafter.

REMOVAL

- Remove the trunk box. (☞8-11)
- Remove the cooling fan cover and cooling fan filter. (☞2-5)
- Remove the spark plug. (☞2-7)
- Remove the cylinder head cover ①.

INSPECTION

The valve clearance specification is different for intake and exhaust valves. Valve clearance adjustment must be checked and adjusted, 1) at the time of periodic inspection, 2) when the valve mechanism is serviced, and 3) when the camshaft is disturbed by removing it for servicing.

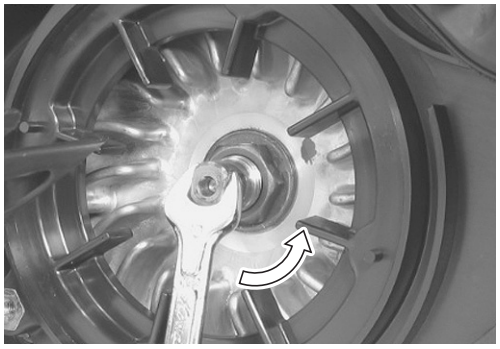

DATA **Valve clearance (when cold):**
Standard: IN. : 0.05 – 0.10 mm
EX. : 0.17 – 0.22 mm

NOTE:
* *The piston must be at "TDC" on the compression stroke in order to check the valve clearance or to adjust valve clearance.*
* *The clearance specification is for COLD state.*
* *To turn the crankshaft for clearance checking, and rotate in the normal running direction.*

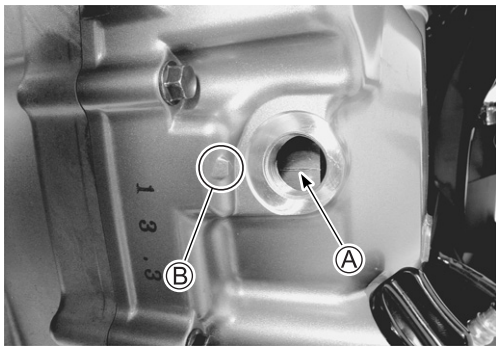

- Turn the crankshaft to bring the "TDC" line Ⓐ on the generator rotor to the index mark Ⓑ on the generator cover.

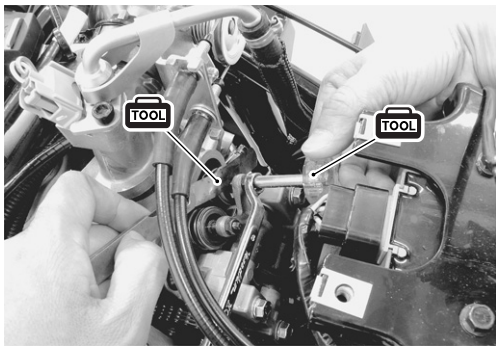

- Insert the thickness gauge between the valve stem end and the adjusting screw on the rocker arm.
  If the clearance is out of specification, bring it into the specified range.

TOOL 09900-20803: Thickness gauge
09917-14910: Valve clearance adjusting driver

Valve adjusting screw lock-nut: 10 N·m (1.0 kgf-m)

- Install the cylinder head cover. (☞3-71)

SPARK PLUG

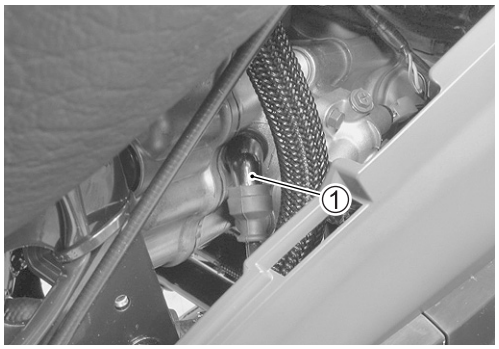

Inspect every 4 000 km (2 500 miles, 20 months) and replace every 8 000 km (5 000 miles, 40 months) thereafter.

REMOVAL
- Remove the front frame cover. (☞8-8)
- Disconnect the spark plug cap ①.
- Remove the spark plug.

TOOL 09930-10121: Spark plug wrench set

	Standard	Cold type	Hot type
NGK	CR8E	CR9E	CR7E
DENSO	U24ESR-N	U27ESR-N	U22ESR-N

CARBON DEPOSIT
Inspect the carbon deposit on the plug.
If the carbon is deposited, remove it with a spark plug cleaner machine.

SPARK PLUG GAP

Measure the plug gap with the thickness gauge if it is correct. If not, adjust it to the following gap.

DATA Spark plug gap Ⓐ:
Standard: 0.7 – 0.8 mm

TOOL 09900-20803: Thickness gauge

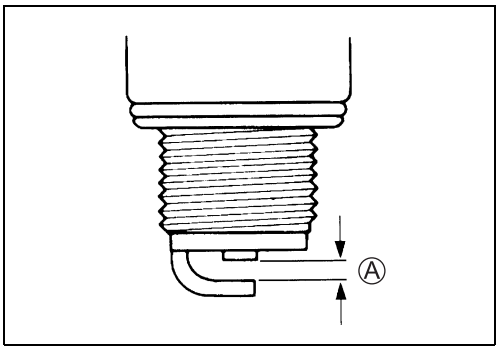

ELECTRODE'S CONDITION

Inspect the worn or burnt condition of the electrodes. If it is extremely worn or burnt, replace the plug. And also replace the plug if it has a broken insulator, damaged thread, etc.

CAUTION

Confirm the thread size and reach when replacing the plug. If the reach is too short, carbon will be deposited on the screw portion of the plug hole and engine damage may result.

INSTALLATION

CAUTION

Before using a spark plug wrench, carefully turn the spark plug by finger into the threads of the cylinder head to prevent damage the aluminum threads.

- Install the spark plug to the cylinder head by finger tight, and then tighten it to the specified torque.

Spark plug: 11 N·m (1.1 kgf-m)

FUEL LINE

Inspect every 4 000 km (2 500 miles, 20 months) thereafter.

Inspect the fuel hoses for damage and fuel leakage. If any defects are found, the fuel hoses must be replaced.

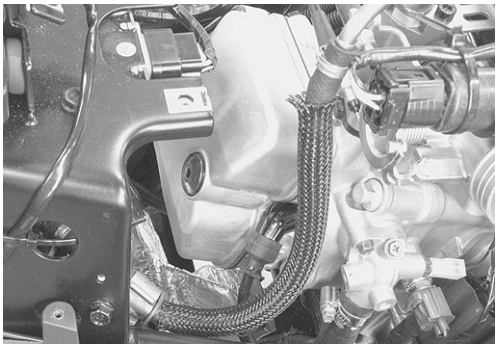

ENGINE OIL AND OIL FILTER

(ENGINE OIL)
Replace Initially at 1 000 km (600 miles, 3 months) and every 4 000 km (2 500 miles, 20 months) thereafter.

(OIL FILTER)
Replace Initially at 1 000 km (600 miles, 3 months) and every 8 000 km (5 000 miles, 40 months) thereafter.

Oil charge should be performed while the engine is warm. Oil filter replacement at the above intervals should be done together with the engine oil change.

ENGINE OIL REPLACEMENT

- Place the motorcycle on the center stand.
- Place an oil pan below the engine, and drain the oil by removing the filler cap ① and drain plug ②.
- Tighten the drain plug ② to the specified torque and pour fresh oil through the oil filler. The engine will hold about 1 300 ml of oil. Use oil of SF/SG or SH/SJ in API with MA in JASO.

Drain plug: 23 N·m (2.3 kgf-m)

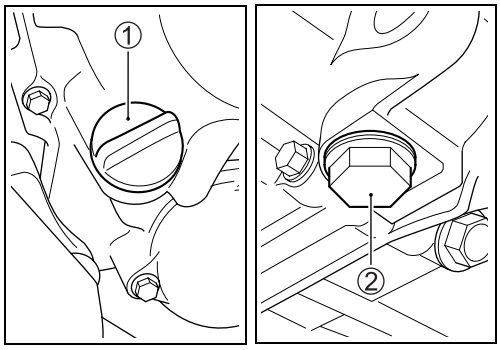

- Install the filler cap ①.
- Start up the engine and allow it to run about three minutes at idling speed.
- Turn off the engine and wait about three minutes.
- Check the engine oil level with the engine oil dipstick. The dipstick comes out together with the oil filler cap as shown. The level found in the dipstick should be between “L” (low) and “F” (full) lines.
- Remove the filler cap ①.
- Wipe the oil from the dipstick with a clean rag.
- Release the center stand. Holding the motorcycle vertically, reinsert the dipstick until the threads touch the filler neck, but do not to screw the cap in.
- Draw out the dipstick and check the oil level.
- If the level is below mark “L”, add oil to “F” level.
- If the level is above mark “F”, drain oil to “F” level.

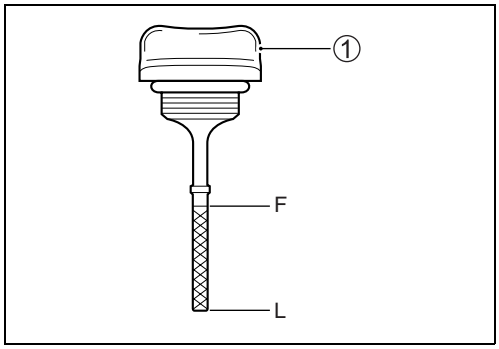

OIL FILTER REPLACEMENT

- Drain engine oil.
- Remove the oil filter cap ①.
- Remove the oil filter ②.

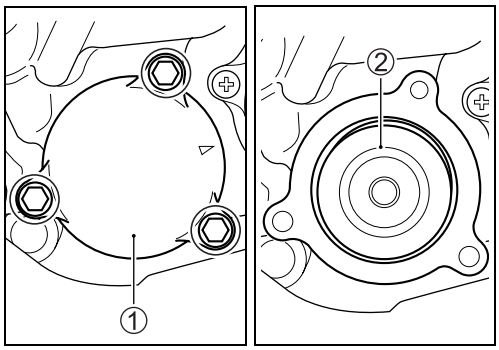

- Replace the O-ring ③ with a new one.
- Install new oil filter.

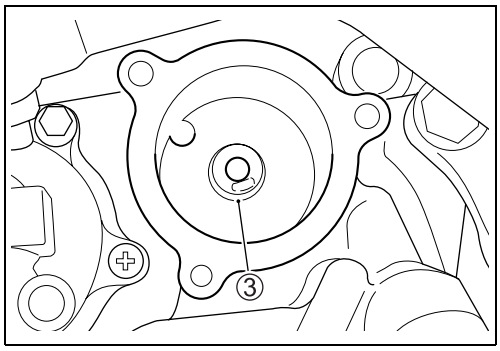

- Install the spring ④ to the oil filter cap.
- Replace the O-ring ⑤ with a new one.

NOTE:
Apply engine oil to the new O-ring ⑤.

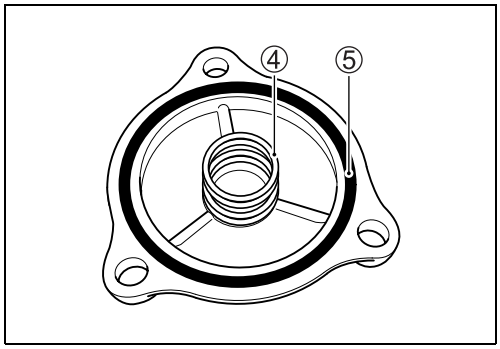

- Install the oil filter cap.
- Pour fresh oil.
- Check the oil level.

DATA Engine oil capacity

Oil change	**: 1 200 ml**
Filter change	**: 1 300 ml**
Overhaul engine	**: 1 500 ml**

FINAL GEAR BOX OIL

Inspect every 8 000 km (5 000 miles, 40 months) thereafter.

- Remove the cooling fan cover. (☞2-5)
- Remove the bolts and then move the air cleaner box upward.

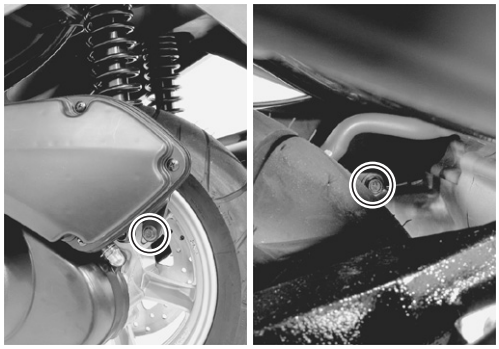

- Remove the clutch cover ①.
- Place an oil pan below the final gear case.
- Remove the oil level plug ② and inspect the oil level. If the level is below the level hole, add oil until it flows out from the level hole.

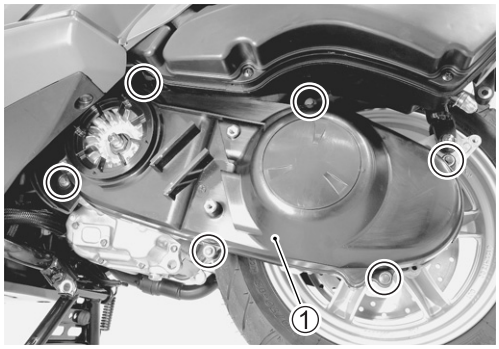

DATA Oil viscosity and classification:
SAE 10W-40 with SF or SG

- Tighten the oil level plug ② to the specified torque.

Oil level plug: 12 N·m (1.2 kgf-m)

NOTE:
If oil is dirty with sludge or used for a long period, drain the oil by removing the drain plug ③ and pour fresh oil through the oil level hole.

Oil drain plug: 12 N·m (1.2 kgf-m)

DATA Final gear box oil capacity
Oil change : 150 ml
Overhaul : 160 ml

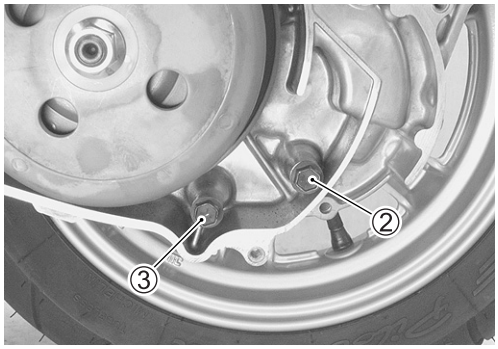

THROTTLE CABLE PLAY

Inspect initially at 1 000 km (600 miles, 3 months) and every 4 000 km (2 500 miles, 20 months) thereafter.

- Adjust the throttle cable play Ⓐ as follows.

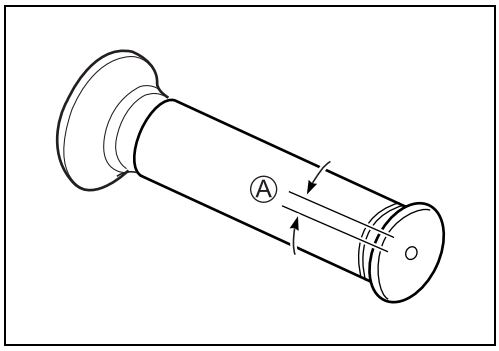

- Loosen the lock-nut ①.
- Turn the adjuster ② in or out until the throttle cable play (at the throttle grip) Ⓐ is between 2.0 – 4.0 mm.
- Tighten the lock-nut ① while holding the adjuster ②.

DATA Throttle cable play Ⓐ: 2.0 – 4.0 mm

⚠ WARNING

After the adjustment is completed, check that handlebars movement does not raise the engine idle speed and that the throttle grip returns smoothly and automatically.

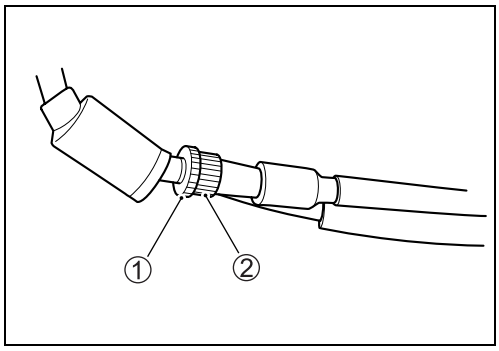

COOLING SYSTEM

(RADIATOR HOSE)
Inspect every 4 000 km (2 500 miles, 20 months).

(ENGINE COOLANT)
Replace engine coolant every 2 years.

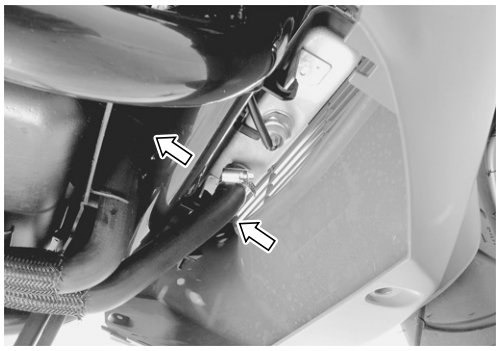

RADIATOR HOSE

- Remove the rear lower leg shield. (☞8-8)
- Inspect the radiator hoses for crack, damage or engine coolant leakage.
  If any defects are found, replace the radiator hose with a new one.

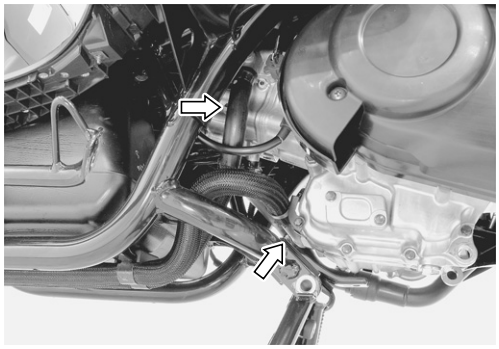

ENGINE COOLANT LEVEL CHECK

- Keep the motorcycle upright.
- Open the lid ①.

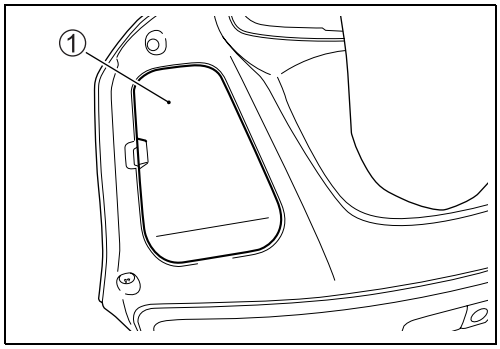

- Check the engine coolant level by observing the “F” (Full) and “L” (Lower) lines on the engine coolant reservoir.
- If the level is below the L line, remove the reservoir cap ② and add engine coolant to the F line.

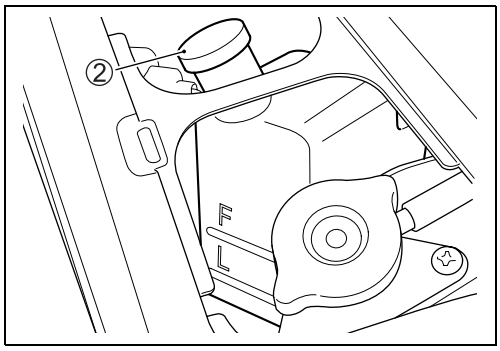

ENGINE COOLANT CHANGE

- Remove the rear lower leg shield. (☞8-8)
- Remove the radiator cap ①.
- Drain engine coolant by disconnecting the radiator outlet hose ②.

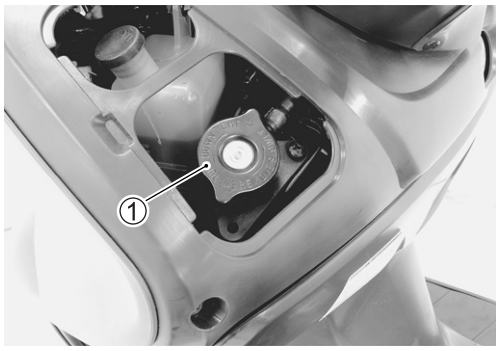

⚠ WARNING

> *** Do not open the radiator cap when the engine is hot, as you may be injured by escaping hot liquid or vapor.**
>
> *** Engine coolant may be harmful if swallowed or if it comes in contact with skin or eyes. If engine coolant gets into the eyes or in contact with the skin, flush thoroughly with plenty of water. If swallowed, induce vomiting and call physician immediately.**

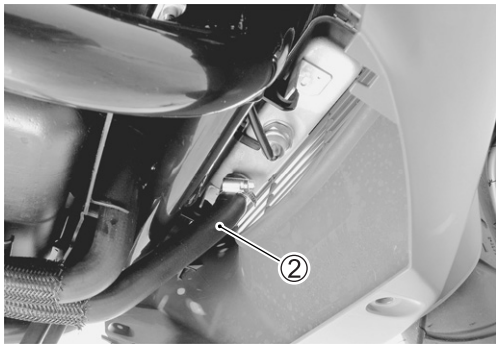

- Flush the radiator with fresh water if necessary.

- Pour the specified engine coolant up to the radiator inlet.
- Bleed the air from the engine coolant circuit. (☞2-13)

NOTE:
For engine coolant information, refer to page 7-2.

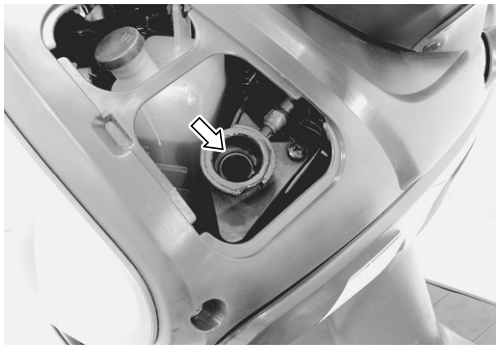

AIR BLEEDING FOR THE COOLING CIRCUIT

- Add engine coolant up to the radiator inlet.
- Slowly swing the motorcycle, right and left, to bleed the air trapped in the cooling circuit.
- Add engine coolant up to the radiator inlet.
- Start up the engine and bleed air from the radiator inlet completely.
- Add engine coolant up to the radiator inlet.
- Repeat the above procedures until no air bled from the radiator inlet.

- Remove the trunk box. (☞8-11)
- Check that the engine coolant flows out when loosening the air bleeder screws ① and ②.
- Tighten the air bleeder screws securely.
- Close the radiator cap securely.
- After warming up and cooling down the engine several times, add the engine coolant up to the full level of the reservoir.

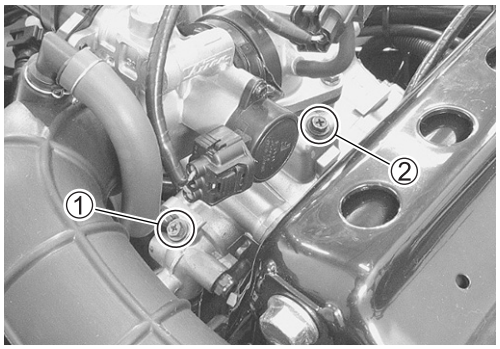

CAUTION

Repeat these procedures several times and make sure that the radiator is filled with engine coolant up to the reservoir full level.

LLC **Engine coolant capacity:**

Engine side	**: 1 350 ml**
Reservoir side	**: 250 ml**

DRIVE V-BELT

Inspect every 4 000 km (2 500 miles, 20 months) thereafter.

- Remove the clutch cover. (☞2-10)
- Check the contacting surface of drive V-belt for crack or other damage. If crack or other damage exists, replace the drive V-belt with a new one.

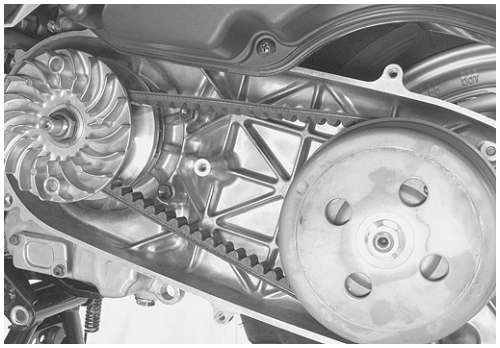

CAUTION

If grease or oil is present on the surface, degrease the drive V-belt thoroughly.

BRAKE SYSTEM

(BRAKE)
Inspect Initially at 1 000 km (600 miles, 3 months) and every 4 000 km (2 500 miles, 20 months) thereafter.

(BRAKE HOSE AND BRAKE FLUID)
Inspect Every 4 000 km (2 500 miles, 20 months). Replace hoses every 4 years. Replace fluid every 2 years.

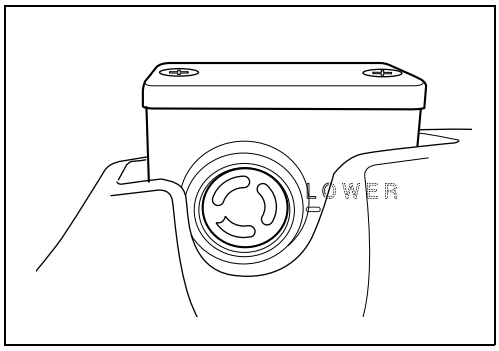

BRAKE FLUID LEVEL CHECK

- Keep the motorcycle upright and handlebars straight.
- Check the brake fluid level by observing the lower limit line on the front and combination brake fluid reservoirs.
- When the level is below the lower limit line, replenish with brake fluid that meets the following specification.

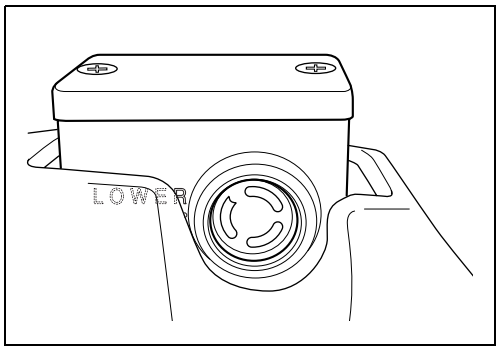

Specification and classification: DOT 4

WARNING

The brake system of this motorcycle is filled with a glycol-based brake fluid. Do not use or mix different types of fluid such as silicone-based or petroleum-based. Do not use any brake fluid taken from old, used or unsealed containers. Never re-use brake fluid left over from the last servicing or stored for a long period.

WARNING

Brake fluid, if it leaks, will interfere with safe running and immediately discolor painted surfaces. Check the brake hoses and hose joints for cracks and oil leakage before riding.

FRONT BRAKE PAD WEAR

The extent of the brake pad wear can be checked by observing the remain of the wear limit Ⓐ. When the wear exceeds the wear limit, replace the pads with new ones.

CAUTION

Replace the brake pad as a set, otherwise braking performance will be adversely affected.

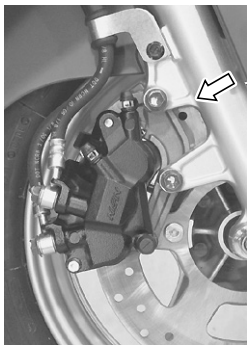

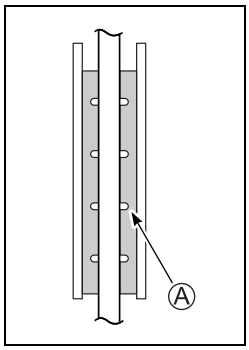

FRONT BRAKE PAD REPLACEMENT

- Loosen the brake pad pin ①.
- Remove the brake hose clamp bolt ②.
- Remove the front brake caliper ③.

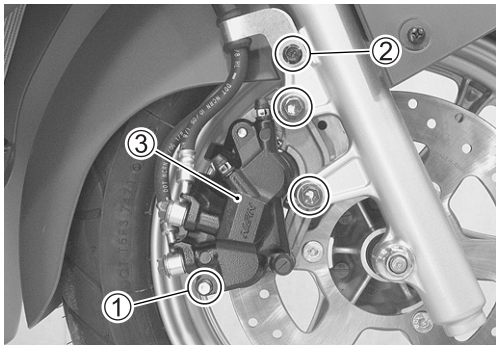

- Remove the brake pads ④ by removing the brake pad bolt.
- Install new pads and the caliper in the reverse order of removal.

Brake pad bolt: 18 N·m (1.8 kgf-m)
Front brake caliper mounting bolt: 26 N·m (2.6 kgf-m)

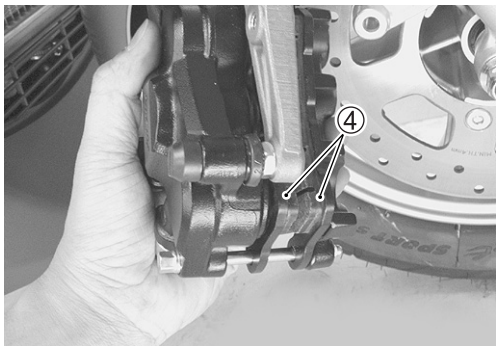

REAR BRAKE PAD WEAR

The extent of the brake pad wear can be checked by observing the remain of the wear limit Ⓐ. When the wear exceeds the wear limit, replace the pads with new ones.

CAUTION

Replace the brake pad as a set, otherwise braking performance will be adversely affected.

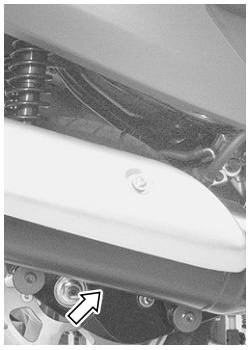

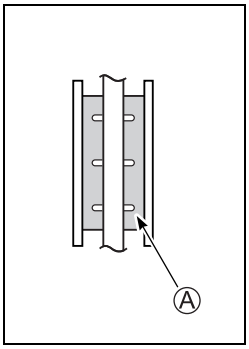

REAR BRAKE PAD REPLACEMENT

- Remove the muffler. (☞6-2)
- Remove the brake caliper ①.

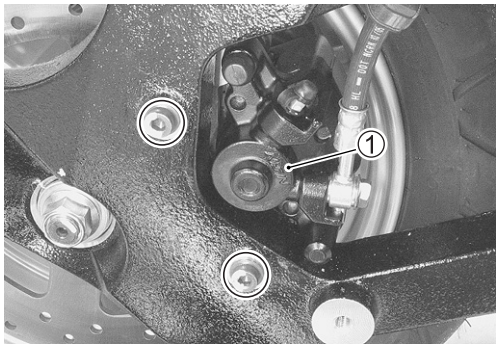

- Remove the brake pads ② by removing the brake pad bolts ③.
- Install new pads and the caliper in the reverse order of removal.

Brake pad bolt: 18 N·m (1.8 kgf-m)
Rear brake caliper mounting bolt: 26 N·m (2.6 kgf-m)

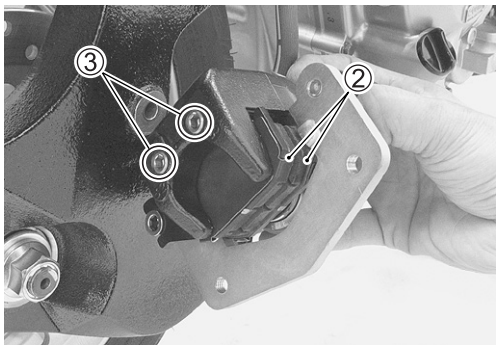

FRONT BRAKE FLUID REPLACEMENT

- Place the motorcycle on a level ground and keep the handlebars straight.
- Remove the front master cylinder reservoir cap and diaphragm.
- Suck up old brake fluid as much as possible.
- Fill the reservoir with new brake fluid.

Specification and classification: DOT 4

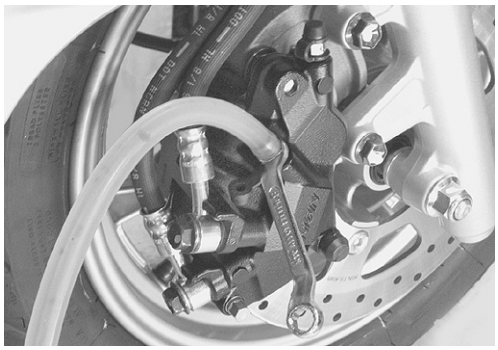

- Connect a clear hose to the air bleeder valve and insert the other end of the hose into a receptacle.
- Loosen the air bleeder valve and pump the brake lever until old brake fluid is completely out of the brake system.
- Close the air bleeder valve and disconnect the clear hose. Fill the reservoir with new brake fluid to the upper end of the inspection window.

Air bleeder valve: 6 N·m (0.6 kgf-m)

NOTE:
Front brake caliper has two air bleeder valves.

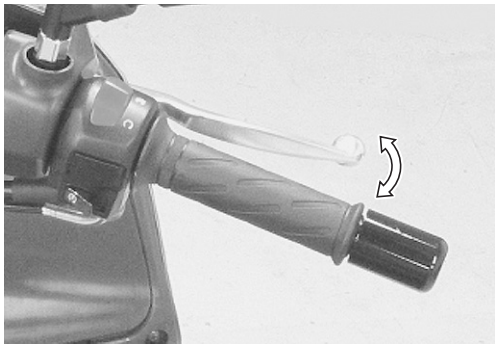

COMBINATION BRAKE FLUID REPLACEMENT

The combination brake fluid replacement is the same manner as the front one.

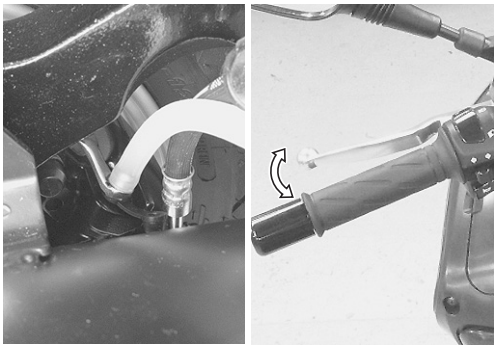

AIR BLEEDING FOR THE FRONT BRAKE FLUID CIRCUIT

Air trapped in the fluid circuit acts like a cushion to absorb a large proportion of the pressure developed by the master cylinder and thus interferes with the full braking performance of the brake caliper. The presence of air is indicated by “sponginess” of the brake lever and also by lack of braking force. Considering the danger to which such trapped air exposes the machine and rider, it is essential that, after remounting the brake and restoring the brake system to the normal condition, the brake fluid circuit be purged of air in the following manner:

- Fill up the master cylinder reservoir to the “UPPER” line. Place the reservoir cap to prevent entry of dirt.

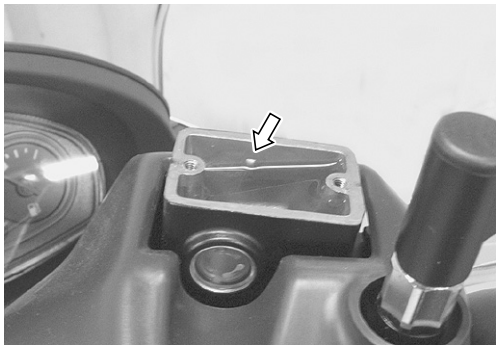

CAUTION

Handle brake fluid with care: the fluid reacts chemically with paint, plastics, rubber materials and so on.

- Connect a clear hose to the air bleeder valve, and insert the free end of the pipe into a receptacle.

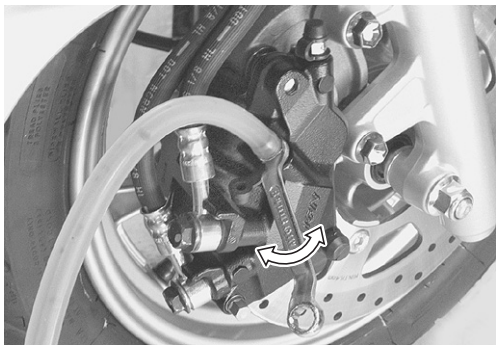

- Squeeze and release the brake lever several times in rapid succession and squeeze the lever fully without releasing it. Loosen the bleeder valve by turning it a quarter of a turn so that the brake fluid runs into the receptacle; this will remove the tension of the brake lever causing it to touch the handlebar grip. Then, close the valve, pump and squeeze the lever, and open the valve.
- Repeat above procedures until the fluid flowing into the receptacle no longer contains air bubbles.

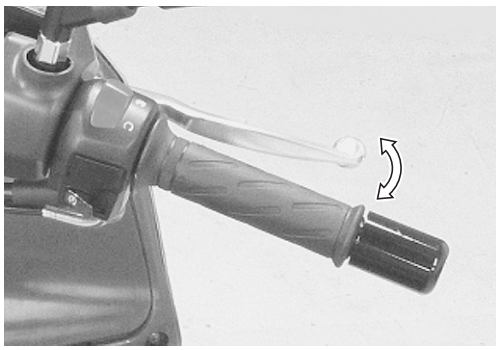

NOTE:
Replenish the brake fluid in the reservoir as necessary while bleeding the brake system. Make sure that there is always some fluid visible in the reservoir.

- Close the bleeder valve, and disconnect the clear hose.

Air bleeder valve: 6 N·m (0.6 kgf-m)

- Fill the reservoir with brake fluid to the “UPPER” line.

AIR BLEEDING FOR THE COMBINATION BRAKE

- Bleed the air from the rear caliper first and then front caliper.
- The combination brake system air bleeding is the same manner as that of the front one.

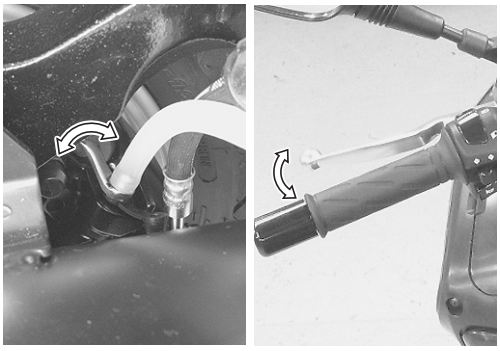

TIRE

Inspect every 4 000 km (2 500 miles, 20 months) thereafter.

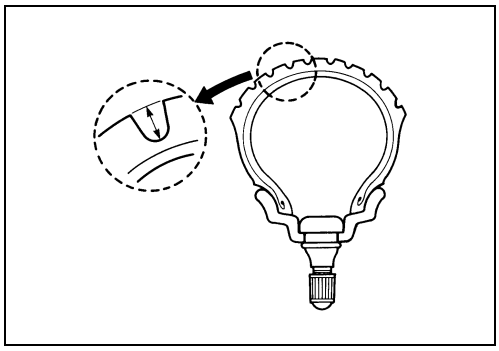

TIRE TREAD CONDITION

Operating the motorcycle with excessively worn tires will decrease riding stability and consequently invite a dangerous situation. It is highly recommended to replace a tire when the remaining depth of tire tread reaches the following specification.

TOOL 09900-20805: Tire depth gauge

DATA Tire tread depth
Service Limit (FRONT): 1.6 mm
(REAR) : 2.0 mm

TIRE PRESSURE

If the tire pressure is too high or too low, steering will be adversely affected and tire wear increased. Therefore, maintain the correct tire pressure for good roadability or shorter tire life will result. Cold inflation tire pressure is as follows.

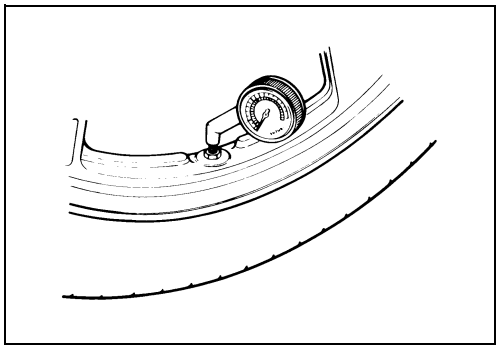

COLD INFLATION TIRE PRESSURE	SOLD RIDING		DUAL RIDING	
	kPa	kgf/cm²	kPa	kgf/cm²
FRONT	200	2.00	200	2.00
REAR	225	2.25	280	2.80

CAUTION

The standard tire fitted on this motorcycle is 110/90-13M/C 56P for front and 130/70-12 62P for rear. The use of tires other than those specified may cause instability. It is highly recommended to use a SUZUKI Genuine Tire.

DATA TIRE TYPE
MICHELIN Pilot Sport SC

STEERING

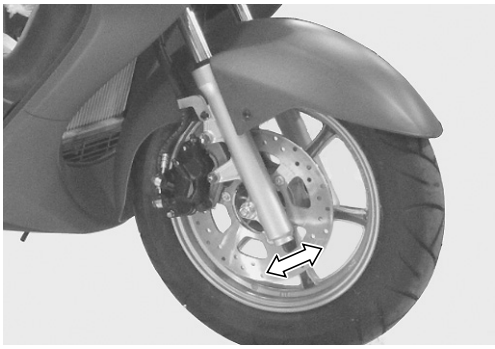

Inspect initially at 1 000 km (600 miles, 3 months) and every 8 000 km (5 000 miles, 40 months) thereafter.

Steering should be adjusted properly for smooth turning of handlebars and safe running. Overtight steering prevents smooth turning of the handlebars and too loose steering will cause poor stability. Check that there is no play in the steering stem while grasping the lower fork tubes by supporting the motorcycle so that the front wheel is off the ground, with the wheel straight ahead, and pull forward. If play is found, perform steering bearing adjustment as described in page 8-32 of this manual.

FRONT FORK

Inspect every 8 000 km (5 000 miles, 40 months) thereafter.

Inspect the front forks for oil leakage, scoring or scratches on the outer surface of the inner tubes. Replace any defective parts, if necessary. (☞8-23)

REAR SUSPENSION

Inspect every 8 000 km (5 000 miles, 40 months) thereafter.

Inspect the rear shock absorbers for oil leakage and mounting rubbers including engine mounting for wear and damage. Replace any defective parts, if necessary.

CHASSIS BOLT AND NUT

Tighten initially at 1 000 km (600 miles, 3 months) and every 4 000 km (2 500 miles, 20 months) thereafter.

Check that all chassis bolts and nuts are tightened to their specified torque. (Refer to pages 2-20 and 21 for the locations of the following nuts and bolts on the motorcycle.)

Item		N·m	kgf-m
① Front axle nut		44	4.4
② Steering stem lock nut		30	3.0
③ Handlebar set bolt		23	2.3
④ Handlebar clamp nut		50	5.0
⑤ Front fork clamp bolt		23	2.3
⑥ Brake master cylinder bolt (Front and Rear)	Upper	12	1.2
	Lower	10	1.0
⑦ Brake hose union bolt		23	2.3
⑧ Brake caliper mounting bolt (Front and Rear)		26	2.6
⑨ Brake caliper air bleeder valve (Front and Rear)		6	0.6
⑩ Brake disc bolt (Front and Rear)		23	2.3
⑪ Rear axle nut		120	12.0
⑫ Rear shock absorber bolt (Upper and Lower)		29	2.9
⑬ Crankcase bracket mounting bolt/nut		100	10.0
⑭ Engine mounting bolt/nut		85	8.5

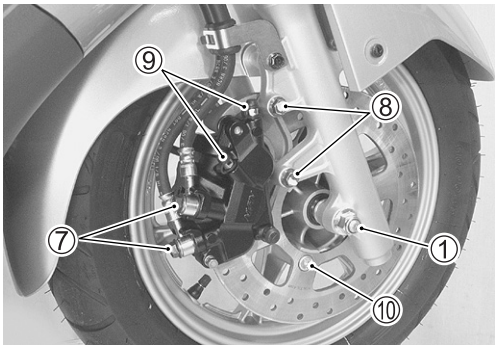

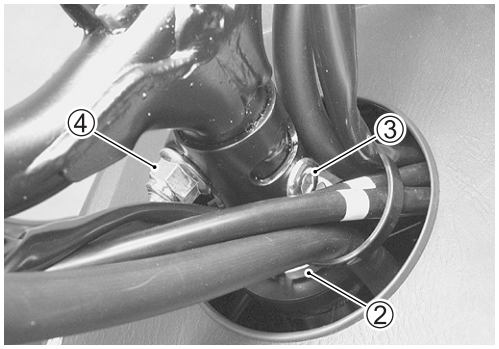

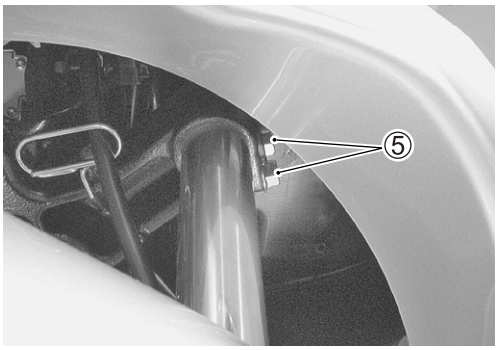

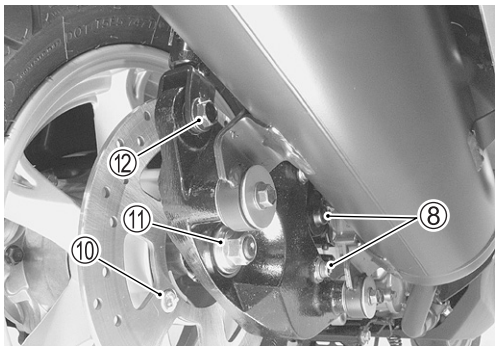

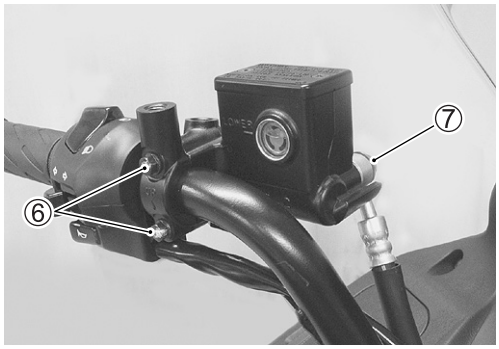
⑦
⑥

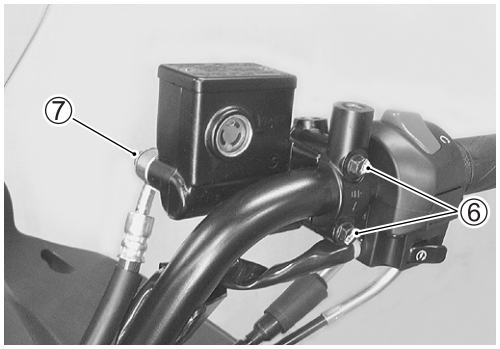
⑦
⑥

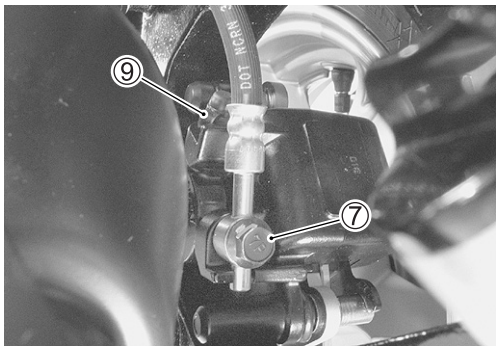
⑨
⑦


⑫

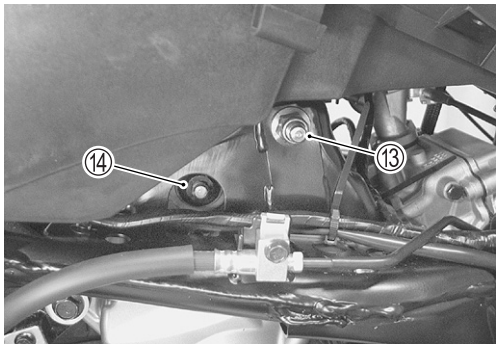
⑭
⑬

COMPRESSION PRESSURE CHECK

The compression of a cylinder is a good indicator of its internal condition.

The decision to overhaul the cylinder is often based on the results of a compression test. Periodic maintenance records kept at your dealership should include compression readings for each maintenance service.

COMPRESSION PRESSURE SPECIFICATION

Standard	Limit
1 650 kPa (16.5 kgf/cm^2)	1 500 kPa (15.0 kgf/cm^2)

Low compression pressure can indicate any of the following conditions:

* Excessively worn cylinder wall
* Worn-down piston or piston rings
* Piston rings stuck in grooves
* Poor seating of valves
* Ruptured or otherwise defective cylinder head gasket

COMPRESSION TEST PROCEDURE

NOTE:

* *Before testing the engine for compression pressure, make sure that the cylinder head bolts are tightened to the specified torque values and valves are properly adjusted.*
* *Have the engine warmed up by idling before testing.*
* *Be sure that the battery used is in fully-charged condition.*

Remove the parts concerned and test the compression pressure in the following manner.

- Support the motorcycle with the center stand.
- Remove the front frame cover. (☞8-8)
- Remove the spark plug. (☞2-7)
- Install the compression gauge to the plug hole. Make sure that the connection is tight.

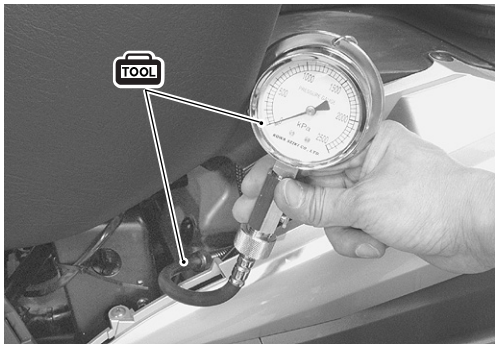

TOOL **09915-63311: Adaptor**
09915-64512: Compression gauge

- Keep the throttle grip in the fully opened position.
- Press the starter button and crank the engine for a few seconds. Record the maximum gauge reading as the cylinder compression.

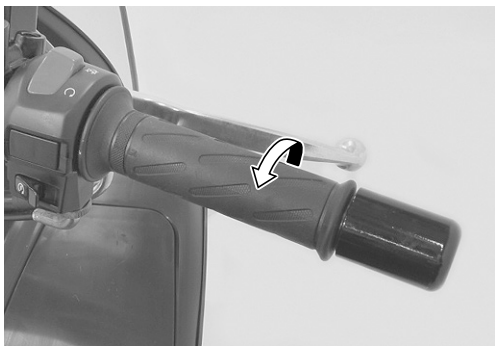

OIL PRESSURE CHECK

Check the oil pressure periodically. This will give a good indication of the condition of the moving parts.

OIL PRESSURE SPECIFICATION

Above 170 kPa (1.7 kgf/cm²) **Below 230 kPa (2.3 kgf/cm²)**	**at 3 000 r/min., Oil temp. at 60 °C**

If the oil pressure is lower or higher than the specification, the following causes may be considered.

LOW OIL PRESSURE

* Clogged oil filter
* Oil leakage from the oil passage
* Damaged O-ring
* Defective oil pump
* Combination of above items

HIGH OIL PRESSURE

* Engine oil viscosity is too high
* Clogged oil passage
* Combination of the above items

OIL PRESSURE TEST PROCEDURE

Check the oil pressure in the following manner.

- Support the motorcycle with the center stand.
- Remove the main gallery plug ①.
- Install the oil pressure gauge.

TOOL 09915-70610: Adaptor
09915-74511: Oil pressure gauge

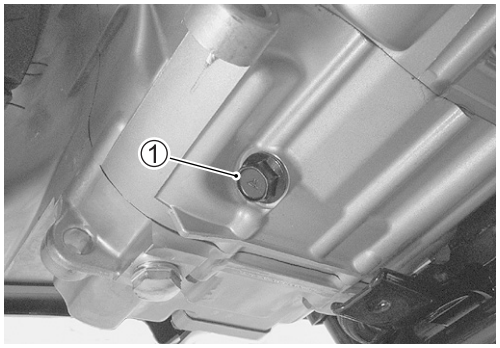

- Remove the front frame cover. (☞8-8)
- Connect the multi-circuit tester to the high-tension cord.

TOOL 09900-25008: Multi-circuit tester set

- Warm up the engine as follows:
  Summer 10 min. at 2 000 r/min.
  Winter 20 min. at 2 000 r/min.

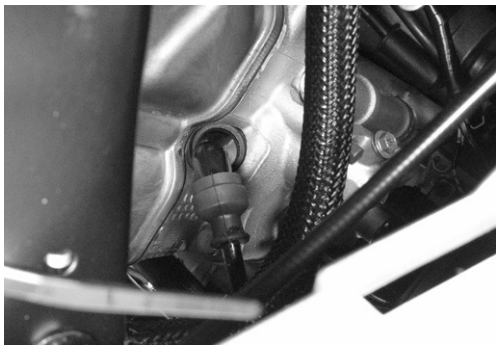

- After warming up, increase the engine speed to 3 000 r/min. (with the tachometer), and read the oil pressure gauge.

Oil gallery plug: 21 N·m (2.1 kgf-m)

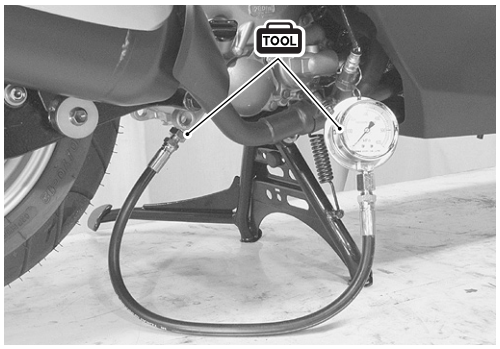

AUTOMATIC CLUTCH INSPECTION

This motorcycle is equipped with an automatic clutch and variable ratio belt drive transmission. The engagement of the clutch is governed by engine RPMs and centrifugal mechanism located in the clutch.

To insure proper performance and longer lifetime of the clutch assembly it is essential that the clutch engages smoothly and gradually. The following inspections must be performed:

INITIAL ENGAGEMENT INSPECTION

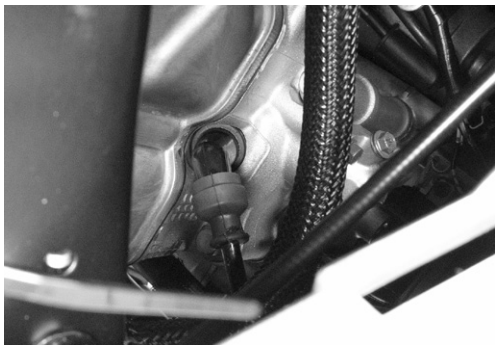

- Warm up the engine to normal operating temperature.
- Remove the front frame cover. (☞8-8)
- Connect the multi-circuit tester to the high-tension cord.
- Seated on the motorcycle with the motorcycle on level ground, increase the engine RPM slowly and note the RPM at which the motorcycle begins to move forward.

TOOL 09900-25008: Multi-circuit tester set

DATA Clutch engagement r/min: 3 800 ± 300 r/min

CLUTCH "LOCK-UP" INSPECTION

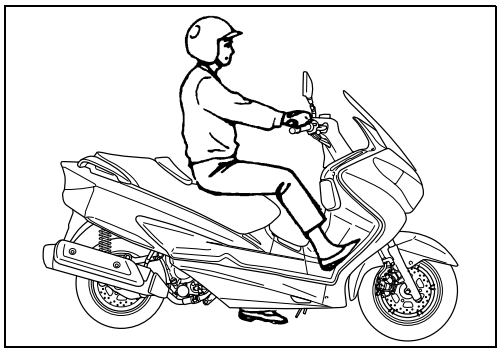

Perform this inspection to determine if the clutch is engaging fully and not slipping.

- Apply the front and rear brakes as firm as possible.
- Briefly open the throttle fully and note the maximum engine RPMs sustained during the test cycle.

CAUTION

Do not apply full power for more than 3 seconds or damage to the clutch or engine may occur.

DATA Clutch lock-up r/min: 6 000 ± 500 r/min

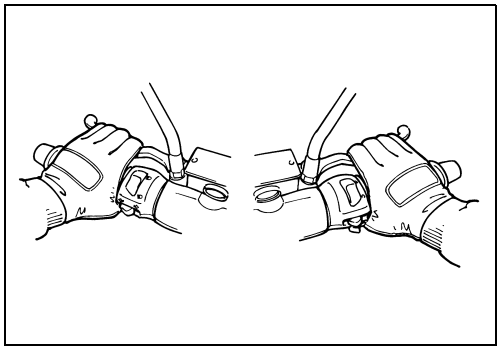

SDS CHECK

Using SDS, sample the data at the time of new and periodic vehicle inspections.

After saving the sampled data in the computer, file them by model and by user.
The periodically filed data help improve the accuracy of troubleshooting since they can indicate the condition of vehicle functions that has changed with time.
For example, when a vehicle is brought in for service but the troubleshooting of a failure is not easy, comparing the current data value to the past filed data value at time of normal condition can allow the specific engine failure to be determined.
Also, in the case of a customer vehicle which is not periodically brought in for service with no past data value having been saved, if the data value of a good vehicle condition have been already saved as a master (STD), comparison between the same models helps facilitate the troubleshooting.

- Remove the front cover. (☞8-8)
- Set up the SDS tools. (☞4-25)

TOOL 09904-41010: SDS set tool
99565-01010-009: CD-ROM Ver. 9

NOTE:
** Before taking the sample of data, check and clear the Past DTC. (☞4-26)*
** A number of different data under a fixed condition as shown below should be saved or filed as sample.*

SAMPLE:
Data sampled from cold starting through warm-up

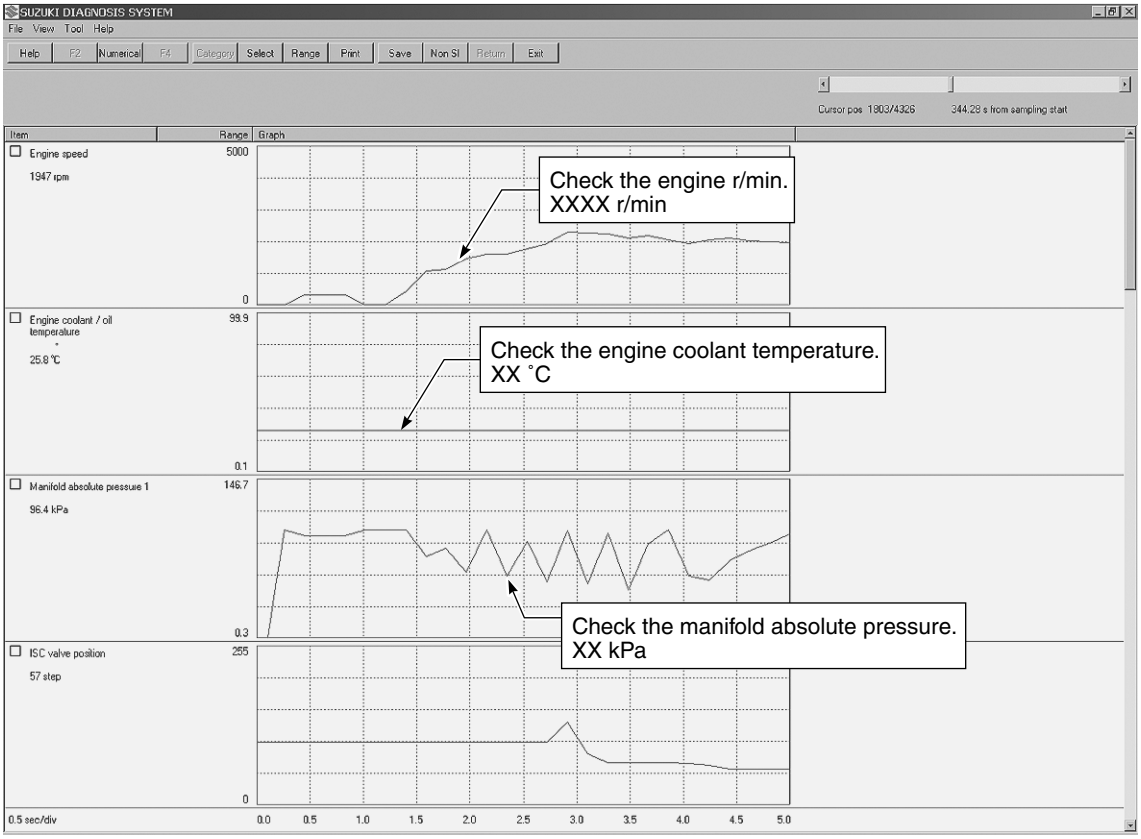

Data at 3 000 r/min under no load

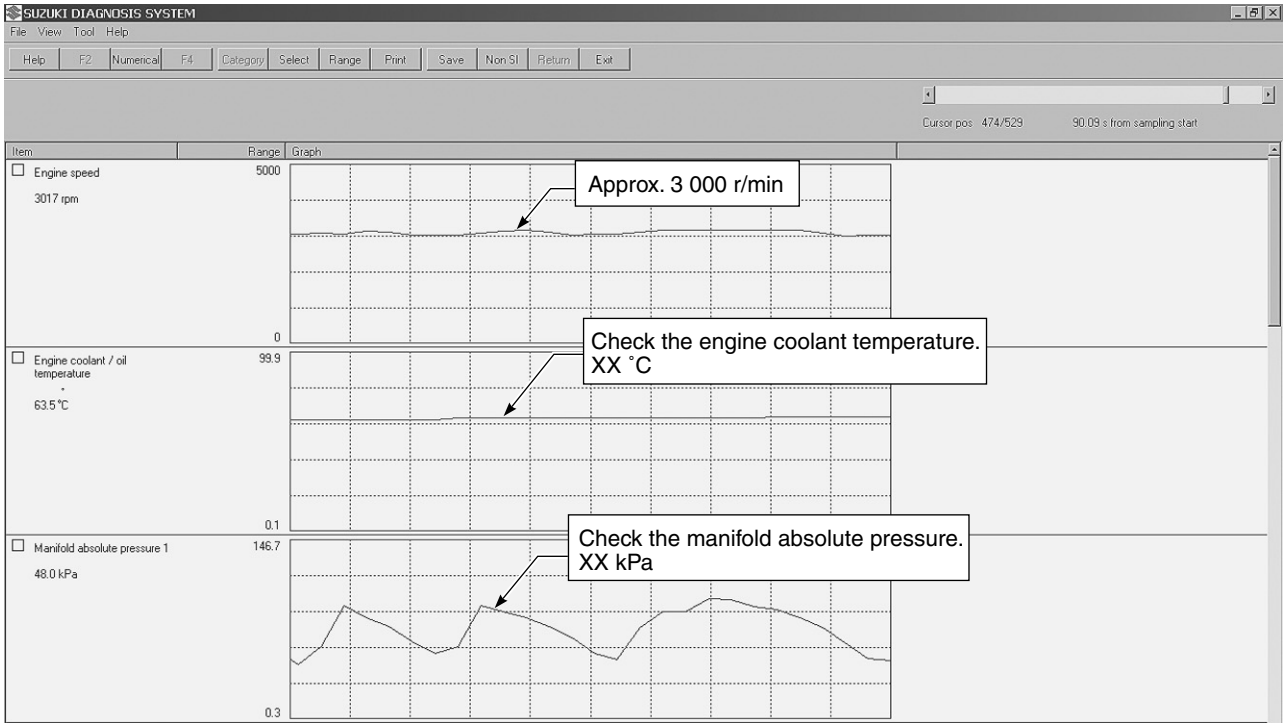

Data at the time of racing

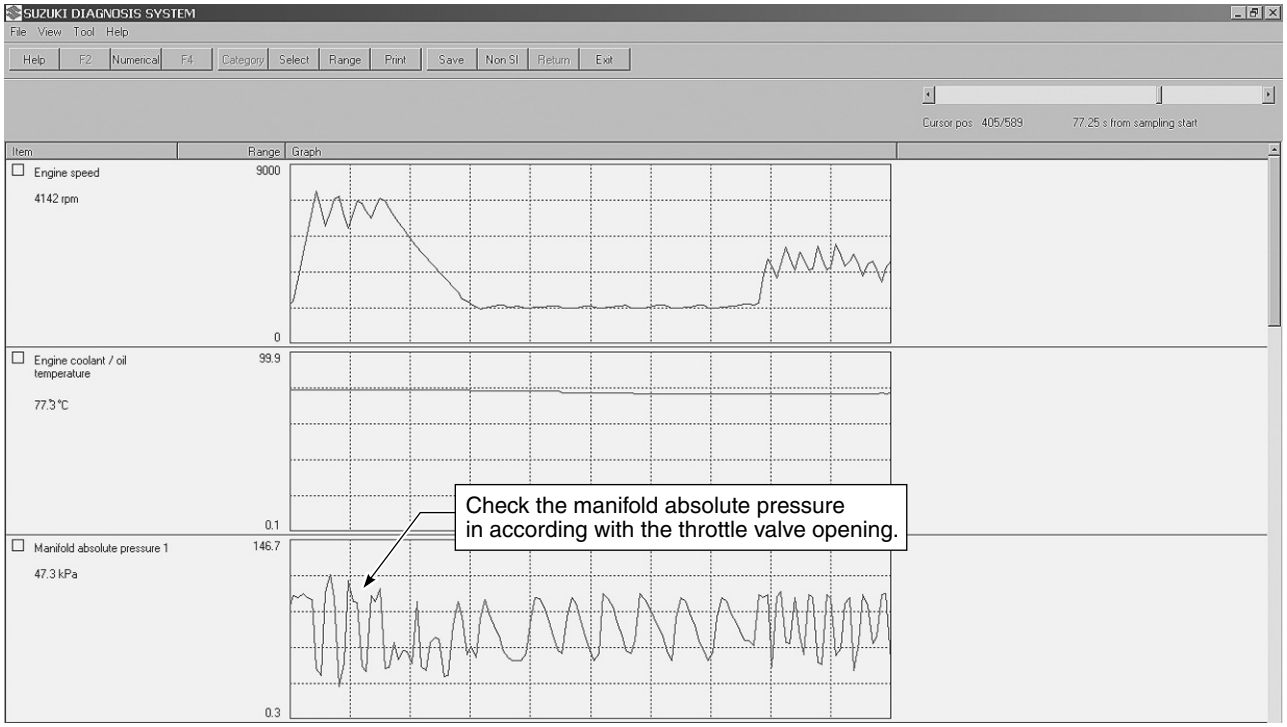

Data of intake negative pressure during idling (100 °C)

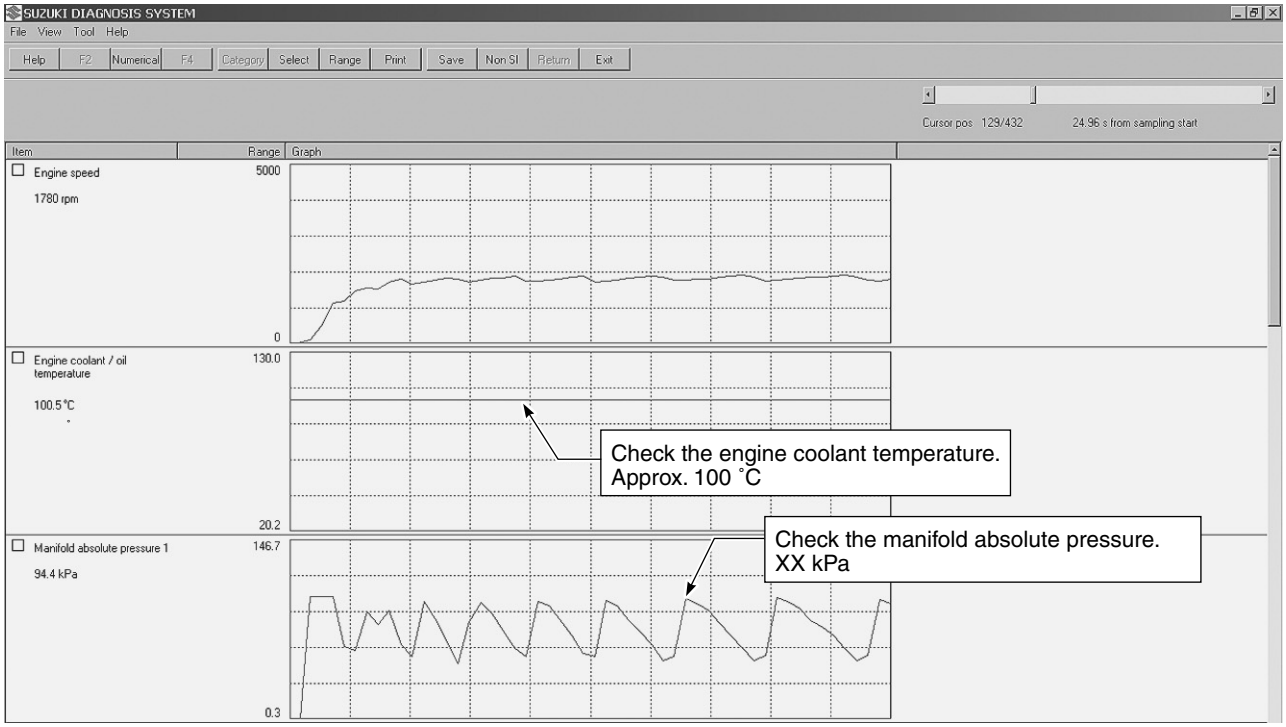

Data of manifold absolute pressure operation at the time of starting

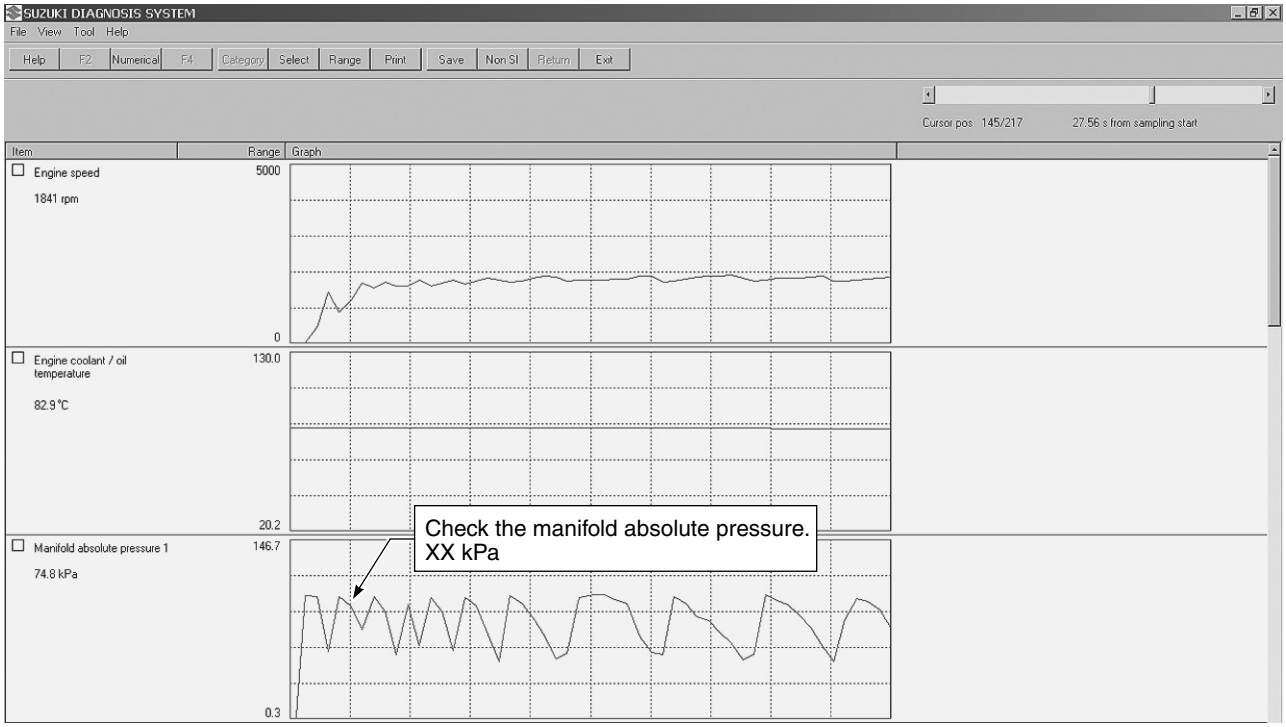

Example of trouble

Three data; value 1 (current data 1), value 2 (past data 2) and value 3 (past data 3); can be made in comparison by showing them in the graph. Read the change of value by comparing the current data to the past data that have been saved under the same condition, then you may determine how changes have occurred with the pass of time and identify what problem is currently occurring.

With DTC not output, if the value of engine coolant temperature is found to be higher than the data saved previously, the possible cause may probably lie in a sensor circuit opened or ground circuit opened or influence of internal resistance value changes, etc.

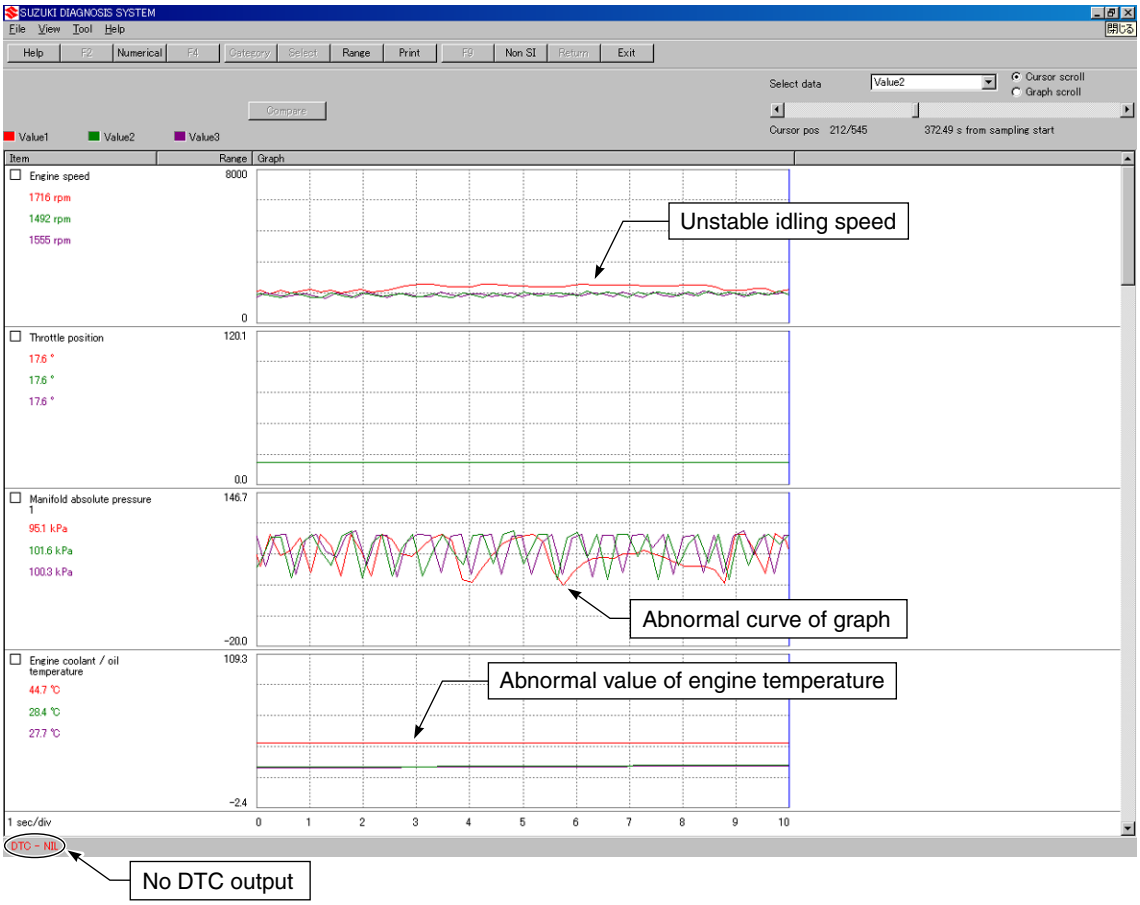

ENGINE

CONTENTS

ENGINE COMPONENTS REMOVABLE WITH THE ENGINE IN PLACE

The parts listed below can be removed and reinstalled without removing the engine from the frame. Refer to page listed in each section for removal and reinstallation instructions.

ENGINE CENTER

ITEM	REMOVAL	INSPECTION	INSTALLATION
Starter motor	☞9-14	☞9-16	☞9-18
Air cleaner	☞2-4	☞2-5	☞2-4
Throttle body	☞5-10	☞5-12	☞5-13
Cylinder head cover	☞2-6	—	☞3-71
Cylinder head	☞3-12	☞3-22	☞3-67
Cam chain guide	☞3-13	☞3-30	☞3-67
Cam chain tensioner	☞3-21	☞3-30	☞3-30
Cam chain tension adjuster	☞3-11	☞3-30	☞3-70
Spark plug	☞2-7	☞2-7	☞2-8
Camshaft	☞3-11	☞3-28	☞3-68
Camshaft sprocket	☞3-11	—	☞3-69
Valve	☞3-21	☞3-22	☞3-27
Cylinder	☞3-13	☞3-31	☞3-67
Piston	☞3-13	☞3-31	☞3-66

ENGINE LEFT SIDE

ITEM	REMOVAL	INSPECTION	INSTALLATION
Fixed drive face	☞3-17	☞3-36	☞3-61
Cooling fan filter	☞2-5	—	☞2-5
Movable drive face	☞3-17	☞3-36	☞3-61
Clutch housing	☞3-17	☞3-40	☞3-61
Clutch shoe/ movable driven face assembly	☞3-17	☞3-40	☞3-60
Drive V-belt	☞3-17	☞3-41	☞3-60
Oil sump filter	☞3-18	☞3-35	☞3-58
Final gear box cover	☞3-17	—	☞3-59
Rear axle shaft	☞3-16	☞3-50	☞3-58
Idle shaft	☞3-18	☞3-50	☞3-59
Driveshaft	☞3-18	☞3-50	☞3-58

ENGINE RIGHT SIDE

ITEM	REMOVAL	INSPECTION	INSTALLATION
Muffler	☞6-2	—	☞6-3
Generator cover	☞3-14	—	☞3-64
Starter idle gear	☞3-15	—	☞3-64
Water pump	☞7-13	☞7-15	☞7-17
Oil filter	☞2-9	—	☞2-9

ENGINE REMOVAL AND REMOUNTING

REMOVAL

- Remove the trunk box. (☞8-11)
- Remove the rear lower leg shield. (☞8-8)
- Drain engine oil. (☞2-9)
- Drain engine coolant. (☞2-12)
- Drain final gear box oil. (☞2-10)

- Disconnect the battery ⊖ lead wire.

- Disconnect the crankcase breather hose ①.
- Remove the air cleaner box and air cleaner box outlet tube ②.

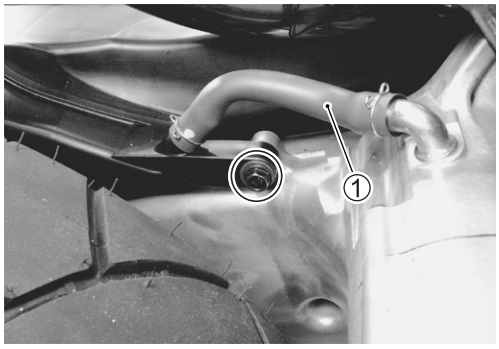

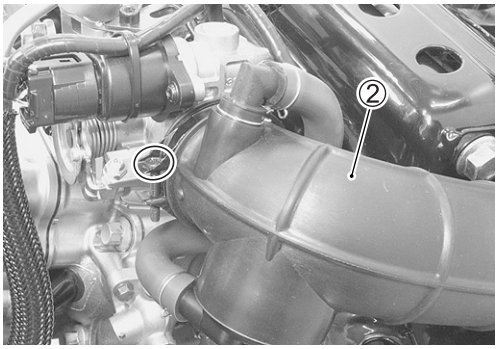

- Disconnect the engine ground wire ③ and starter motor lead wire ④.

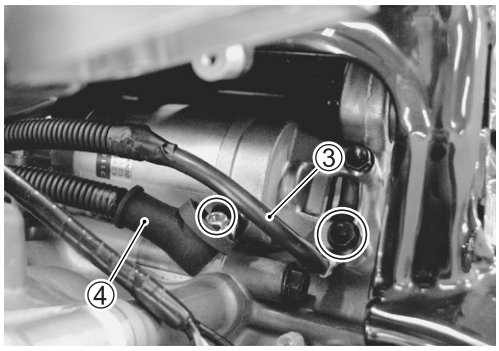

- Disconnect the radiator inlet hose ⑤.
- Disconnect the engine coolant temperature meter lead wire ⑥, ignition coil lead wires ⑦ and ECT sensor coupler ⑧.

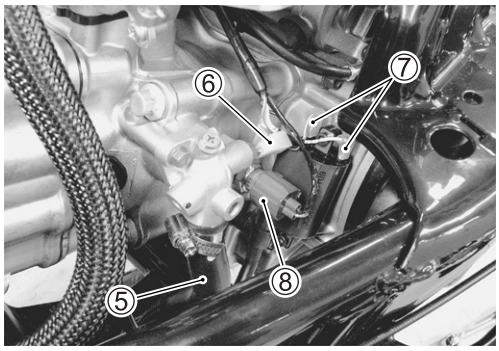

- Disconnect the TP sensor coupler ⑨, IAP sensor coupler ⑩, ISC valve coupler ⑪ and injector coupler ⑫.

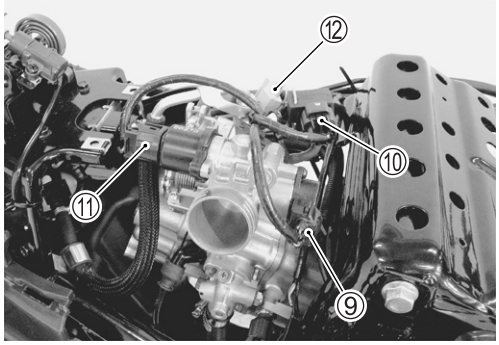

- Disconnect the throttle cables ⑬.

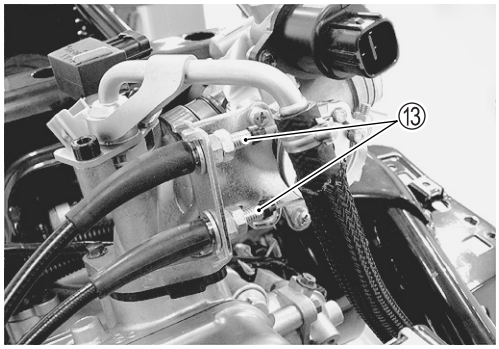

- Disconnect the fuel hose from the fuel pump side. (☞5-6)
- Remove the throttle body assembly ⑭ by removing the twist-off bolts.
- Remove the insulator ⑮.

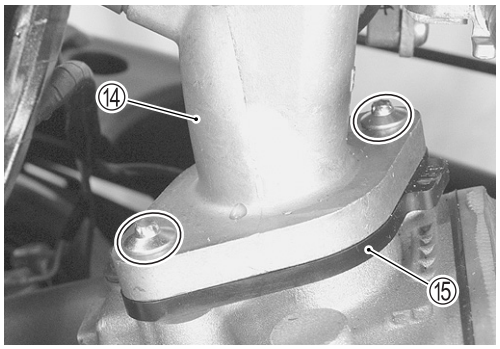

- Disconnect the HO2 sensor coupler ⑯, CKP sensor coupler ⑰ and generator coupler ⑱.

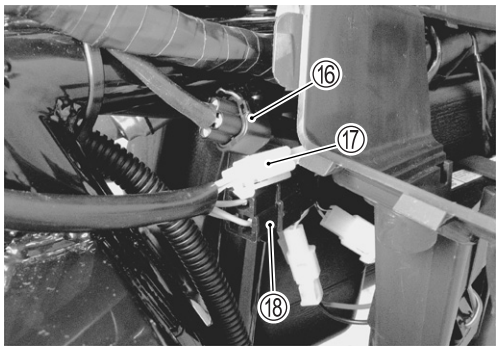

- Loosen the muffler connecting bolt ⑲.
- Remove the muffler.

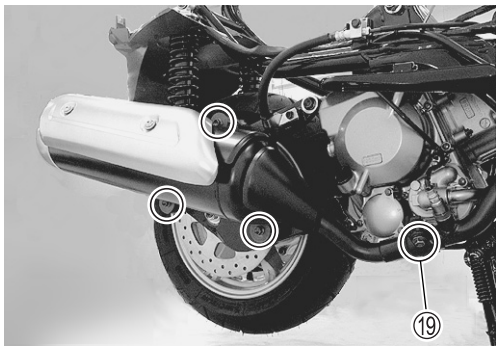

- Remove the exhaust pipe ⑳.
- Disconnect the radiator outlet hose ㉑.

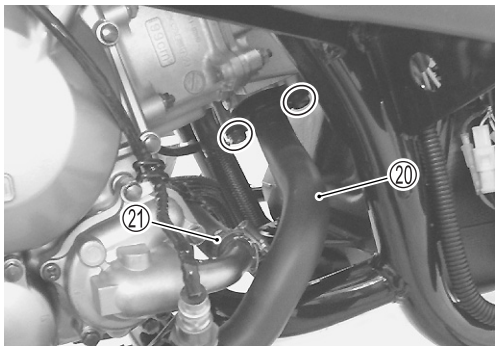

- Remove the exhaust pipe gasket ㉒.

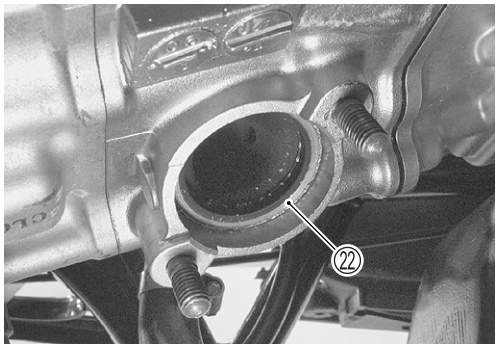

- Remove the rear brake caliper ㉓.
- Remove the rear axle nut ㉔ and collar.
- Remove the rear swingarm ㉕.

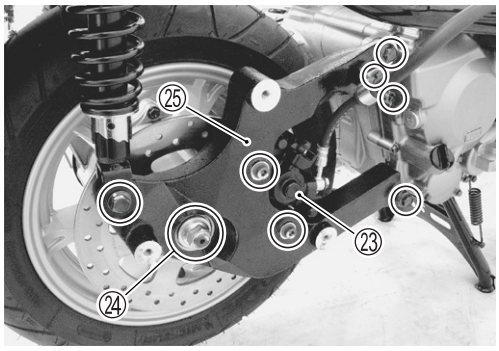

- Remove the spacer ㉖.
- Remove the rear wheel.

- Support the engine using a jack.

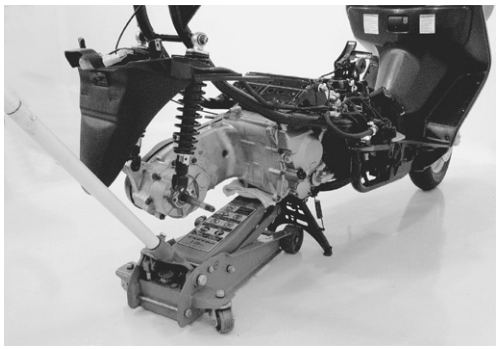

- Remove the rear shock absorber mounting bolt (LH).

- Remove the engine mounting bolt/nut.
- Remove the engine from the frame.

- Remove the crankcase bracket ㉗.

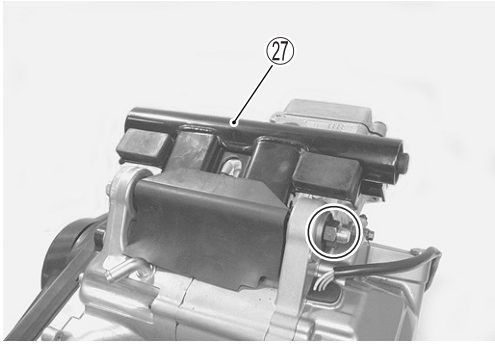

REMOUNTING

Remount the engine in the reverse order of removal. Pay attention to the following points:

- Install the crankcase bracket Ⓐ to the engine, and insert the crankcase bracket bolt Ⓑ from the left side.
- Position the crankcase bracket correctly by inserting a steel plate Ⓒ of 2.5 mm thickness.
- Tighten the crankcase bracket nut Ⓑ to the specified torque.

Crankcase bracket nut Ⓑ: 85 N·m (8.5 kgf-m)

- Support the frame with the center stand.
- Install the engine using a jack.
- Temporarily tighten the rear shock absorber mounting bolt (LH) Ⓓ.
- Insert the engine mounting bolt Ⓔ from the left side.

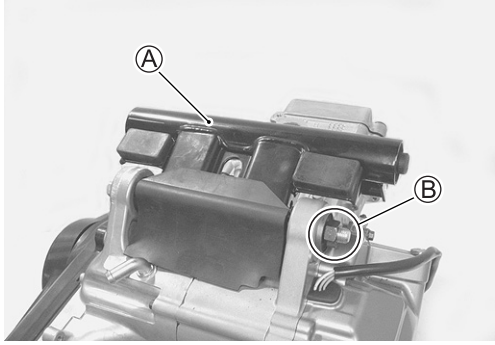

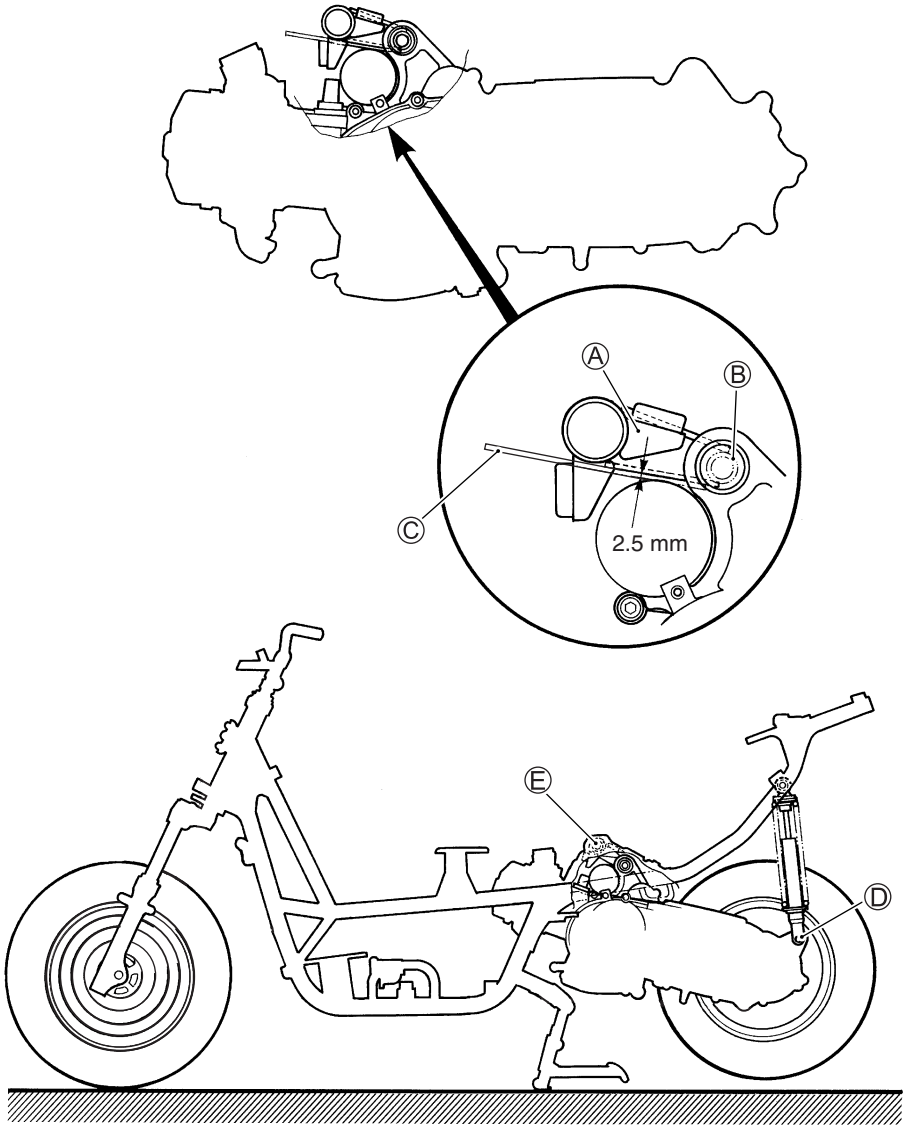

- Tighten the engine mounting nut Ⓔ and rear shock absorber mounting bolt Ⓓ to the specified torque.

Engine mounting nut: 100 N·m (10.0 kgf-m)
Lower rear shock absorber mounting bolt: 29 N·m (2.9 kgf-m)

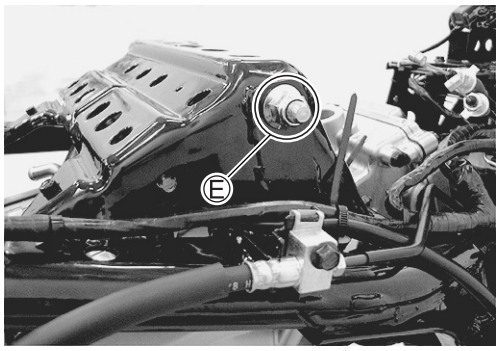

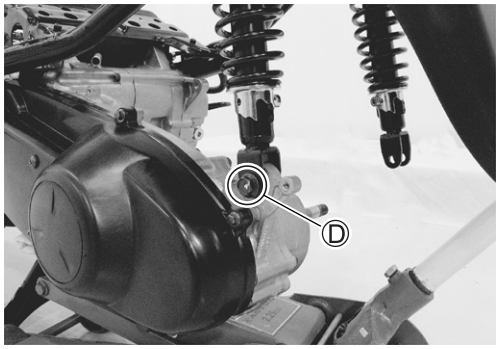

- Install the rear wheel and rear swingarm ①.

Rear axle nut: 120 N·m (12.0 kgf-m)
Rear brake caliper mounting bolt: 26 N·m (2.6 kgf-m)

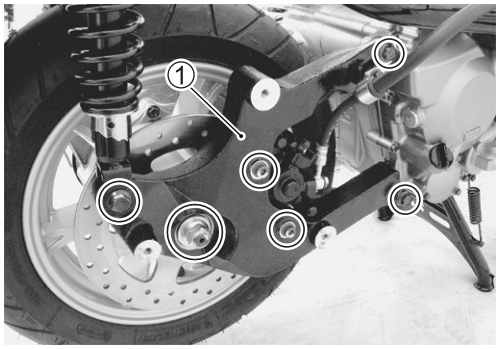

- Install the muffler assembly.

Muffler mounting bolt: 23 N·m (2.3 kgf-m)
Exhaust pipe nut: 23 N·m (2.3 kgf-m)
Muffler connecting bolt: 23 N·m (2.3 kgf-m)

CAUTION

Replace the muffler connector and exhaust pipe gasket with a new one. (☞6-3)

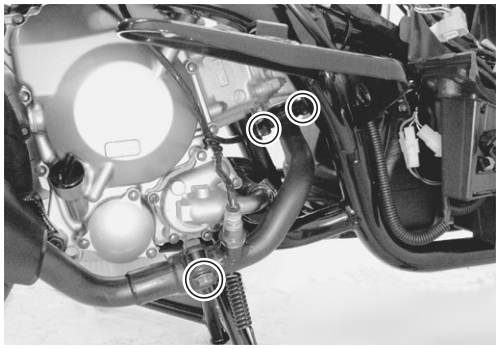

- Install the insulator and throttle body assembly.

TOOL 09930-11910: Torx wrench

NOTE:
** Face the O-ring side of insulator to the engine.*
** Face the tab Ⓕ of insulator to forward.*
** Use new twist-off bolts.*

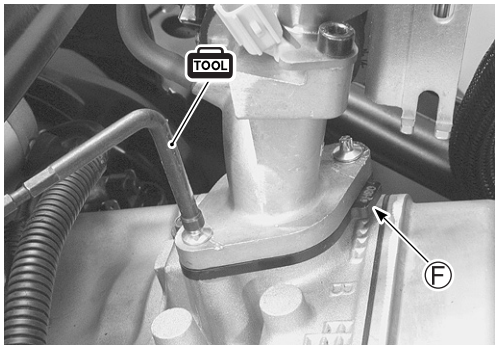

CAUTIONS AFTER REINSTALLATON

- After the engine has been mounted, rout the lead wires, cables and hoses properly. (☞10-15)
- Pour the specified amount of engine oil and final gear box oil. (☞2-9 and -10)
- Pour the specified amount of engine coolant. (☞2-12)
- Perform the following adjustment:
  - * Valve clearance (☞2-6)
  - * Throttle cable (☞2-11)
- Check for leakage of the engine oil and engine coolant.

ENGINE DISASSEMBLY

CAUTION

Identify the position of each removed part. Organize the parts in their respective groups (e.g., intake, exhaust) so that they can be reinstalled in their original positions.

IGNITION COIL AND SPARK PLUG

- Remove the ignition coil ①.
- Remove the spark plug.

TOOL 09930-10121: Spark plug wrench set

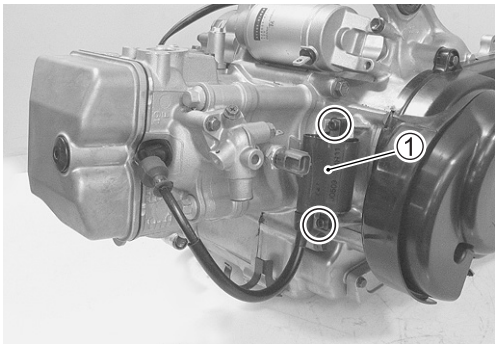

STARTER MOTOR

- Remove the starter motor ①.

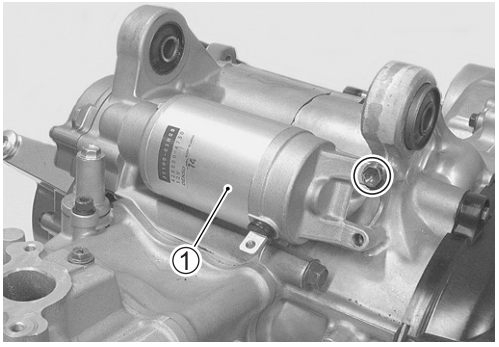

CYLINDER HEAD COVER

- Remove the cylinder head cover ①.

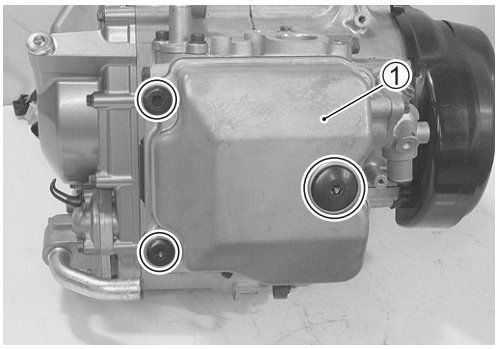

COOLING FAN FILTER

- Remove the cooling fan cover ①.
- Remove the cooling fan filter ②.

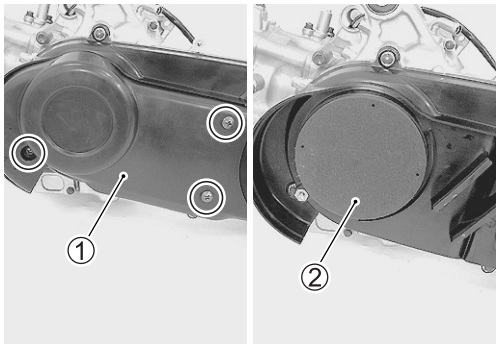

CAMSHAFT

- Remove the generator cover plug ①.
- Bring the piston to TDC on the compression stroke by turning the crankshaft until the line Ⓐ on the generator rotor aligns with the mark Ⓑ on the generator cover.

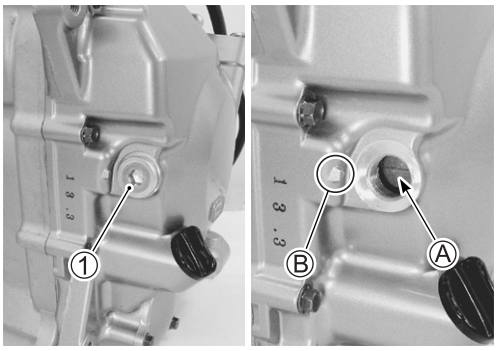

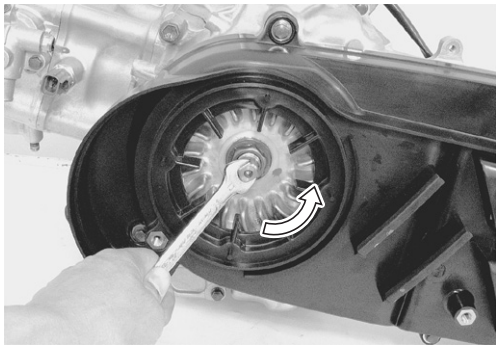

- Remove the spring holder bolt ② and spring.
- Remove the O-ring, cam chain tension adjuster and gasket ③.

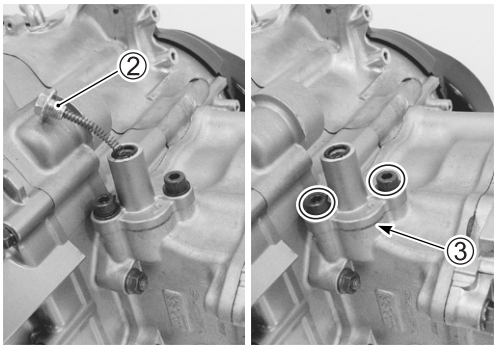

- Remove the camshaft journal holder No.2 ④.
- Remove the dowel pins.

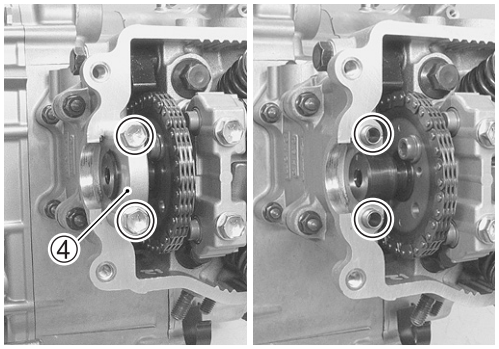

- Remove the camshaft sprocket bolts.

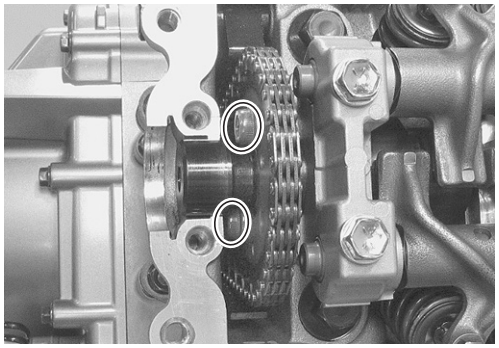

- Slide and drop the camshaft sprocket to the camshaft groove Ⓒ.
- Disengage the cam chain from the camshaft sprocket.
- Remove the camshaft journal holder No.1 ⑤.

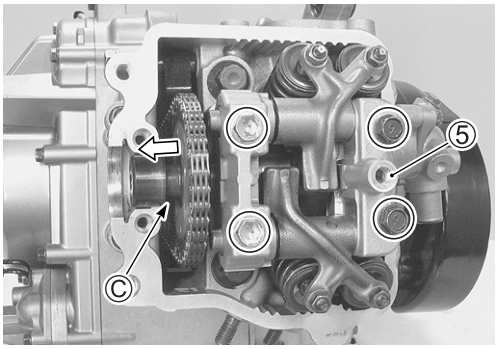

- Remove the camshaft ⑥ and camshaft sprocket.

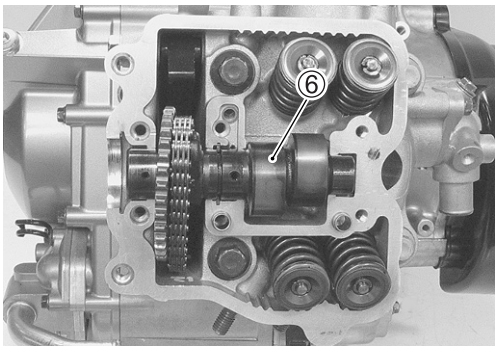

- Remove the dowel pins and C-ring ⑦.

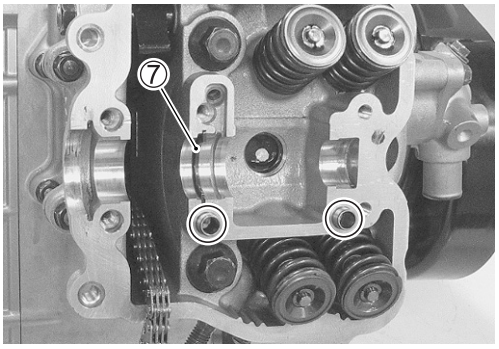

CYLINDER HEAD

- Remove the cylinder head nuts.

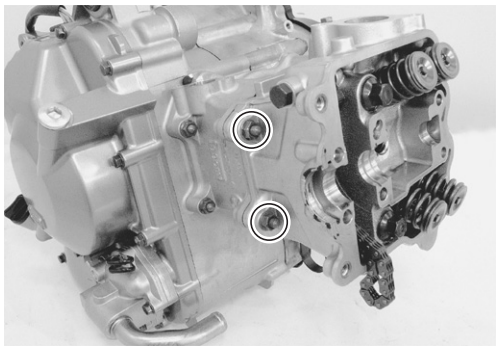

- Remove the cylinder head bolts.

NOTE:
The cylinder head bolts must be loosened diagonally and evenly.

- Remove the cylinder head.

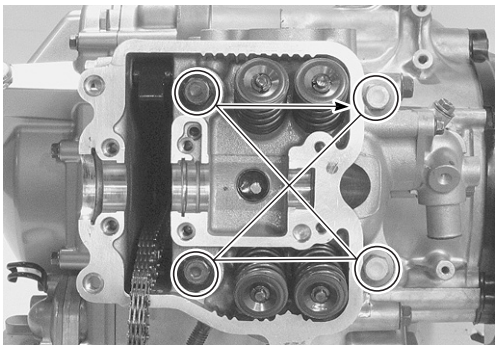

- Remove the cylinder head gasket ① and dowel pins.

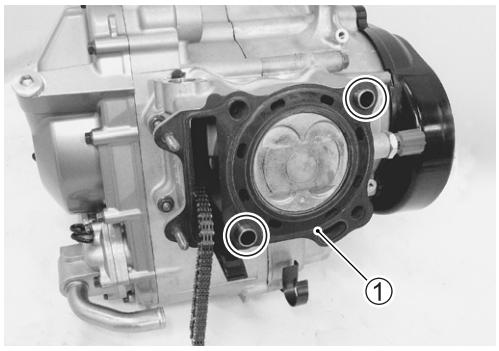

CYLINDER

- Remove the cam chain guide ①.

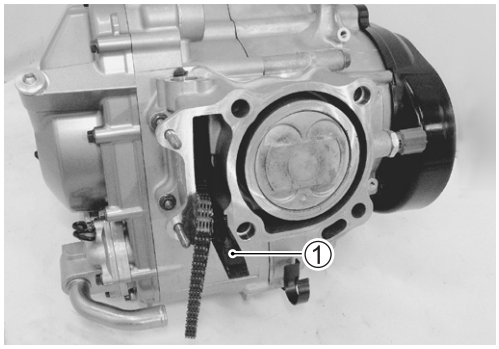

- Remove the cylinder nuts.
- Remove the cylinder.

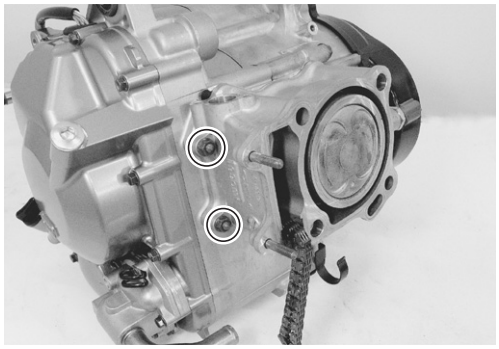

- Remove the cylinder gasket ② and dowel pins.

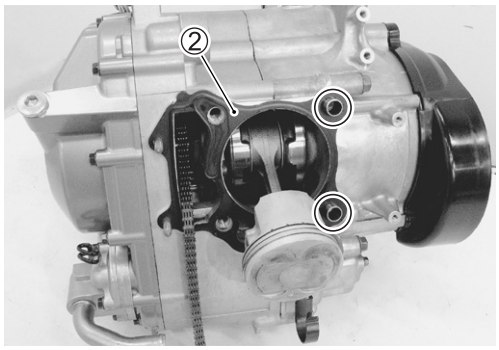

PISTON

- Remove the piston pin circlip ①.
- Remove the piston pin ②.

CAUTION

Take care not to drop the removed circlip into the crankcase.

- Remove the piston ③.

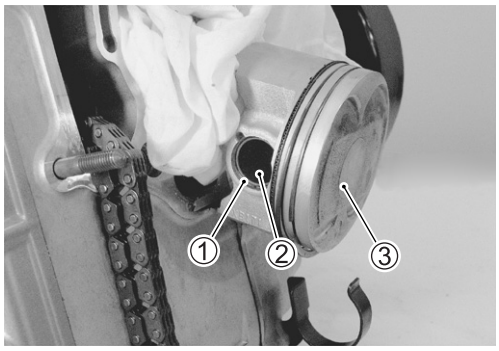

OIL FILTER

- Remove the oil filter cap ①.

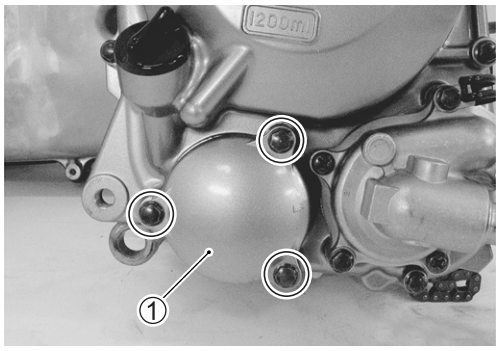

- Remove the oil filter ②.
- Remove the O-ring ③.

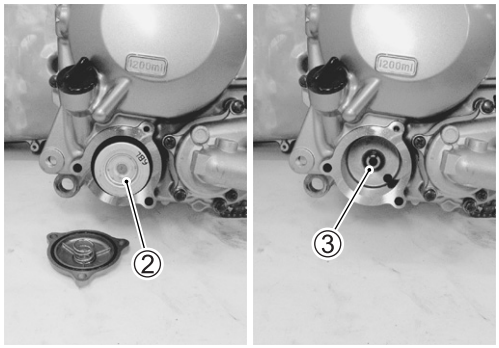

WATER PUMP

- Remove the water pump assembly ①.

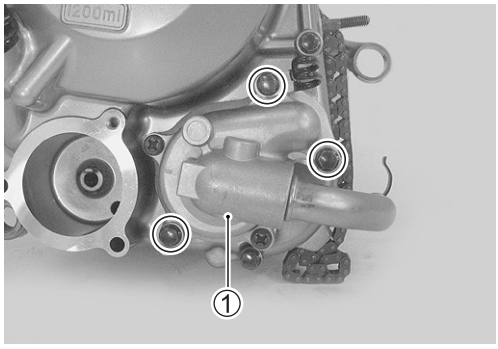

GENERATOR COVER

- Remove the generator cover ①.

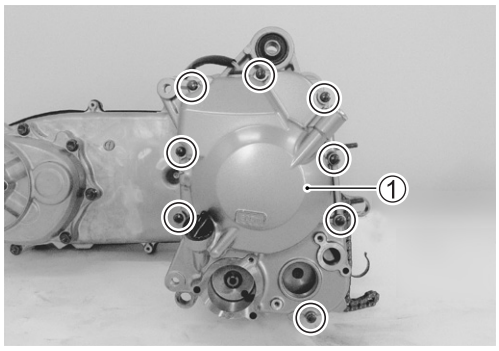

- Remove the gasket ② and dowel pins.

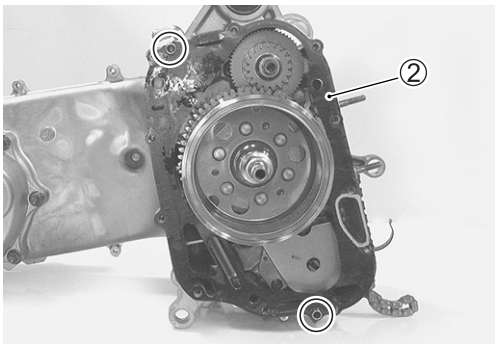

GENERATOR ROTOR AND STARTER DRIVEN GEAR

- Remove the starter idle gear shaft ① and starter idle gear ②.

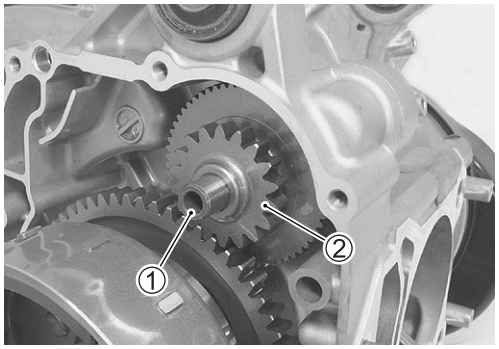

- With the generator rotor held immovable with the special tool, remove the generator rotor nut.

TOOL 09930-44520: Rotor holder

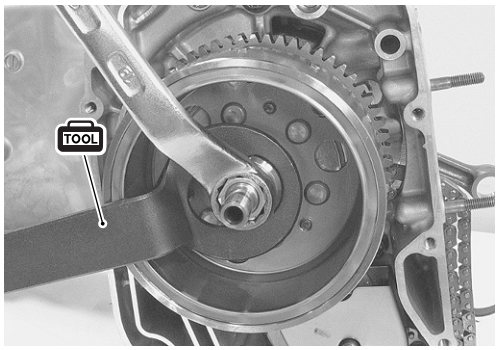

- Remove the generator rotor ③ and starter driven gear ④ using the special tool.

TOOL 09930-34980: Rotor remover

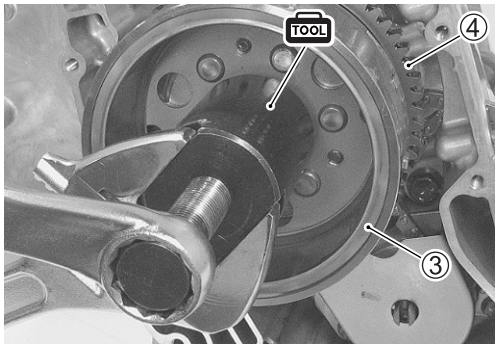

- Remove the key ⑤.

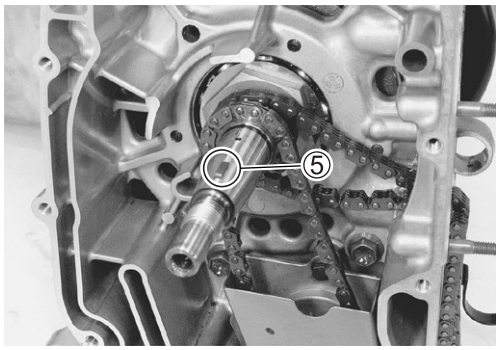

OIL PUMP AND CAM CHAIN

- Remove the oil pump cover ①.

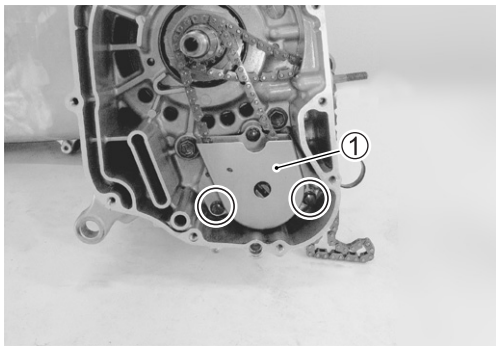

- Remove the oil pump driven sprocket and oil pump ② along with the oil pump drive chain ③.
- Remove the cam chain ④.

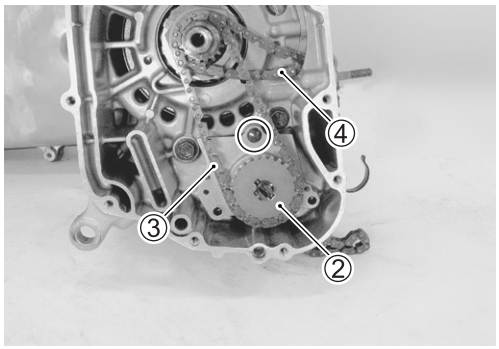

CRANKSHAFT RIGHT BEARING NUT

- Insert a proper steel rod into the crankcase hole Ⓐ and pass it through the crankshaft web holes in order to prevent the crankshaft from turning.

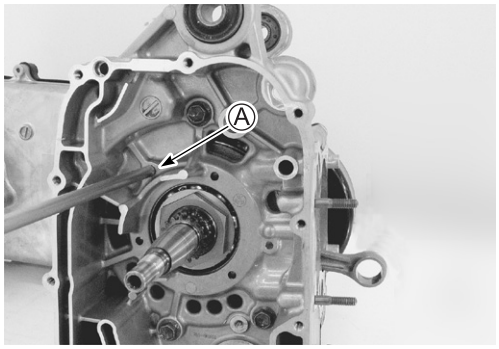

- With the crankshaft held immovable, loosen the crankshaft right bearing nut using the special tool.

TOOL 09922-21410: Long socket (46 mm)

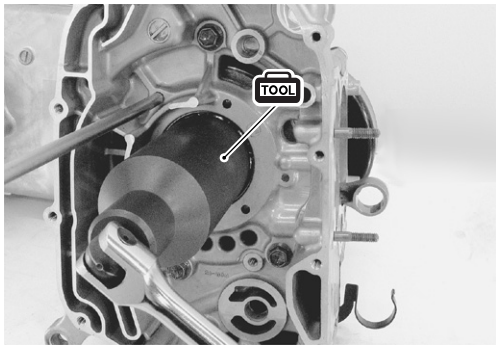

- Remove the shim ①.

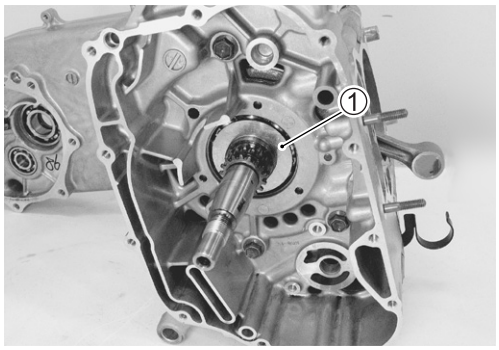

DRIVE TRAIN

- Remove the clutch cover ①.

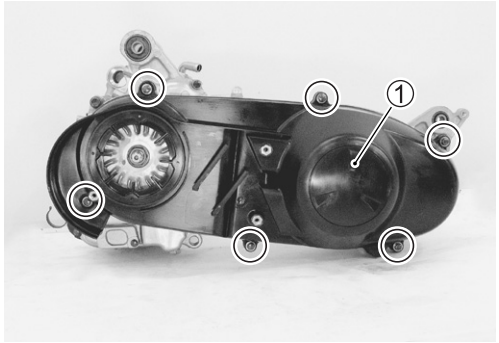

- With the fixed drive face ② held immovable using the special tool, loosen the nut.
- Remove the washer.
- Remove the fixed drive face.

TOOL 09930-40113: Rotor holder

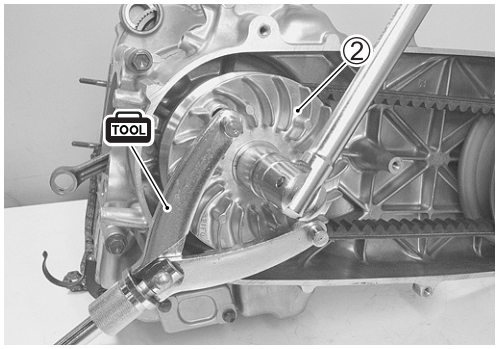

- With the clutch housing ③ held immovable using the special tool, remove the nut.
- Remove the clutch housing.

TOOL 09930-40113: Rotor holder

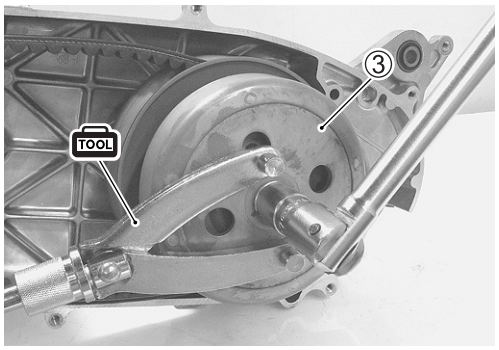

- Remove the drive V-belt ④ along with clutch shoe/movable driven face assembly ⑤.

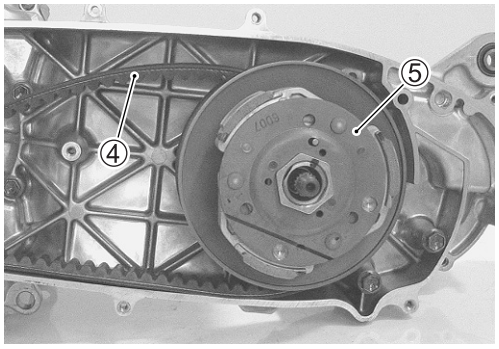

- Remove the movable drive face assembly ⑥ with the spacer ⑦.

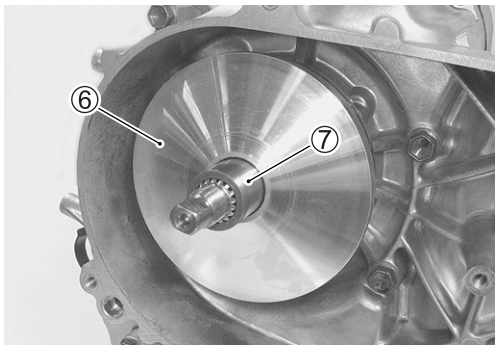

FINAL GEAR

- Remove the final gear cover ①.

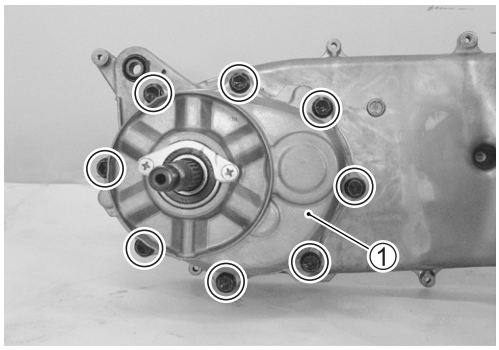

- Remove the dowel pins.
- Remove the idle gear ②.

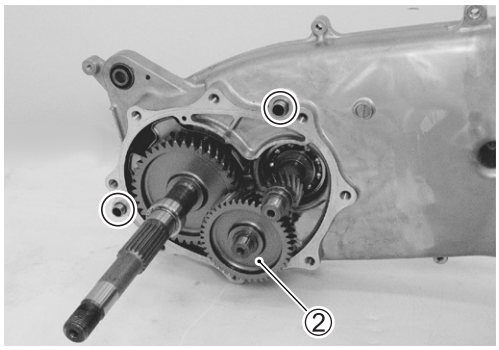

- Remove the shim ③.
- Remove the final driven gear/rear axle shaft ④.

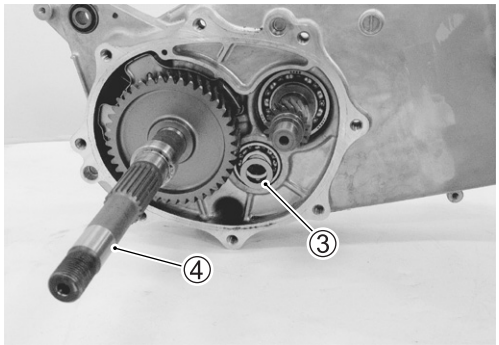

- Remove the driveshaft ⑤ by tapping it with a plastic mallet.

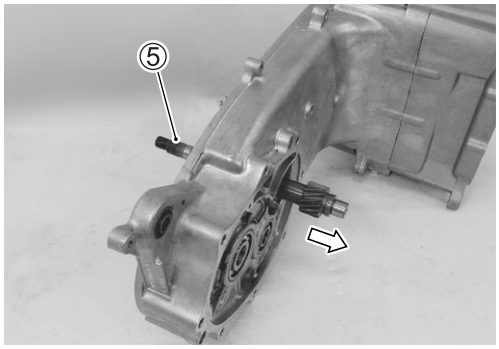

OIL SUMP FILTER

- Remove the oil sump filter cap ①.

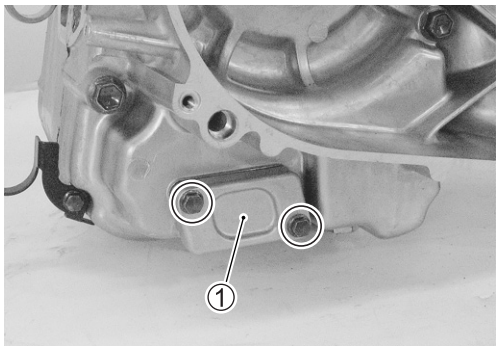

- Remove the gasket ②.
- Pull out the oil sump filter ③.

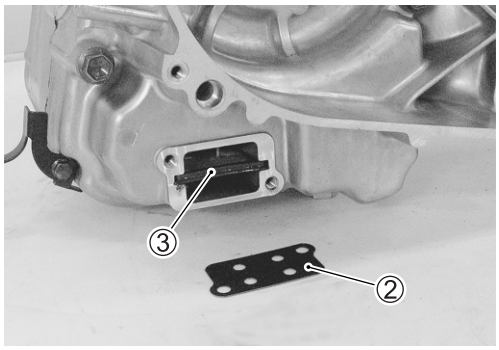

CRANKCASE

- Remove the 6 mm crankcase bolts first, then 8 mm ones evenly and diagonally.

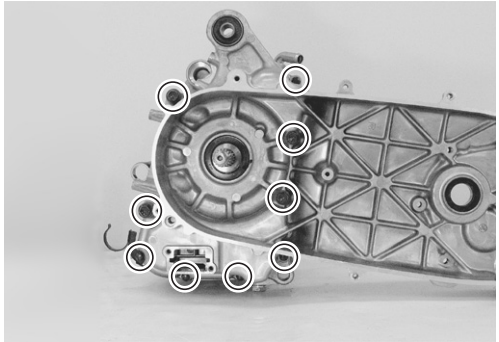

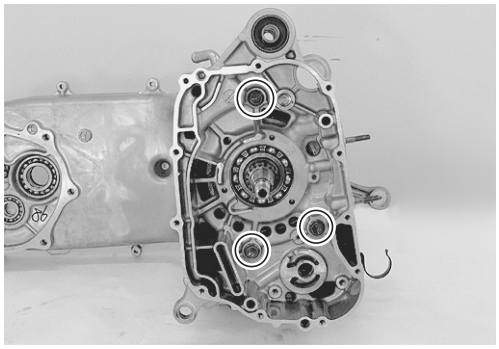

CRANKSHAFT

- Separate the crankcase into left and right halves using the special tool.

TOOL 09920-13120: Crankcase/crankshaft separator

NOTE:

** Set the special tool so that the tool arms are in parallel with the end face of crankcase.*

** The crankshaft should remain in the left crankcase half.*

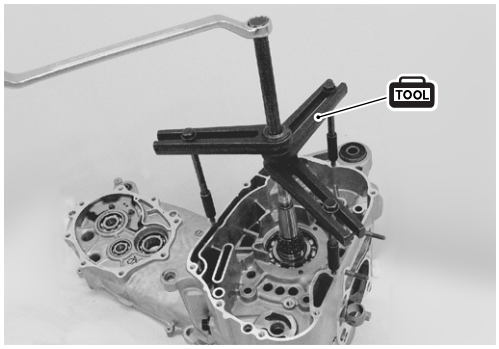

- Remove the dwell pins.

- Remove the crankshaft using the special tool.

TOOL 09920-13120: Crankcase/crankshaft separator

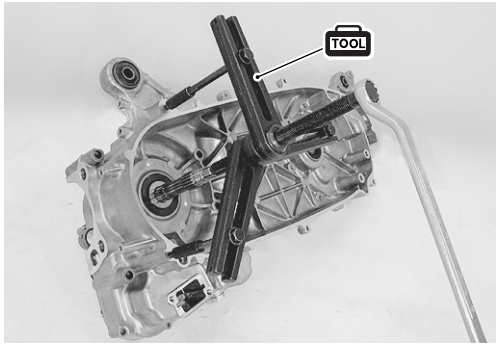

ENGINE COMPONENT INSPECTION AND SERVICE

ROCKER ARM AND SHAFT

DISASSEMBLY

- Pull out the rocker arm shafts ①.
- Remove the intake ② and exhaust ③ valve rocker arms and wave washers ④.

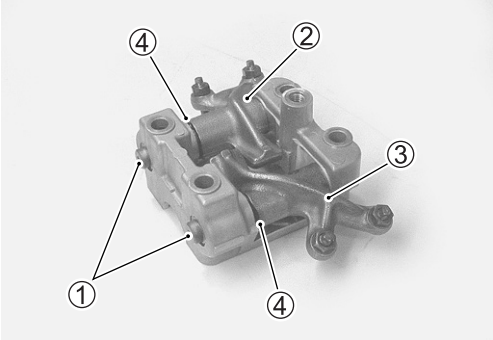

ROCKER ARM SHAFT OUTSIDE DIAMETER INSPECTION

- On the sliding surface, take two measurements, at right angle to each other.
- If the outside diameter measured is less than the standard value, replace the shaft.

DATA Rocker arm shaft O.D. (IN & EX):
Standard: 11.973 – 11.984 mm

TOOL 09900-20205: Micrometer (0 – 25 mm)

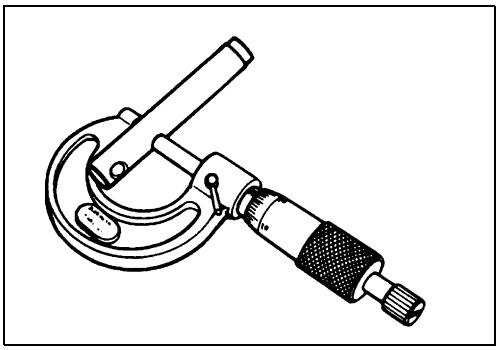

ROCKER ARM SHAFT INSIDE DIAMETER INSPECTION

- Measure the rocker arm inside diameter in two directions at right angle to each other.
- If the inside diameter measured exceeds the standard value, replace the shaft.

DATA Rocker arm shaft I.D. (IN & EX):
Standard: 12.000 – 12.018 mm

TOOL 09900-20605: Dial calipers

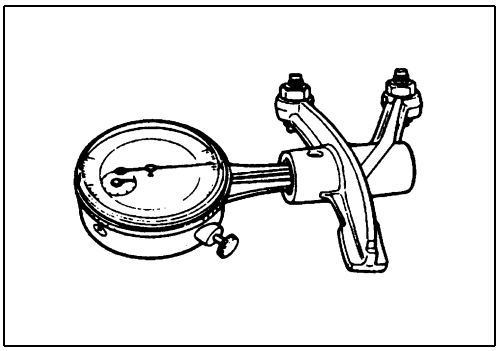

REASSEMBLY

Reassemble the camshaft housing in the reverse order of disassembly. Pay attention to the following points:

- Apply engine oil to the rocker arm shafts sufficiently.

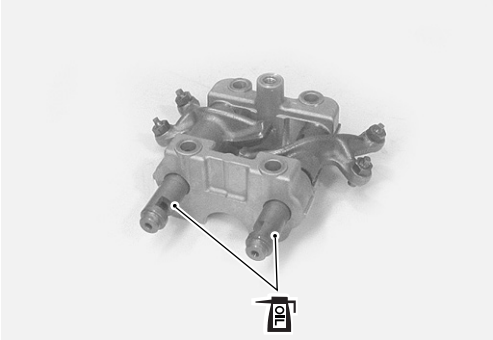

CYLINDER HEAD

DISASSEMBLY

- Remove the cam chain tensioner ①.

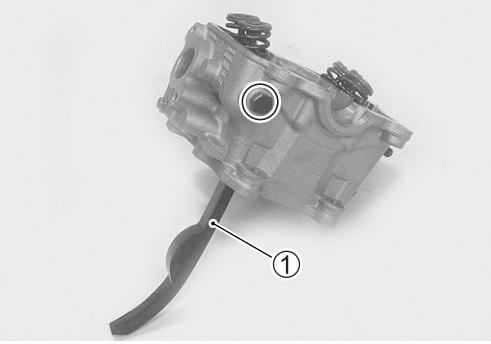

- Remove the thermostat cover ②.

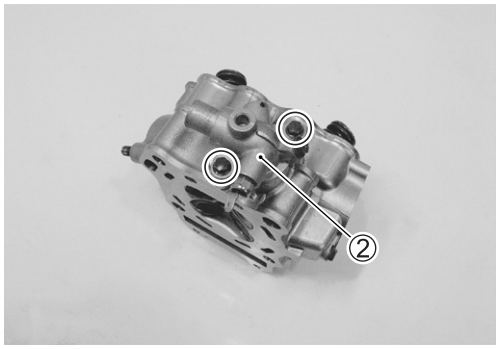

- Remove the thermostat ③.

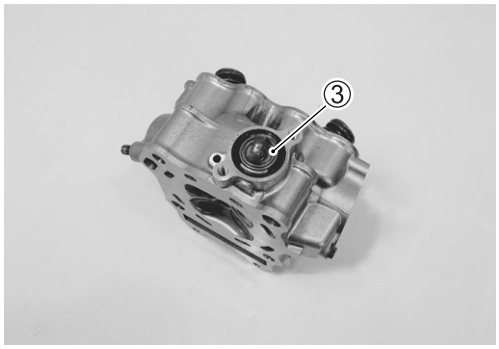

- Compress the valve spring using the special tools.
- Remove the cotter halves ④.

TOOL **09916-14510: Valve lifter**
09916-14910: Attachment
09916-84511: Tweezers

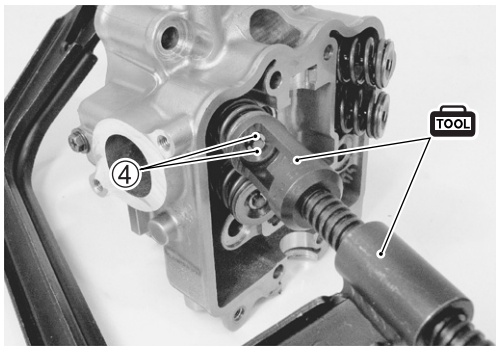

- Remove the valve spring retainer ⑤ and valve spring ⑥.
- Pull out the valve ⑦ from the combustion chamber side.

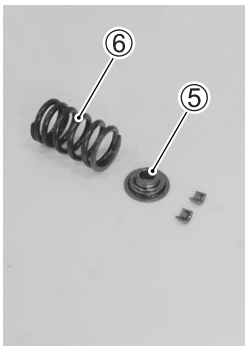

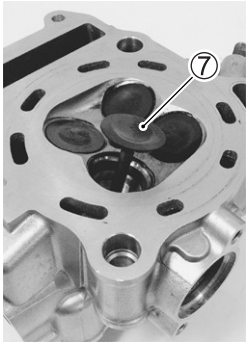

- Remove the oil seal ⑧ and spring seat ⑨.

CAUTION

Do not reuse the removed oil seal.

- Remove the other valves in the same manner as described previously.

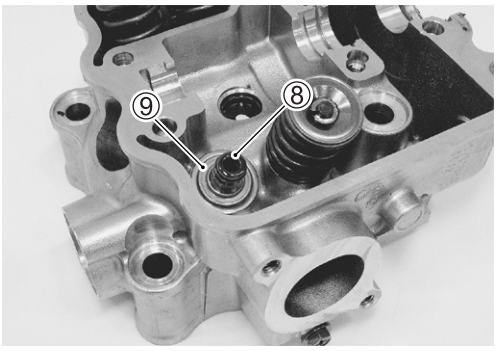

CYLINDER HEAD DISTORTION

- Decarbonize the combustion chambers.
- Check the gasket surface of the cylinder head for distortion with a straightedge and thickness gauge, taking a clearance reading at several places indicated.
- If the largest reading at any position of the straightedge exceeds the limit, replace the cylinder head.

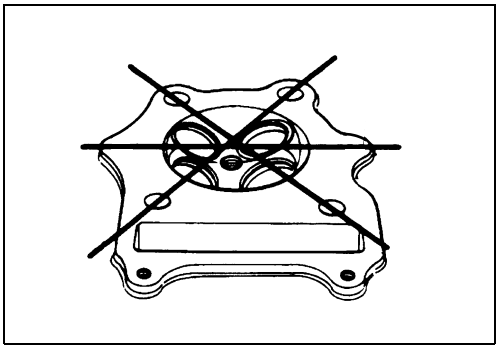

DATA Cylinder head distortion:
Service Limit: 0.05 mm

TOOL 09900-20803: Thickness gauge

VALVE FACE WEAR

- Visually inspect each valve face for wear. Replace any valve with an abnormally worn face. The thickness of the valve face decreases as the face wears. Measure the valve face Ⓣ. If it is out of specification replace the valve with a new one.

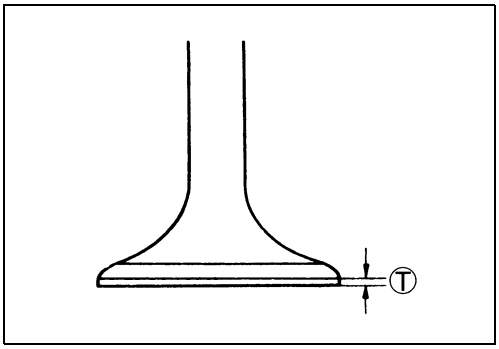

DATA Valve head thickness Ⓣ:
Service Limit: 0.5 mm

TOOL 09900-20102: Venier calipers

VALVE STEM RUNOUT

- Support the valve using V-blocks and check its runout using the dial gauge as shown.
- If the runout exceeds the service limit, replace the valve.

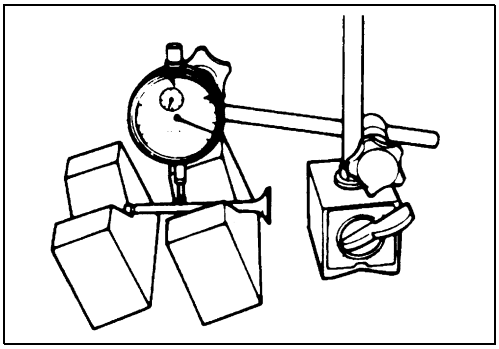

DATA Valve stem runout:
Service Limit: 0.05 mm

TOOL 09900-20607: Dial gauge (1/100 mm)
09900-20701: Magnetic stand
09900-21304: V-block (100 mm)

VALVE HEAD RADIAL RUNOUT

- Place the dial gauge at a right angle to the valve head face and measure the valve head radial runout.
- If it measures more than the service limit, replace the valve.

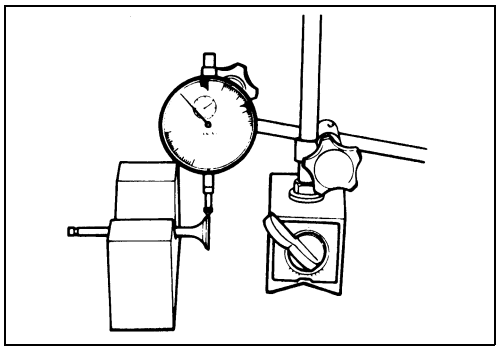

DATA Valve head radial runout:
Service Limit: 0.03 mm

TOOL 09900-20607: Dial gauge (1/100 mm)
09900-20701: Magnetic stand
09900-21304: V-block (100 mm)

VALVE STEM DEFLECTION

- Lift the valve about 10 mm from the valve seat.
- Measure the valve stem deflection in two directions, perpendicular to each other, by positioning the dial gauge as shown.
- If the deflection measured exceed the limit, then determine whether the valve or the guide should be replaced with a new one.

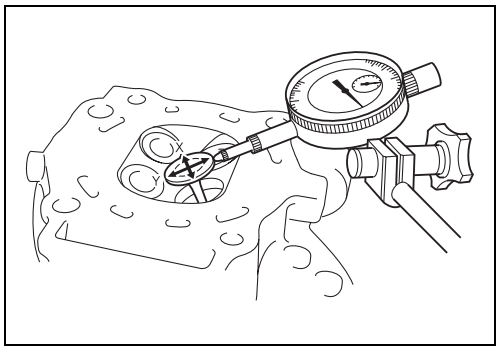

DATA Valve stem deflection (IN & EX):
Service Limit: 0.35 mm

TOOL 09900-20607: Dial gauge (1/100 mm)
09900-20701: Magnetic stand

VALVE STEM DIAMETER

- If the valve stem deflection exceeds the service limit, measure the valve stem outside diameter.If the diameter measured is within the standard range, replace the valve guide.
- For each of upper, middle and lower sections within the sliding range, two measurements, each in crosswise direction must be taken.

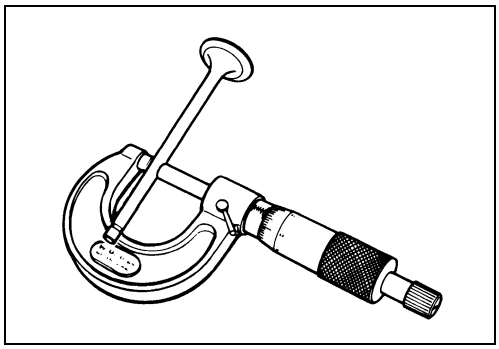

DATA Valve stem O.D.:
Standard (IN): 4.975 – 4.990 mm
(EX): 4.955 – 4.970 mm

TOOL 09900-20205: Micrometer (0 – 25 mm)

NOTE:
If valve guides have to be removed for replacement after inspecting related parts, carry out the steps shown in valve guide servicing. *(☞ 3-24)*

VALVE GUIDE SERVICING

- Using the valve guide remover ①, drive the valve guide out toward the camshaft side.

TOOL 09916-44310: Valve guide remover/installer

NOTE:

** Discard the removed valve guide subassemblies.*

** Only oversized valve guides are available as replacement parts. (Part No. 11115-14D71)*

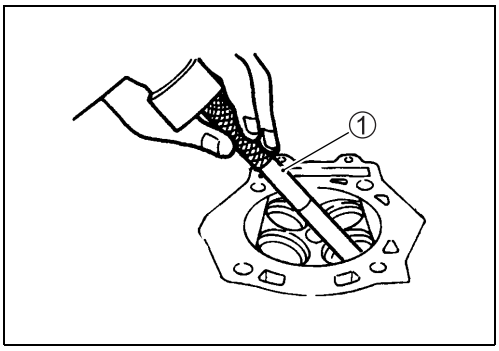

- Re-finish the valve guide hole in cylinder head with the reamer ② and handle ③.

TOOL 09916-34580: Valve guide reamer
09916-34542: Reamer handle

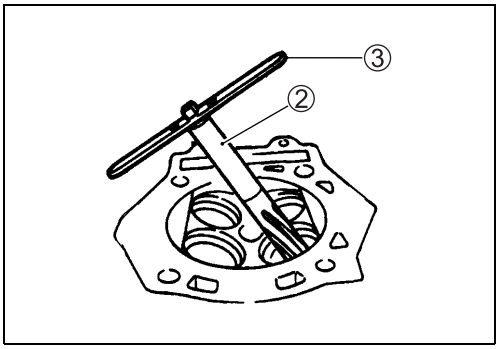

CAUTION

When refinishing or removing the reamer from the valve guide hole, always turn it clockwise.

- Cool down the new valve guide in a freezer for about one hour and heat the cylinder head to 100 °C – 150 °C with a hot plate.

CAUTION

Do not use a burner to heat the valve guide hole to prevent cylinder head distortion.

- Apply engine oil to the valve guide hole.
- Drive the valve guide into the hole using the valve guide installer ④ and attachment ⑤.

TOOL 09916-44310: Valve guide installer/remover
09916-53370: Attachment

NOTE:

install the valve guide until the attachment ⑤ contacts with the cylinder head ⑥.

Ⓐ: 13 mm (IN & EX)

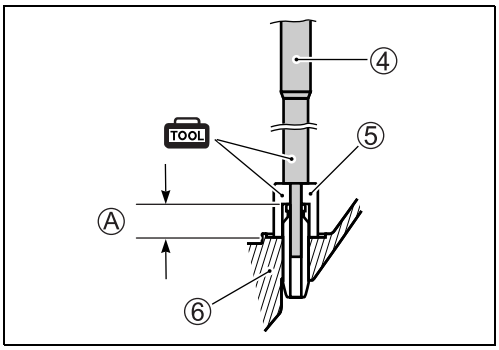

CAUTION

Failure to oil the valve guide hole before driving the new guide into place may result in a damaged guide or head.

- After installing the valve guide, re-finish the guiding bore using the reamer ⑦.
- Clean and oil the guides after reaming.

TOOL 09916-34570: Valve guide reamer
09916-34542: Reamer handle

NOTE:
** Be sure to cool down the cylinder head to ambient air temperature.*
** Insert the reamer from the combustion chamber and always turn the reamer handle clockwise.*

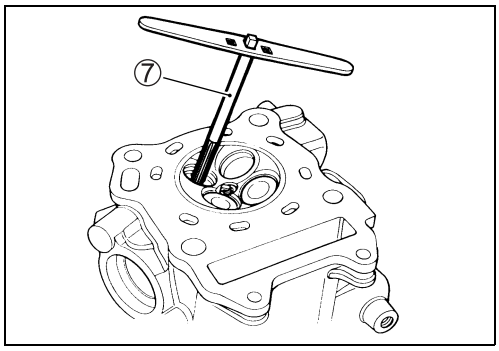

VALVE SEAT WIDTH INSPECTION

- Visually check the valve seat width on each valve face. If the valve face has worn abnormally, replace the valve with a new one.
- Coat the valve seat with a red lead (Prussian Blue) and set the valve in place. Rotate the valve with light pressure.
- Check that the transferred red lead (blue) on the valve face is uniform all around and in center of the valve face.

TOOL 09916-10911: Valve lapper set

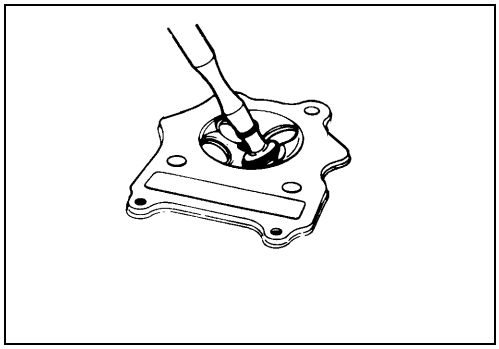

- If the seat width Ⓦ measured exceeds the standard value or seat width is not uniform, reface the seat using the seat cutter.

DATA Valve seat width Ⓦ:
Standard: 0.9 – 1.1 mm

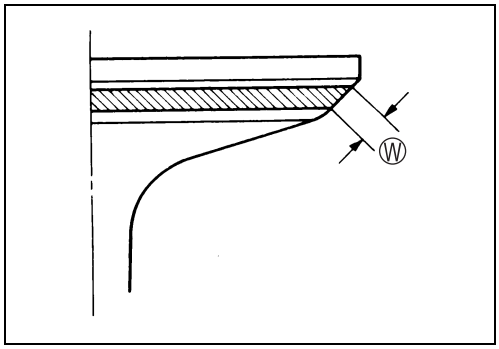

VALVE SEAT SERVICING

- The valve seats ① for both the intake valves and exhaust valves are machined to four different angles. The seat contact surface is cut at 45°.

	INTAKE	EXHAUST
Valve seat angles	30°, 45°, 60°	15°, 45°
Valve seat width	0.9 – 1.1 mm	
Valve diameter	22.0 mm	19.0 mm
Valve guide I.D.	5.000 – 5.012 mm	

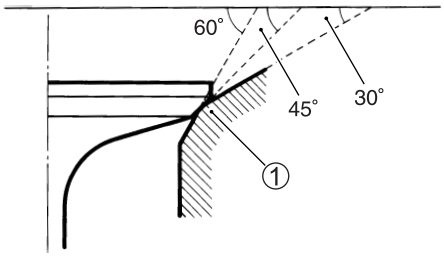

INTAKE

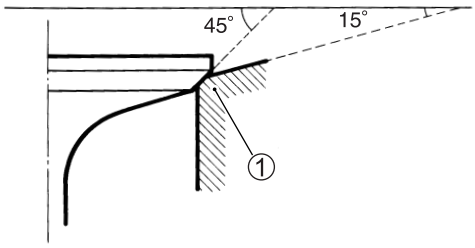

EXHAUST

CAUTION

*** The valve seat contact area must be inspected after each cut.**

*** Do not use lapping compound after the final cut is made. The finished valve seat should have a velvety smooth finish but not a highly polished or shiny finish. This will provide a soft surface for the final seating of the valve which will occur during the first few seconds of engine operation.**

NOTE:
After servicing the valve seats, be sure to check the valve clearance after the cylinder head has been reinstalled. (☞2-6)

- Clean and assemble the head and valve components. Fill the intake and exhaust ports with gasoline to check for leaks.
- If any leaks occur, inspect the valve seat and face for burrs or other things that could prevent the valve from sealing.

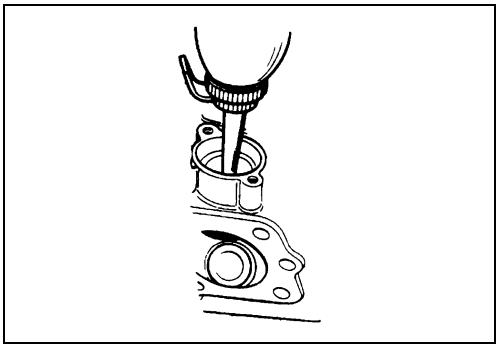

⚠ WARNING

Always use extreme caution when handling gasoline.

VALVE STEM END CONDITION

- Inspect the valve stem end face for pitting and wear. If pitting or wear is present, resurface the valve stem end. Make sure that the length Ⓐ is not less than 1.8 mm. If this length becomes less than 1.8 mm, replace the valve.

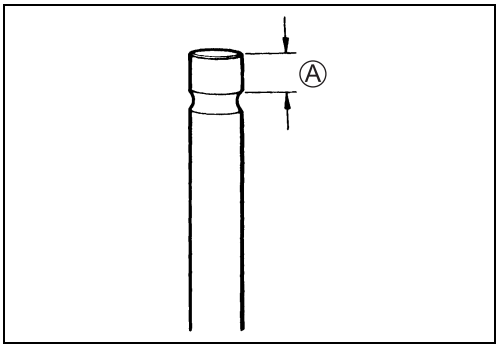

DATA Valve stem end length:
Service Limit: 1.8 mm

TOOL 09900-20102: Vernier calipers

VALVE SPRING

The force of the coil spring keeps the valve seat tight. Weakened spring result in reduced engine power output, and often account for the chattering noise coming from the valve mechanism.

- Check the valve spring for proper strength by measuring its free length and also by the force required to compress it.
- If the spring length is less than the service limit, or if the force required to compress the spring does not fall within the range specified, replace the spring.

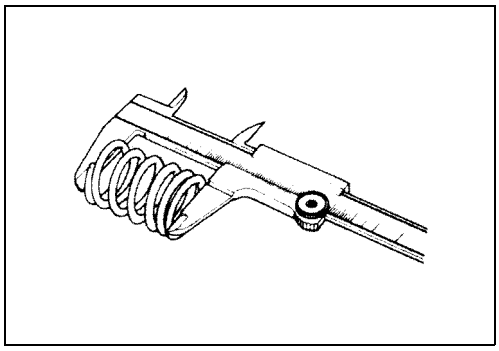

DATA Valve spring free length:
Service limit (IN & EX): 38.8 mm

TOOL 09900-20102: Vernier calipers

DATA Valve spring tension (IN & EX):
Standard: 182 – 210 N (18.6 – 21.4 kgf)/31.5 mm

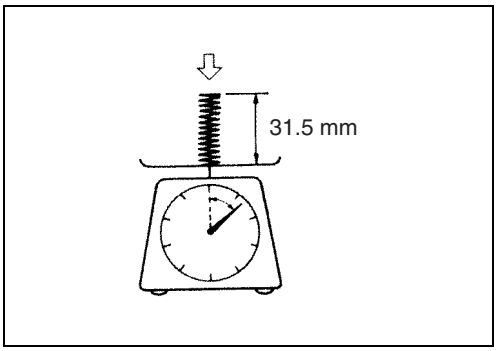

VALVE AND VALVE SPRING REASSEMBLY

- Install the valve spring seat.
- Apply MOLYBDENUM OIL SOLUTION to the oil seal ①, and press-fit it into position.

M/O MOLYBDENUM OIL SOLUTION

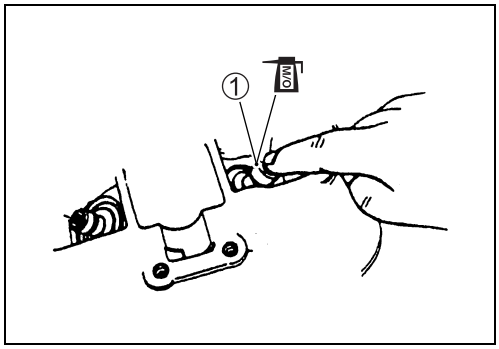

CAUTION

Do not reuse the removed oil seal.

- Insert the valve, with its stem coated with MOLYBDENUM OIL SOLUTION all around and along the full stem length without any break.

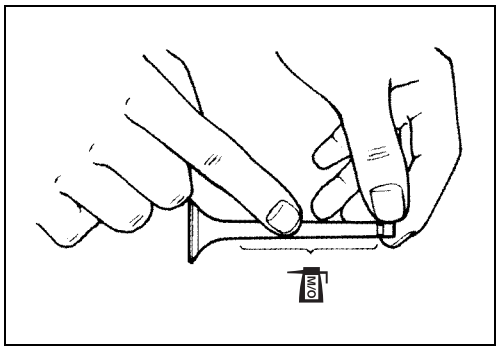

CAUTION

When inserting the valve, take care not to damage the lip of the oil seal.

M/O MOLYBDENUM OIL SOLUTION

- Install the valve spring with the small-pitch portion Ⓐ facing cylinder head.

Ⓐ Small-pitch portion
Ⓑ Large-pitch portion
Ⓒ UPWARD
Ⓓ Paint

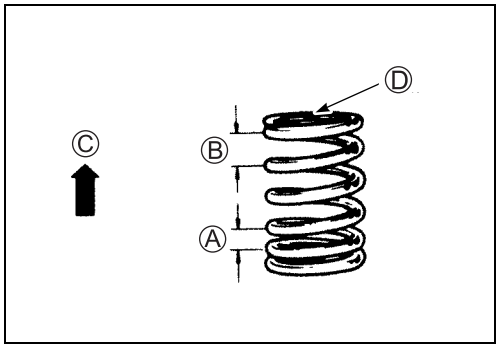

- Compress the valve spring using the special tools.

TOOL 09916-14510: Valve lifter
09916-14910: Attachment
09916-84511: Tweezers

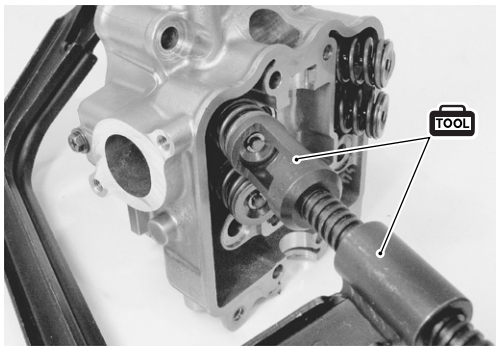

CAUTION

Compressing of the valve spring must be limited to the extent only necessary to prevent the spring from fatigue.

- Install the valve cotter halves ②.

CAUTION

Check that the rounded lip Ⓔ of the cotter is securely fitted in the groove Ⓕ in the valve stem end.

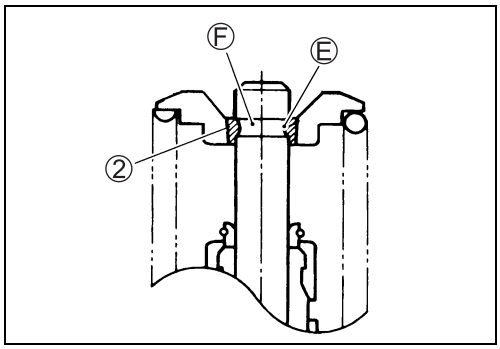

NOTE:
To facilitate assembly, apply a little grease to the valve cotter when fitting into the valve stem groove.

CAMSHAFT

CAM WEAR

- Check the camshaft for wear or damage.
- Measure the cam height Ⓗ with the micrometer.

DATA Cam height Ⓗ:
Service Limit: (IN) : 32.420 mm
(EX) : 32.160 mm

TOOL 09900-20202: Micrometer (25 – 50 mm)

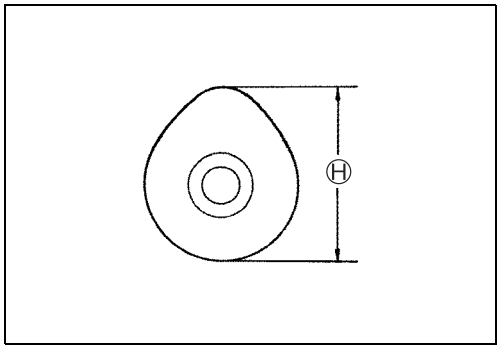

CAMSHAFT JOURNAL WEAR

- Determine whether or not each journal is worn down to the limit by measuring the oil clearance with the camshaft installed in place.
- Use the plastigauge to read the clearance at the widest portion, which is specified as follows:

DATA Camshaft journal oil clearance:
Service Limit: (ϕ22) 0.150 mm
(ϕ17.5) 0.150 mm

TOOL 09900-22302: Plastigauge

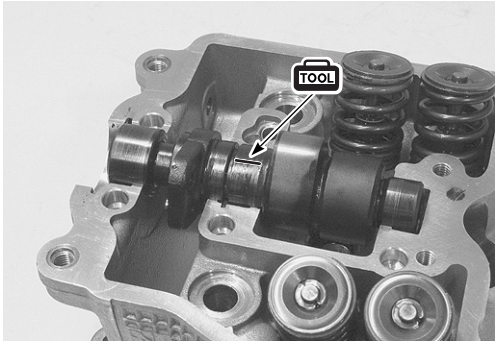

- Tighten the camshaft journal holder bolts evenly and diagonally to the specified torque.

Camshaft journal holder bolt: 10 N·m (1.0 kgf-m)

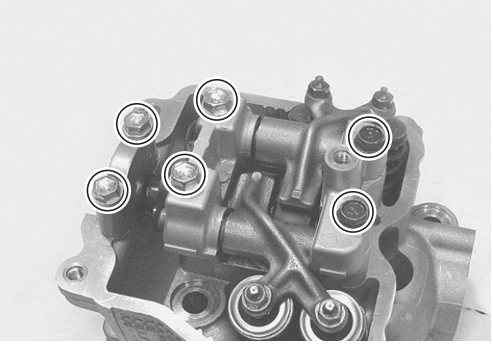

NOTE:
Do not rotate the camshaft with the plastigauge in place.

- Remove the camshaft holder, and read the width of the compressed plastigauge with envelope scale. This measurement should be taken at the widest part.

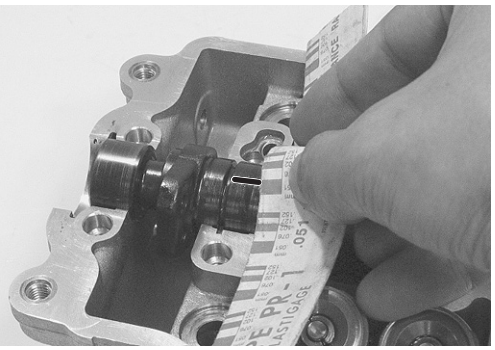

- If the camshaft journal oil clearance measured exceeds the limit, measure the inside diameter of the camshaft journal holder and outside diameter of the camshaft journal.
- Replace the camshaft or the cylinder head depending upon which one exceeds the specification.

DATA Camshaft journal holder I.D.:
Standard: (ϕ22) 22.012 – 22.025 mm
(ϕ17.5) 17.512 – 17.525 mm

TOOL 09900-20602: Dial gauge (1/1 000 mm)
09900-22401: Small bore gauge (10 – 18 mm)
09900-22403: Small bore gauge (18 – 35 mm)

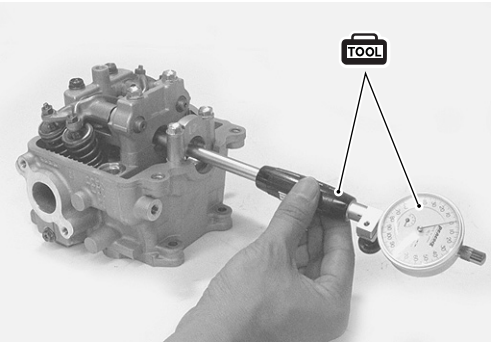

DATA Camshaft jouranal O.D.:
Standard: (ϕ22) 21.959 – 21.980 mm
(ϕ17.5) 17.466 – 17.484 mm

TOOL 09900-20205: Micrometer (0 – 25 mm)

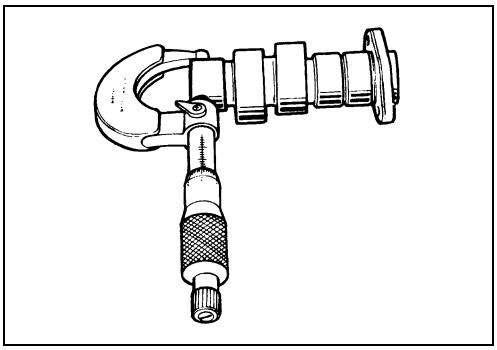

CAMSHAFT RUNOUT

- Measure the runout using the dial gauge.
- Replace the camshaft if the runout exceeds the limit.

DATA Camshaft runout:
Service Limit: 0.10 mm

TOOL 09900-20607: Dial gauge (1/100 mm)
09900-20701: Magnetic stand
09900-21304: V-block (100 mm)

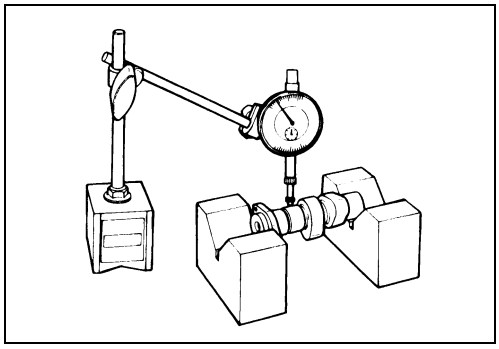

CAM CHAIN TENSION ADJUSTER

CAM CHAIN TENSION ADJUSTER INSPECTION

- Check that the push rod ① can slide smoothly with the lock ② of the ratchet mechanism released. If it does not slide smoothly or the ratchet mechanism is worn or damaged, replace the cam chain tension adjuster with a new one.

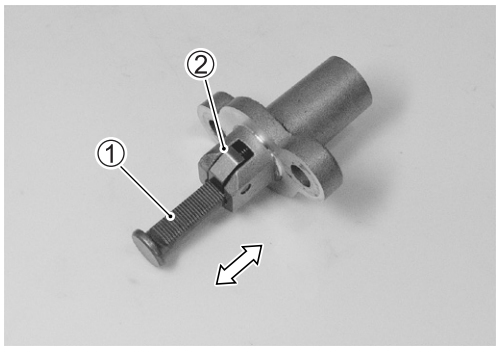

CAM CHAIN TENSIONER

INSPECTION

- Check the contacting surface of the cam chain tensioner.
- If it is worn or damaged, replace it with a new one.

CAM CHAIN TENSIONER INSTALLATION

- Install the cam chain tensioner ① to the cylinder head.
- Install the washer ② to the bolt ③, and then tighten it to the specified torque.

Cam chain tensioner bolt: 13 N·m (1.3 kgf-m)

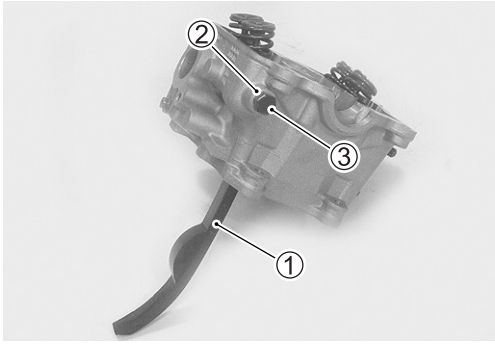

CAM CHAIN GUIDE

INSPECTION

- Check the contacting surfaces of the cam chain guide.
- If it is worn or damaged, replace it with a new one.

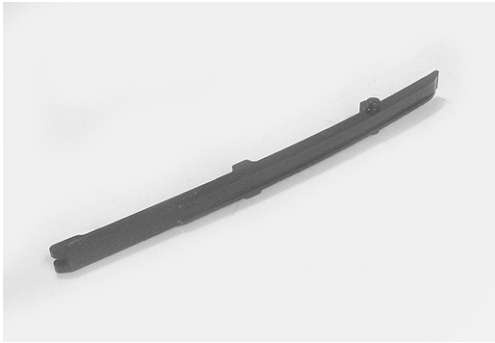

CYLINDER

CYLINDER DISTORTION

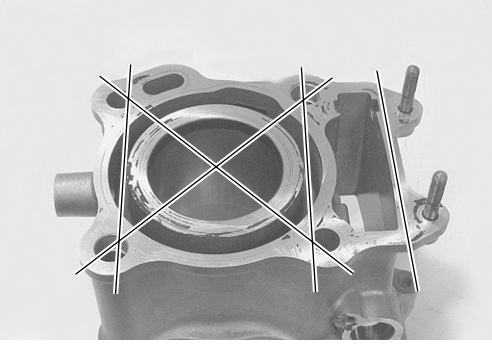

- Check the gasket surface of the cylinder for distortion with a straightedge and thickness gauge, taking a clearance reading at several places as indicated.
- If the largest reading at any position of the straightedge exceeds the limit, replace the cylinder with a new one.

DATA Cylinder distortion:
Service Limit: 0.05 mm

TOOL 09900-20803: Thickness gauge

CYLINDER BORE

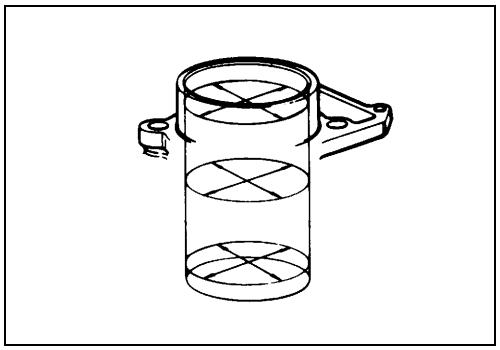

- Inspect the cylinder wall for any scratches, nicks or other damage.
- Measure the cylinder bore diameter at six places.

DATA Cylinder bore:
Standard: 57.000 – 57.015 mm

TOOL 09900-20530: Cylinder gauge set

PISTON

PISTON DIAMETER

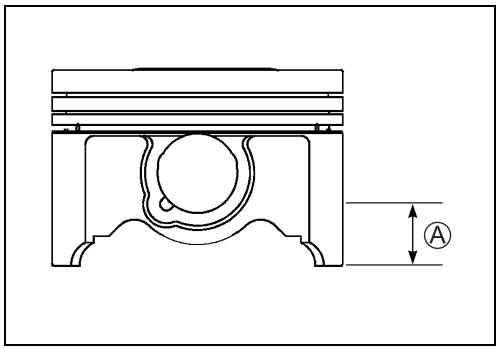

- Using a micrometer, measure the piston outside diameter at 15 mm Ⓐ from the piston skirt end.
- If the measurement is less than the limit, replace the piston.

DATA Piston diameter:
Service Limit: 56.880 mm
at 15 mm from the skirt end

TOOL 09900-20203: Micrometer (50 – 75 mm)

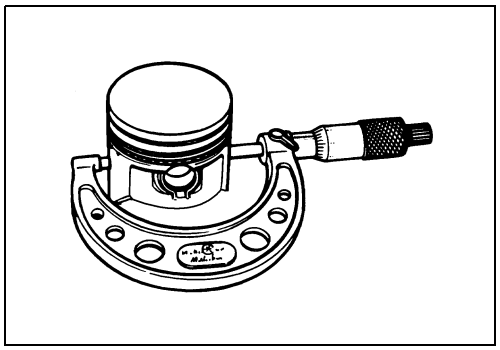

PISTON-TO-CYLINDER CLEARANCE

- Subtract the piston diameter from the cylinder bore diameter.
- If the piston-to-cylinder clearance exceeds the service limit, replace the cylinder or the piston, or both.

DATA Piston-to-cylinder clearance:
Service Limit: 0.120 mm

PISTON PIN AND PIN BORE

- Measure the piston pin bore diameter using the small bore gauge.
- If the measurement is out of specification, replace the piston.

DATA Piston pin bore I.D.:
Service Limit: 16.030 mm

TOOL 09900-20602: Dial gauge (1/1 000 mm)
09900-22401: Small bore gauge (10 – 18 mm)

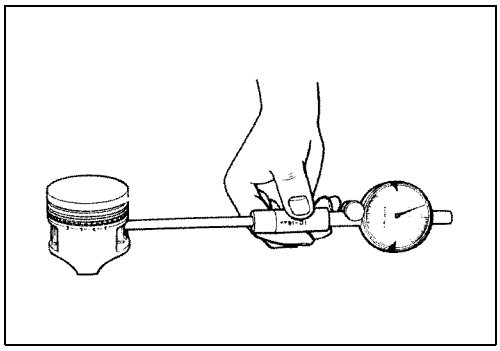

- Measure the piston pin outside diameter at three positions using the micrometer.
- If any of the measurements is out of specification, replace the piston pin.

DATA Piston pin O.D.:
Service Limit: 15.980 mm

TOOL 09900-20205: Micrometer (0 – 25 mm)

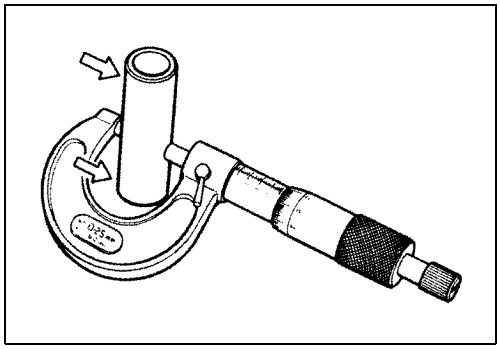

PISTON RING-TO-GROOVE CLEARANCE

- Measure the side clearances of the 1st and 2nd piston rings using the thickness gauge.
- If any of the clearances exceeds the limit, replace both the piston and piston rings.

TOOL 09900-20803: Thickness gauge
09900-20205: Micrometer (0 – 25 mm)

DATA Piston ring-to-groove clearance:
Service Limit (1st) : 0.180 mm
(2nd) : 0.150 mm

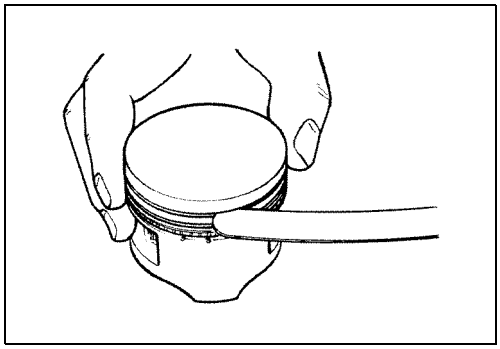

DATA Piston ring groove width:
Standard (1st) : 1.01 – 1.03 mm
(2nd) : 0.81 – 0.83 mm
(Oil) : 1.51 – 1.53 mm

DATA Piston ring thickness:
Standard (1st) : 0.97 – 0.99 mm
(2nd) : 0.77 – 0.79 mm

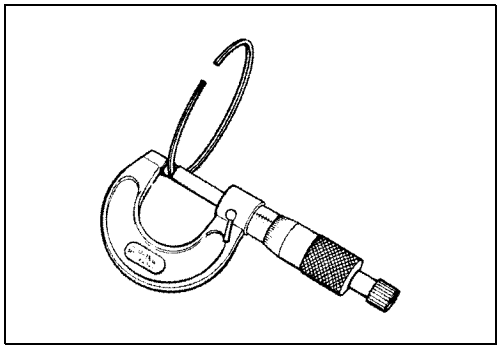

PISTON RING FREE END GAP AND PISTON RING END GAP

- Measure the piston ring free end gap using the vernier calipers.

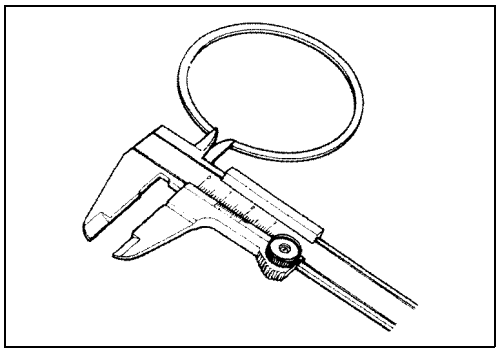

- Next, fit the piston ring squarely into the cylinder and measure the piston ring end gap using the thickness gauge.
- If any of the measurements exceeds the service limit, replace the piston ring with a new one.

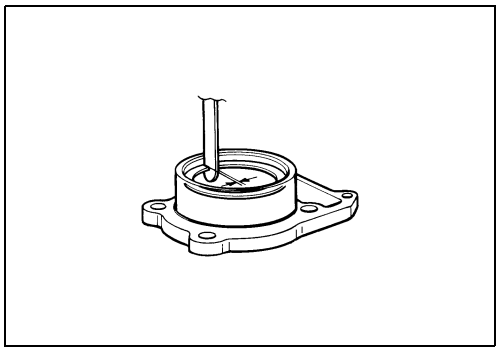

DATA Piston ring free end gap:
Service Limit (1st) : 5.6 mm
(2nd) : 4.9 mm

TOOL 09900-20102: Vernier calipers

DATA Piston ring end gap:
Service Limit (1st) : 0.50 mm
(2nd) : 0.50 mm

TOOL 09900-20803: Thickness gauge

CONROD AND CRANKSHAFT

CONROD SMALL END INSIDE DIAMETER INSPECTION

- Using the dial calipers, measure the conrod small end inside diameter both in vertical and horizontal directions. If any of the measurements exceeds the service limit, replace the conrod.

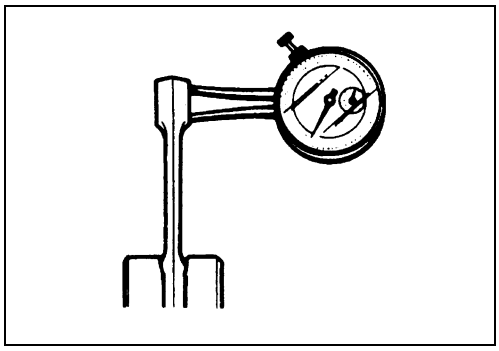

DATA Conrod small end I.D.:
Service Limit: 16.040 mm

TOOL 09900-20605: Dial calipers (1/100 mm, 10 – 34 mm)

CONROD BIG END SIDE CLEARANCE INSPECTION

- Using a thickness gauge, measure the side clearance at the conrod big end. If the measurement is out of standard value, measure the conrod big end width and crank pin width individually to determine, which one is to be replaced.

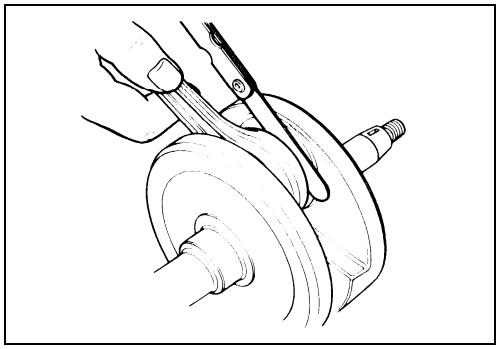

DATA Conrod big end side clearance:
Standard: 0.10 – 0.65 mm
Service Limit: 1.0 mm

TOOL 09900-20803: Thickness gauge

CONROD BIG END BEARING

- Check that the conrod turns smoothly without play and noise.

CONROD DEFLECTION INSPECTION

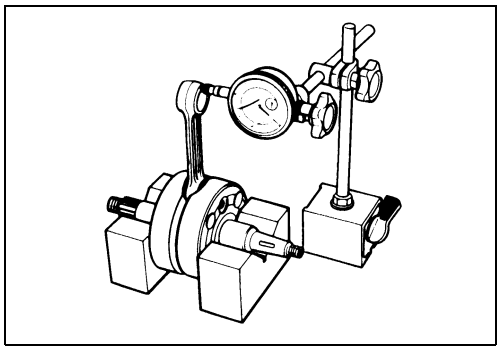

- Move the small end sideways while holding the big end immovable in thrust direction.
- Measure the amount of deflection.
- Turn the conrod and see if it moves smoothly without play and noise.
- This method can check the extent of wear on the parts of the conrod's big end.

DATA Conrod deflection:
Service Limit: 3.0 mm

TOOL 09900-20607: Dial gauge (1/100 mm)
09900-20701: Magnetic stand
09900-21304: V-block (100 mm)

CRANKSHAFT RUNOUT INSPECTION

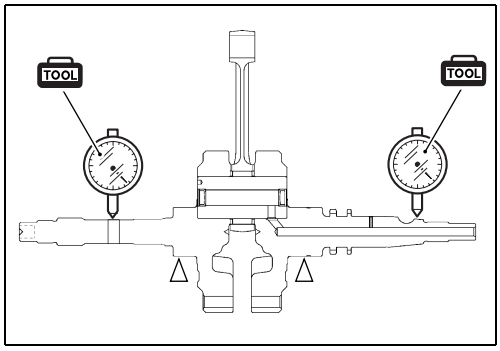

- With the right and left crank journals supported with V-block, turn the crankshaft slowly. At this time, measure the crankshaft end runout using a dial gauge. If the runout exceeds the service limit, replace the crankshaft.

DATA Crankshaft runout:
Service Limit: 0.10 mm

TOOL 09900-20607: Dial gauge (1/100 mm)
09900-20701: Magnetic stand
09900-21304: V-block (100 mm)

NOTE:
Set the V-blocks so that the crankshaft becomes horizontal.

WIDTH BETWEEN CRANKSHAFT WEBS

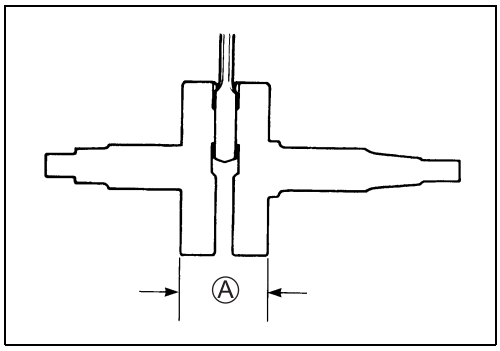

- Measure the width between crankshaft webs Ⓐ.

DATA Width between crankshaft webs Ⓐ:
Standard: 63.9 – 64.1 mm

OIL PUMP

INSPECTION

- Rotate the oil pump by hand and check that it moves smoothly.
- If it does not move smoothly, replace the oil pump assembly with a new one.

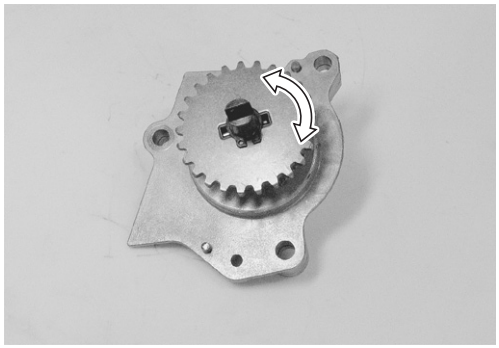

DISASSEMBLY

- Remove the circlip ①.
- Remove the oil pump driven gear ②.

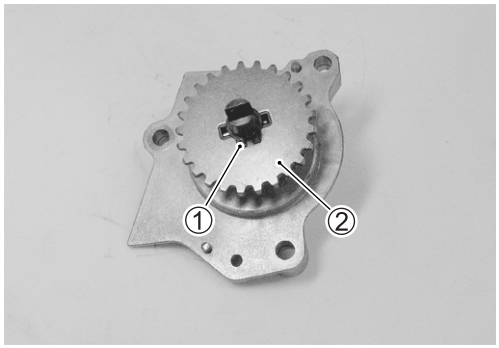

- Remove the pin ③ and washer ④.

CAUTION

> **Do not attempt to disassemble the oil pump assembly. The oil pump is available only as an assembly.**

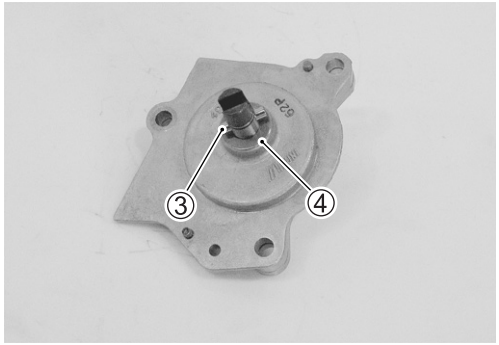

REASSEMBLY

Reassemble the oil pump driven gear in the reverse order of disassembly. Pay attention the following point:

- Install new circlip to the side where the thrust is as shown in the illustration.

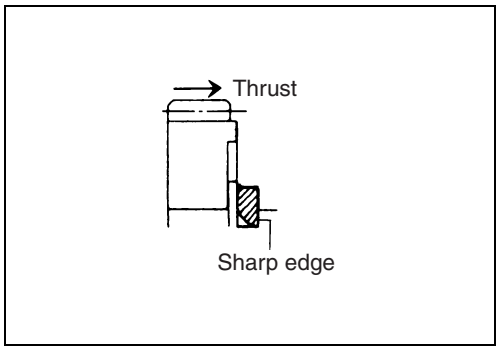

OIL SUMP FILTER

- Clean the oil sump filter using compressed air.
- Replace it with a new one if necessary.

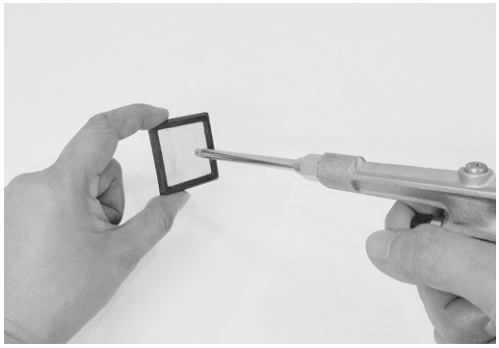

MOVABLE DRIVE FACE ASSEMBLY

DISASSEMBLY

- Remove the spacer ①.

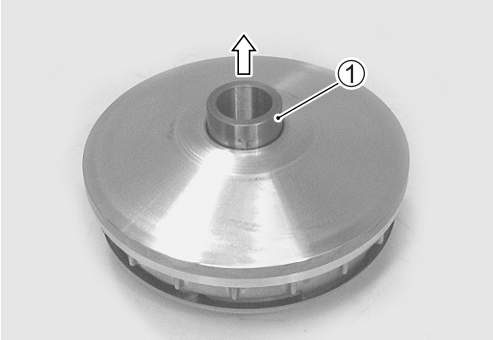

- Remove the movable drive face cover ②.

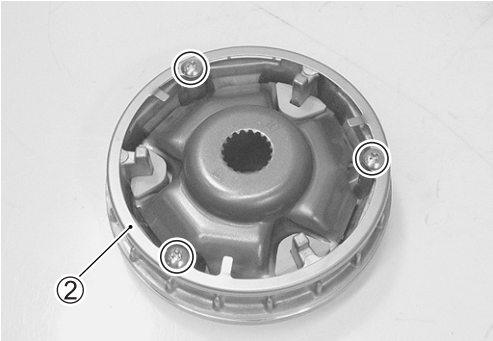

- Remove the movable drive plate ③.
- Remove the dampers ④.

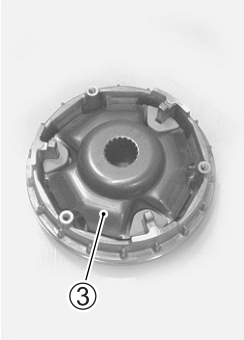

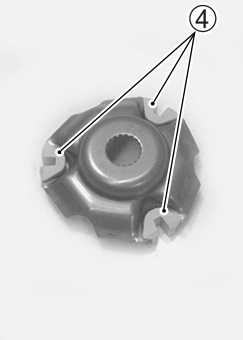

- Remove the rollers ⑤.

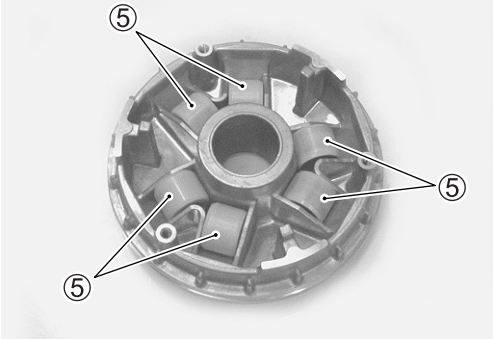

INSPECTION

Movable face

- Inspect each movable drive face for any stepped wear. If any defects are found, replace the drive face with a new one.

Spacer

- Inspect the spacer for any wear or damage. If any defects are found, replace the spacer with a new one.

Roller

- Inspect the rollers for abnormal wear or other damage. If any defects are found, replace the rollers as a set.

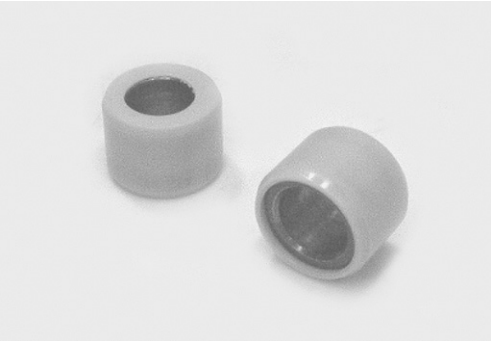

REASSEMBLY

Assemble the movable drive face in the reverse order of disassembly.

CLUTCH SHOE/MOVABLE DRIVEN FACE

DISASSEMBLY

- Attach the special tool to the clutch shoe/movable driven face assembly and compress the assembly by turning in the special tool handle.
- Remove the clutch shoe nut ①.

TOOL 09922-31420: Clutch spring compressor

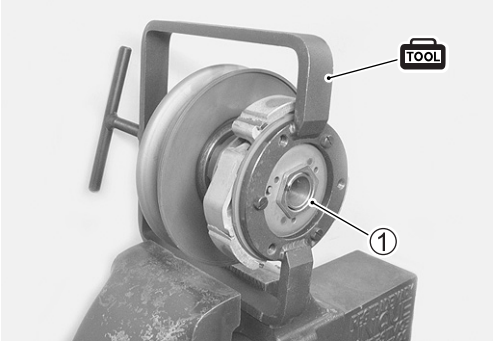

CAUTION

Since a high spring force applies to the clutch shoe/movable driven face assembly, care must be used so as not to cause the clutch shoe and movable driven face to come off abruptly.

- Loosen the special tool handle slowly and remove the clutch shoe ② and spring.

CAUTION

Do not attempt to disassemble the clutch shoe.

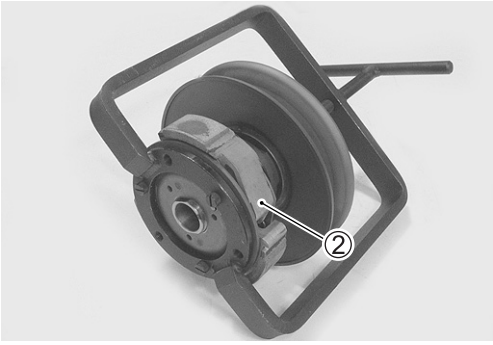

- Remove the movable driven face seat ③.

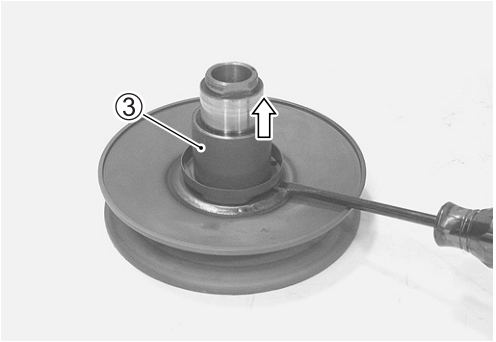

- Remove three pins ④ together with rollers.

- Remove the rollers ⑤ from the pins.

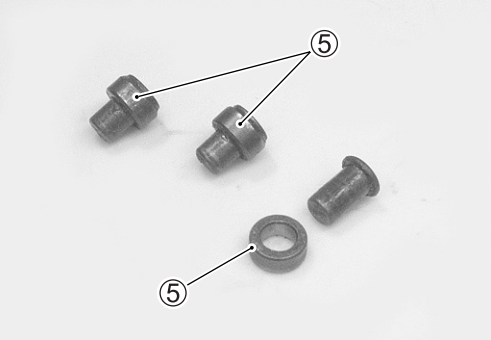

- Remove the movable driven face ⑥ from the fixed driven face ⑦.

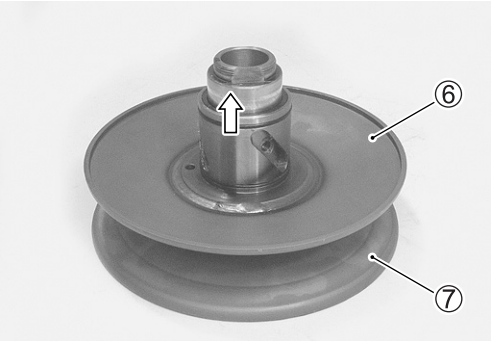

- Remove the O-rings ⑧ and oil seal ⑨.

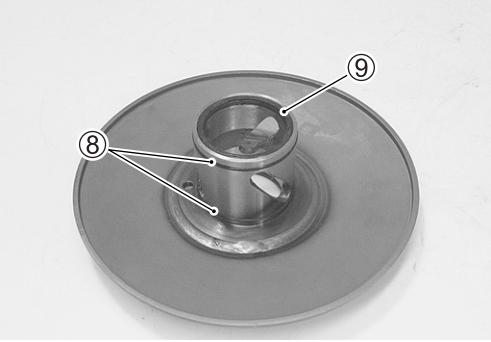

- Remove the oil seal ⑩.

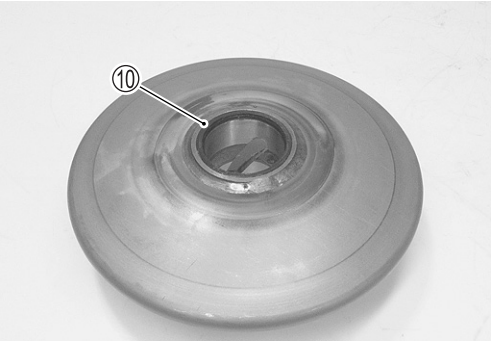

- Remove the needle bearing using the special tool.

TOOL 09921-20240: Bearing remover set (20 mm)

NOTE:
If abnormal noise does not occur, it is not necessary to remove the bearing.

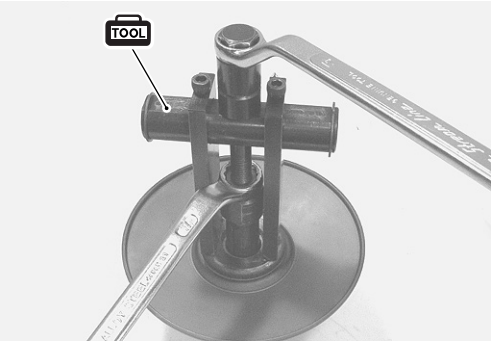

- Remove the snap ring ⑪.

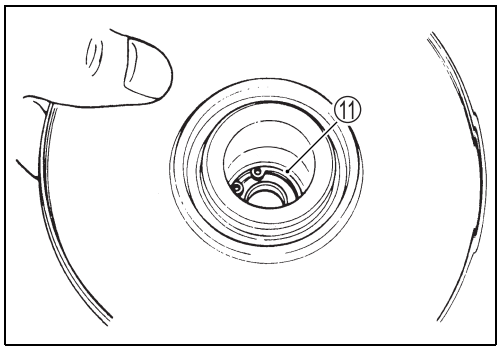

- Remove the bearing using the special tool.

TOOL 09913-70210: Bearing installer set (22 mm)

NOTE:
If abnormal noise does not occur, it is not necessary to remove the bearing.

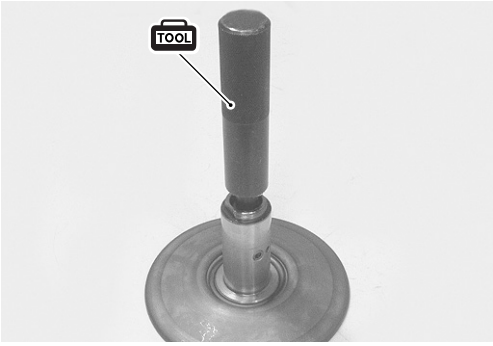

INSPECTION

Clutch shoe

- Check the boss and centrifugal weight fulcrum sections for looseness, damage and operation.
- Check the clutch shoe for damage and fouling with oil on the surface.

- Measure the thickness Ⓐ of clutch shoe center area. If the thickness is thinner than the service limit, replace the shoe assembly with a new one.

DATA Clutch shoe thickness:
Service Limit: 2.0 mm

TOOL 09900-20102: Vernier calipers

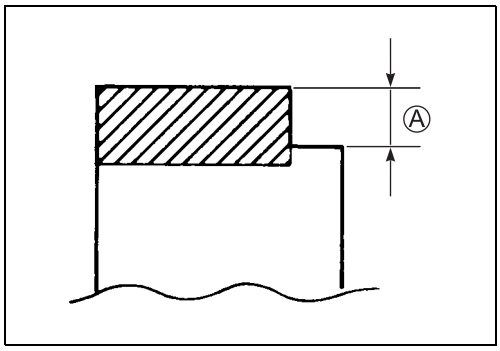

Clutch housing

- Measure the inside diameter Ⓐ of the clutch housing.
  If the measurement exceeds the service limit, replace the clutch housing with a new one.

DATA Clutch housing I.D.:
Service Limit: 125.5 mm

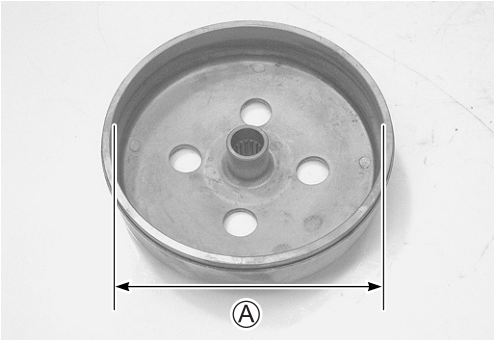

Movable driven face spring

- Measure the spring free length Ⓐ using the vernier calipers.
- If the length is shorter than the service limit, replace the spring with a new one.

DATA Movable driven face spring free length:
Service Limit: 123.5 mm

TOOL 09900-20102: Vernier calipers

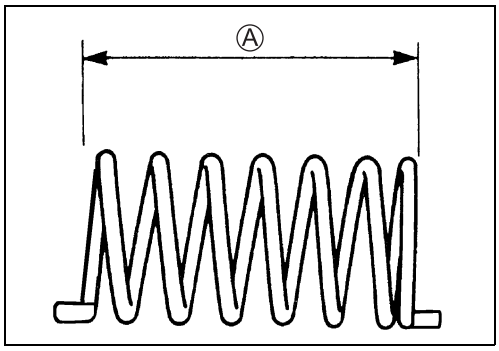

Drive V-belt

- Check that the drive V-belt is free from any greasy substance.
- Check the contact surface for crack or other damage.
- Measure the width of the belt using the vernier calipers.
  If the measurement exceeds the service limit or crack or other damage exists, replace the belt with a new one.

DATA Service Limit: 21.4 mm

TOOL 09900-20102: Vernier Calipers

CAUTION

If grease or oil is present on the surface, degrease the belt thoroughly.

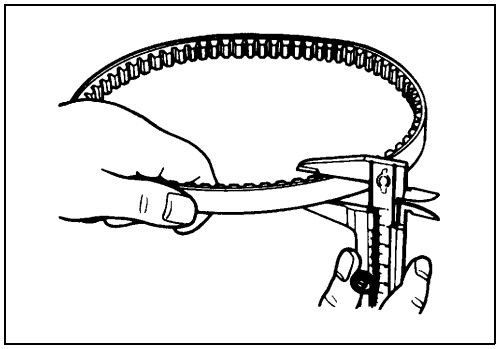

Driven face

- Inspect the driven face surface for stepped wear. If any defects are found, replace if with a new one.

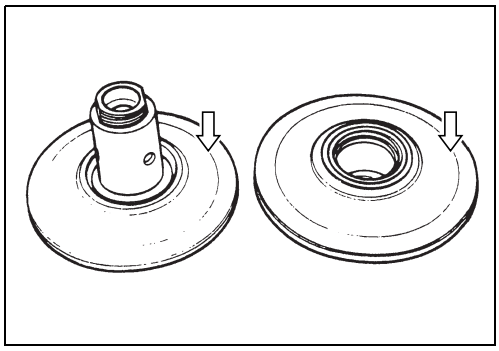

Movable driven pin and roller

- Inspect the movable driven pins and rollers for abnormal wear or damage. If any defects are noted, replace the pin and/or roller with new ones.

REASSEMBLY

- Install the bearing ① to the fixed driven face ② using an appropriate spacer.

CAUTION

Use a new bearing.

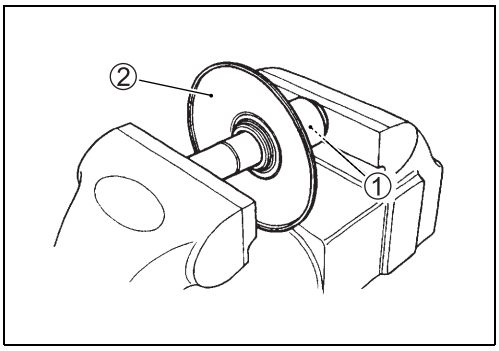

- Install the snap ring.

CAUTION

Use a new snap ring.

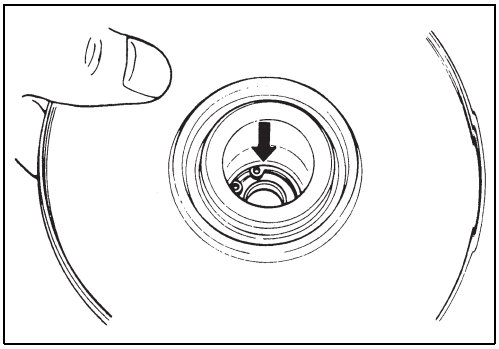

- Install needle bearing ③ using an appropriate specer.

CAUTION

Use a new bearing.

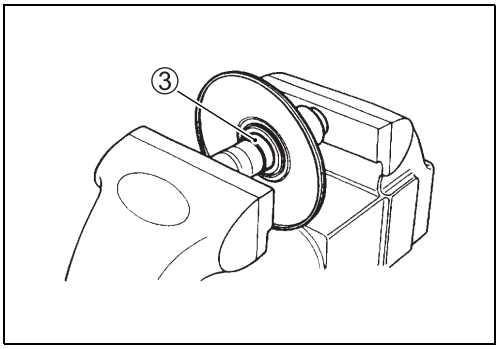

- Apply grease to both bearings.

CAUTION

Fill sufficient grease in the grease groove inside the fixed driven face and also on the bearings.

99000-25010: SUZUKI SUPER GREASE "A" or equivalent

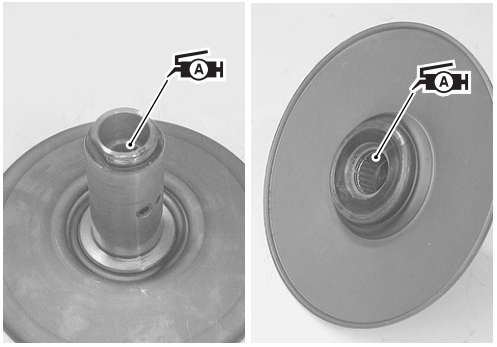

- Install the oil seals ④ and O-rings ⑤ to the movable driven face.

09913-70210: Bearing installer set

CAUTION

Use new oil seals and O-rings.

- Apply grease both to the lip of oil seals and O-rings.

99000-25010: SUZUKI SUPER GREASE "A" or equivalent

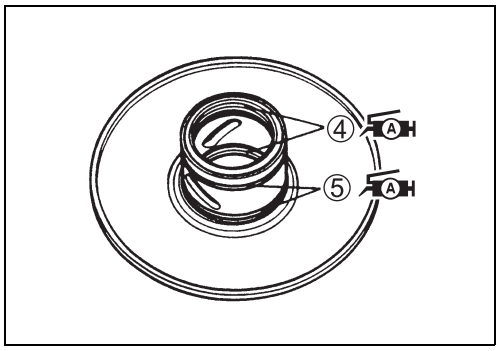

- Apply grease to the grease groove and sliding surface of movable driven face ⑥.

99000-25010: SUZUKI SUPER GREASE "A" or equivalent

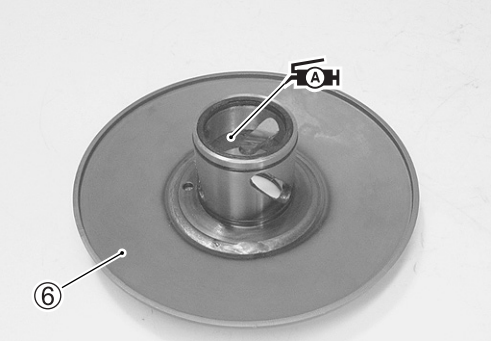

- Install the movable driven face ⑥ to the fixed driven face ②.

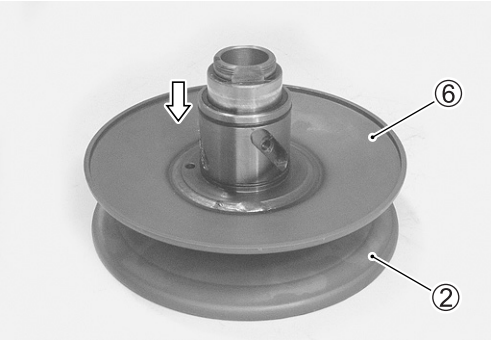

- Install the movable driven pins ⑦ and rollers to the pin holes with grease coated.

99000-25010: SUZUKI SUPER GREASE "A" or equivalent

- Check that the movable driven face moves smoothly.

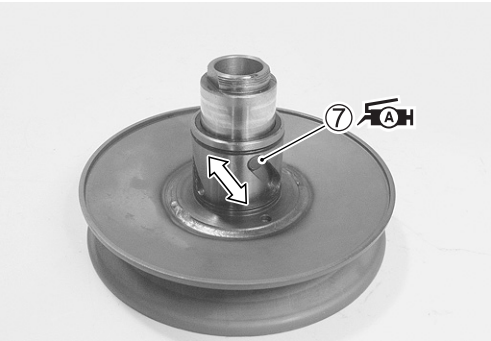

- Install the movable driven face seat ⑧.

CAUTION

Align the hole on the seat with the hole on the movable driven face.

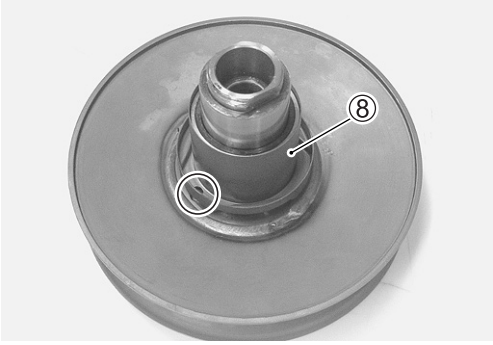

- Set the spring and clutch shoe to the movable driven face.

CAUTION

Engage each end of the spring with the respective holes, one provided on the movable driven face and the other on the clrtch shoe plate.

- Engage the pawls of special tool to the holes of clutch shoe plate.

TOOL 09922-31420: Clutch spring compressor

- While the special tool handle is being turned in slowly, engage two flats on the end of movable driven face with the same shaped hole on the clutch shoe plate.

- Check that the pawls on the special tool is securely fitted into the holes on the clutch shoe plate and tighten the clutch shoe nut ⑨ to the specified torque.

Clutch shoe nut: 80 N·m (8.0 kgf-m)

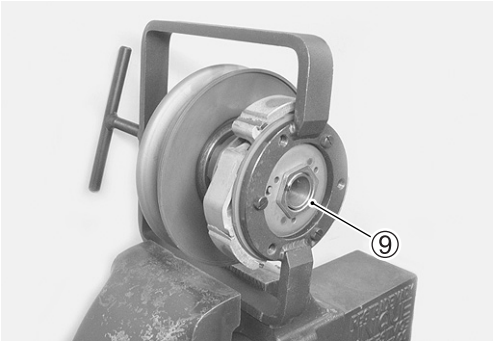

STARTER CLUTCH

INSPECTION

- Install the starter driven gear onto the starter clutch and turn the starter driven gear by hand to inspect the starter clutch for a smooth movement. The gear turns one direction only. If a large resistance is felt for rotation, inspect the starter clutch for damage or inspect the starter clutch contacting surface of the starter driven gear for wear or damage.
- If they are found to be damaged, replace them with new ones.

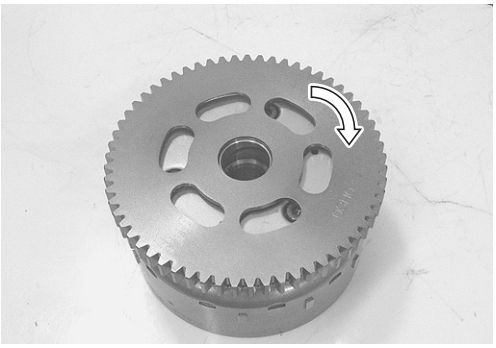

- Inspect the starter driven gear bushing for any damages.

DISASSEMBLY

- Remove the starter clutch ① and shim ②.

TOOL 09930-44520: Rotor holder

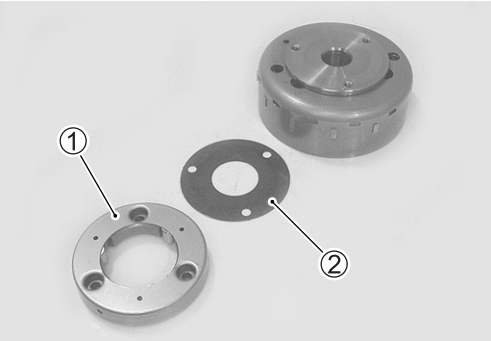

- Remove the rollers ③, push pieces ④ and springs ⑤.

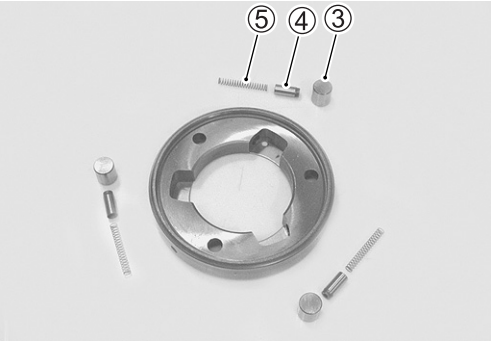

REASSEMBLY

Reassemble the starter clutch in the reverse order of removal. Pay attention to the following points:

- Degrease the bolts and bolt holes.
- Apply THREAD LOCK SUPER to the bolts and tighten them to the specified torque.

1322 99000-32110: THREAD LOCK SUPER "1322" or equivalent

TOOL 09930-44520: Rotor holder

Starter clutch bolt: 10 N·m (1.0 kgf-m)

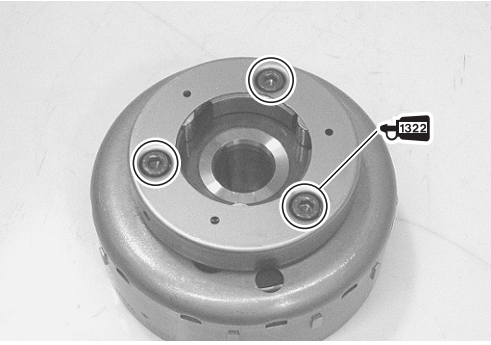

GENERATOR COVER

DISASSEMBLY

- Remove the generator stator ① and CKP sensor ②.

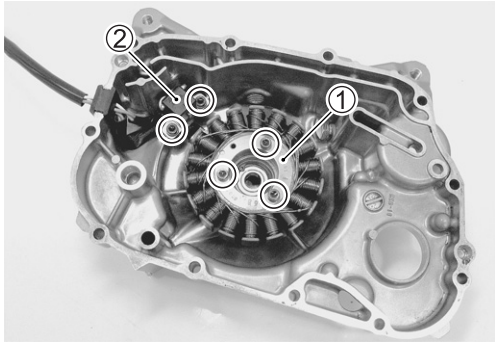

- Remove the snap ring ③.

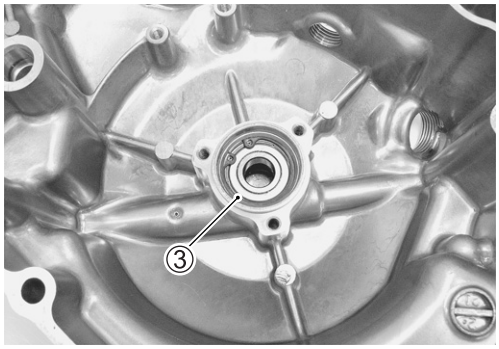

- Remove the bearing using the special tool.

TOOL 09921-20240: Bearing remover set (12 mm)

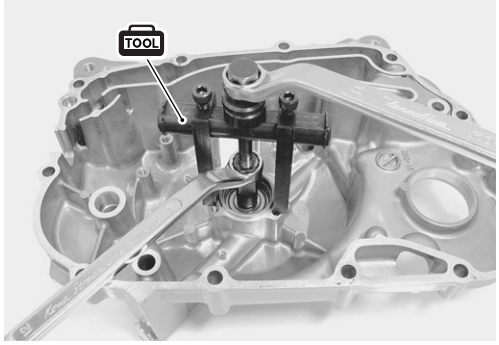

- Remove the oil seal ④.

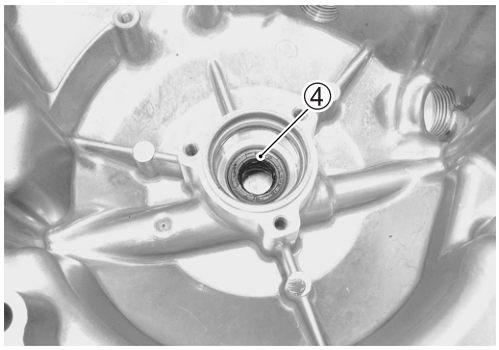

REASSEMBLY

Reassemble the generator cover in the reverse order of disassembly. Pay attention to the following points:

- Install oil seal using the special tool.

TOOL 09913-70210: Bearing installer set (22 mm)

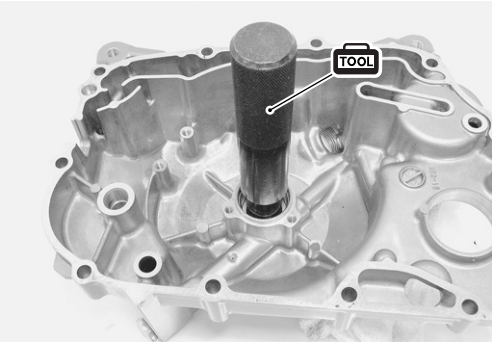

CAUTION

> *** Use a new oil seal.**
> *** Install the oil seal with the marked code toward outside.**

- Install new bearing using the special tool.
- Install new snap ring.

TOOL 09913-70210: Bearing installer set (25 mm)

- Pass the generator lead wires ① under the CKP sensor ②.

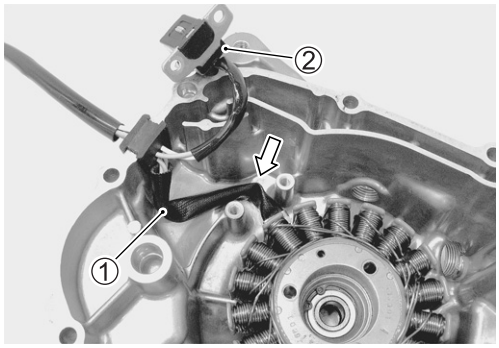

- Tighten the generator stator bolts ③ to the specified torque.

Generator stator bolt: 5 N·m (0.5 kgf-m)

- Tighten the CKP sensor bolts ④ to the specified torque.

CKP sensor bolt: 5 N·m (0.5 kgf-m)

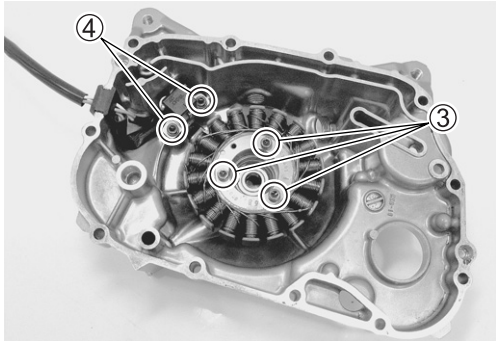

FINAL GEAR BOX COVER

DISASSEMBLY

- Remove the O-ring ①.

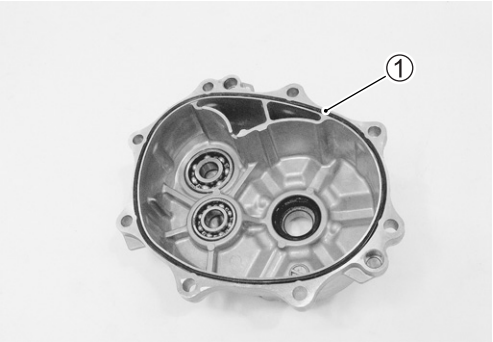

- Remove the bearing retainer ②.

- Remove the bearing ③ using the special tool.

TOOL 09921-20240: Bearing remover set

NOTE:
If abnormal noise does not occur, it is not necessary to remove the bearing.

CAUTION

The removed bearing and oil seal should be replaced with new ones.

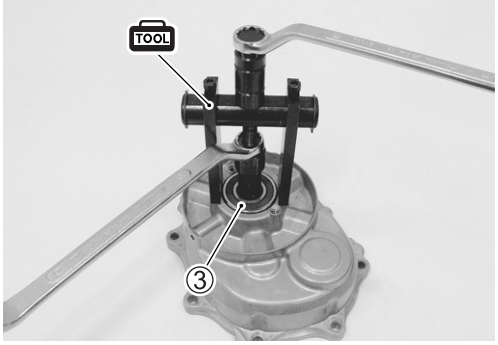

- Remove the oil seal.

TOOL 09913-50121: Oil seal remover

- Remove the bearing ④ using the special tool.

TOOL 09921-20240: Bearing remover set

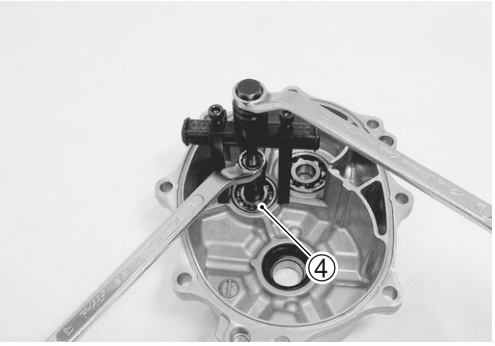

- Remove the bearing ⑤ using the special tools.

TOOL 09921-20210: Bearing remover
09930-30104: Sliding shaft

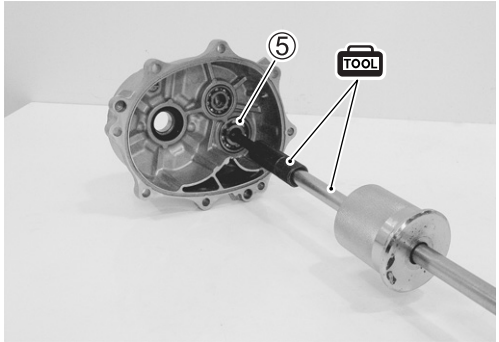

REASSEMBLY

- Install the bearings ① and ② using the special tool.

TOOL 09913-70210: Bearing installer set (40 mm, 35 mm)

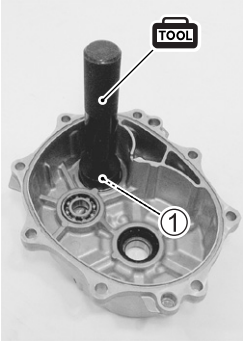

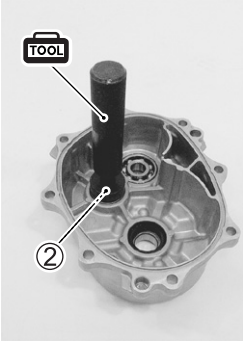

- Install the oil seal.

TOOL 09913-70210: Bearing installer set

- Apply grease to the lip of oil seal.

Ⓐ 99000-25010: SUZUKI SUPER GREASE "A" or equivalent

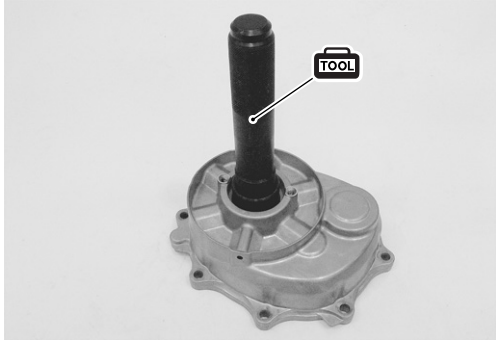

- Install the bearing ③ using the special tool.

TOOL 09913-70210: Bearing installer set (47 mm)

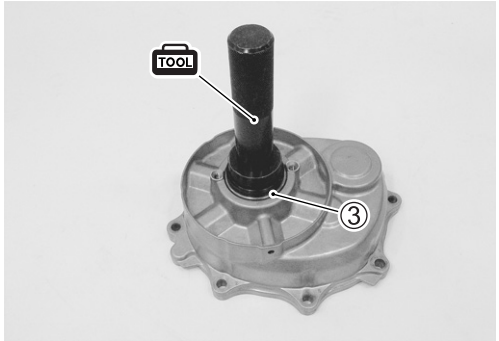

- Install the bearing retainer ④ toward the upper side Ⓐ of the engine.

Bearing retainer screw: 8 N·m (0.8 kgf-m)

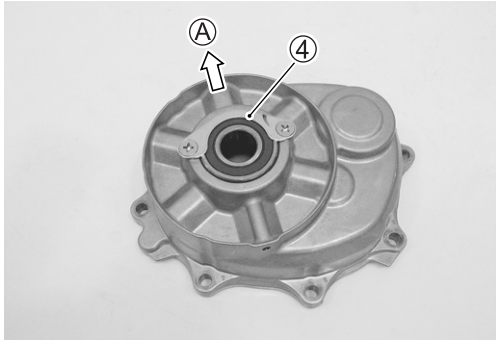

FINAL GEAR

INSPECTION

Inspect the removed gears and shafts for the following abnormalities.

* Drive gear, idle gear and driven gear damage or wear
* Improper tooth contact
* Shaft spline damage

CRANKCASE

BEARING INSPECTION

Rotate the bearing inner race by finger to inspect for abnormal play, noise and smooth rotation while the bearings are in the crankcase.

Replace the bearing in the following procedure if there is anything unusual.

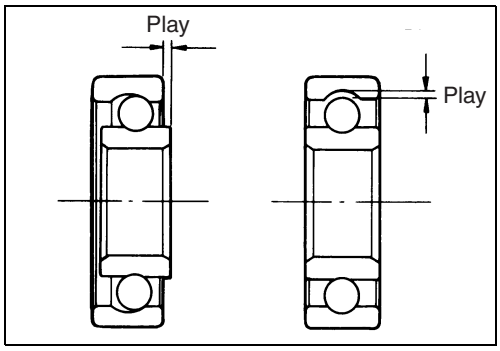

BEARING/OIL SEAL REMOVAL (LEFT CRANKCASE)

• Remove the oil seal ①.

CAUTION

The removed oil seal should be replaced with a new one.

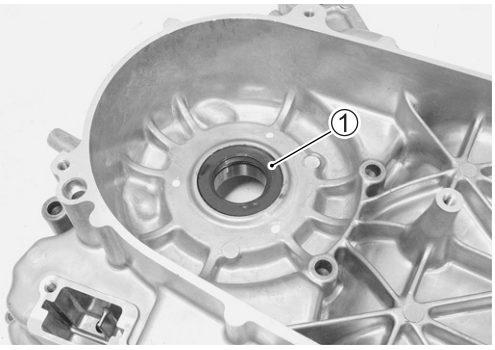

• Remove the bearing ② using the special tool.

TOOL 09913-70210: Bearing installer set (42 × 47 mm)

NOTE:

If abnormal noise does not occur, it is not necessary to remove the bearing.

CAUTION

The removed bearing should be replaced with a new one.

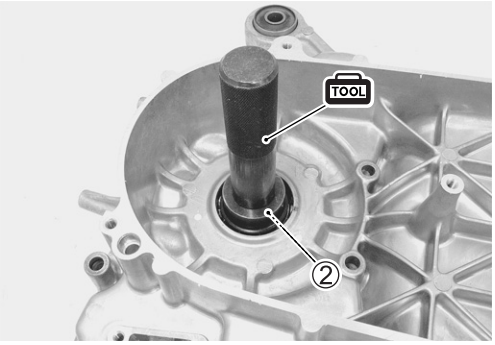

- Remove the oil seal ③.

TOOL 09913-50121: Oil seal remover

CAUTION

The removed oil seal should be replaced with a new one.

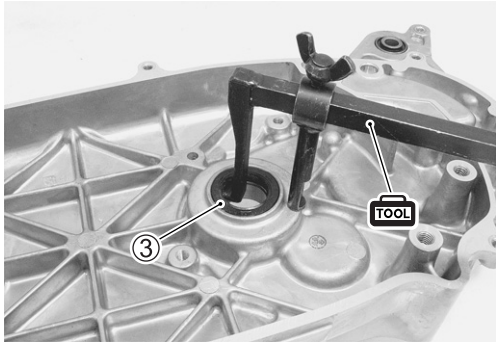

- Remove the bearings (④, ⑤, ⑥) using the special tools.

TOOL 09913-70210: Bearing installer set (35 mm)
09921-20240: Bearing remover set (15 mm)
09921-20240: Bearing remover set (17 mm)

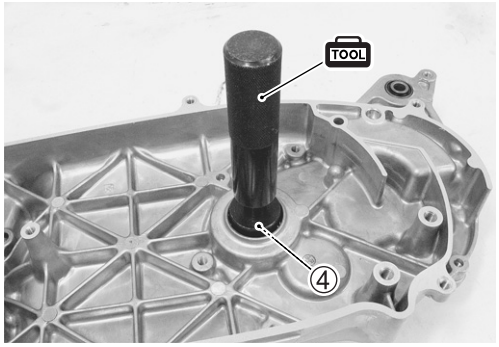

NOTE:
If abnormal noise does not occur, it is not necessary to remove the bearing.

CAUTION

The removed bearings should be replaced with new ones.

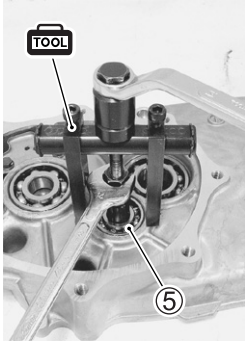

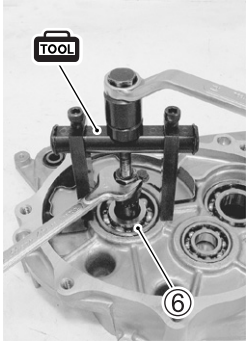

- Remove the plate ⑦.

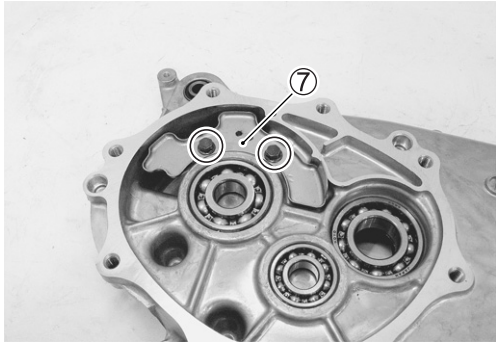

BEARING/OIL SEAL INSTALLATION (LEFT CRANKCASE)

- Install the bearing ① using the special tool.

TOOL 09913-70210: Bearing installer set (72 × 75 mm)

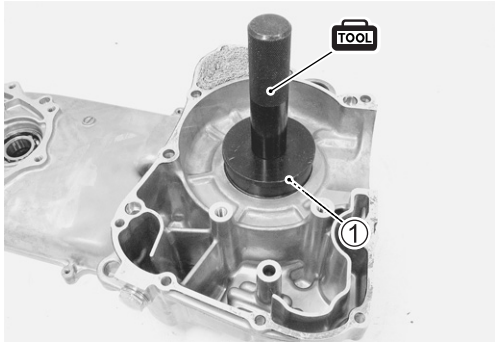

- Install new oil seal ② using the special tool.

TOOL 09913-70210: Bearing installer set (72 × 75 mm)

- Apply grease to the lip of oil seal.

A 99000-25010: SUZUKI SUPER GREASE "A" or equivalent

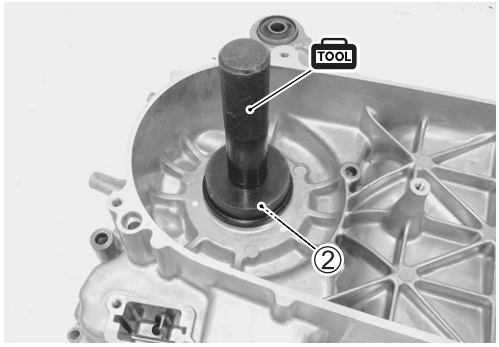

- Install the bearing ③ using the special tool.

TOOL 09913-70210: Bearing installer set

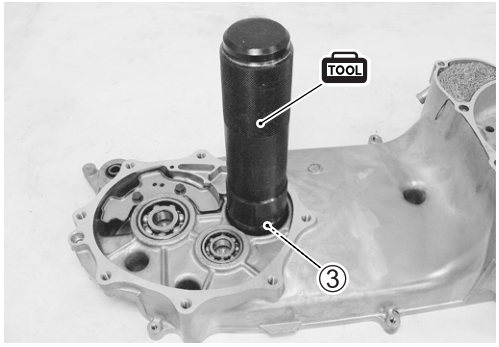

- Install the oil seal ④ using the special tool.

TOOL 09913-70210: Bearing installer set

- Apply grease to the lip of oil seal.

A 99000-25010: SUZUKI SUPER GREASE "A" or equivalent

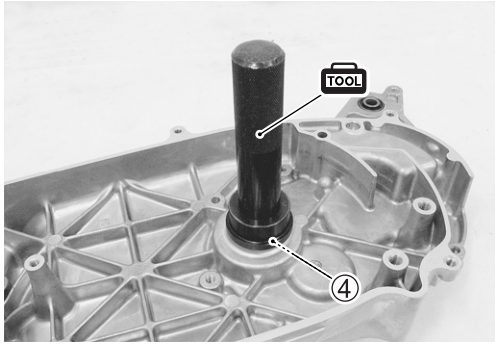

- Install the bearings (⑤, ⑥) using the special tool.

TOOL 09913-70210: Bearing installer set

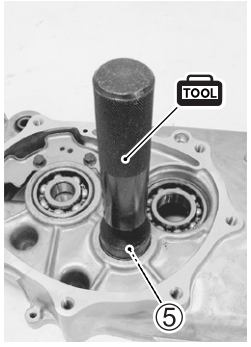

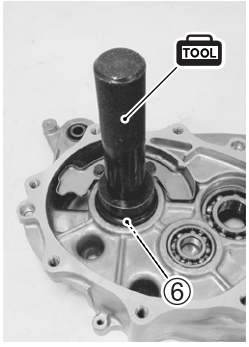

- Apply THREAD LOCK SUPER to the bolts.
- Install the plate ⑦.

1322 99000-32110: THREAD LOCK SUPER "1322" or equivalent

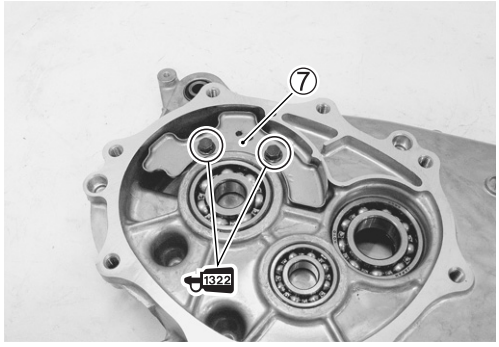

BEARING REMOVAL (RIGHT CRANKCASE)

- Remove the bearing using the special tool.

TOOL 09913-70210: Bearing installer set (42 × 47 mm)

NOTE:
If abnormal noise does not occur, it is not necessary to remove the bearing.

CAUTION

The removed bearing should be replaced with a new one.

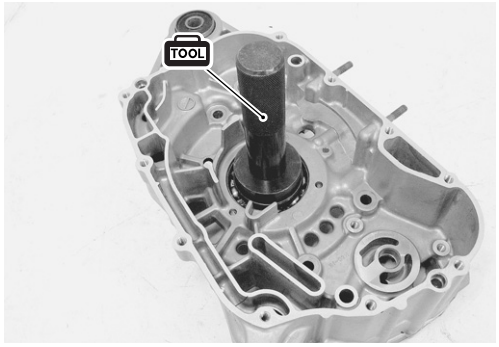

BEARING INSTALLATION (RIGHT CRANKCASE)

- Install the bearing using the special tool.

TOOL 09913-70210: Bearing installer set (72 × 75 mm)

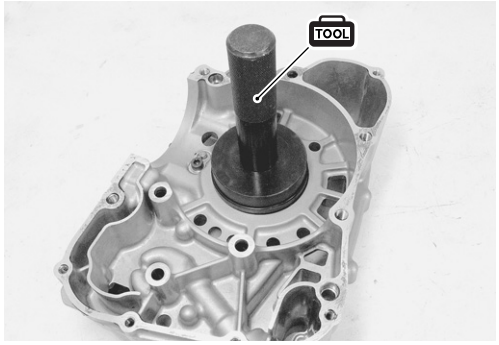

OIL NOZZLE REMOVAL

- Remove the oil nozzle ① by removing the bolt.
- Remove the O-ring ②.

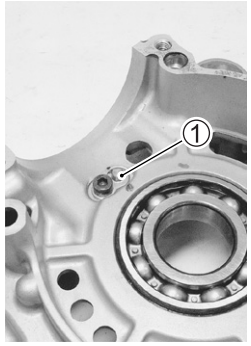

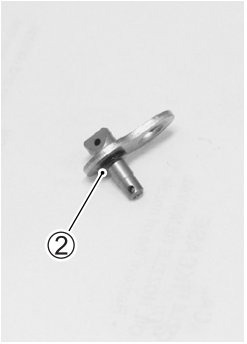

OIL NOZZLE INSTALLATION

- Fit new O-ring to the oil nozzle.
- Apply THREAD LOCK to the bolt, tighten it securely.

1342 99000-32050: THREAD LOCK "1342" or equivalent

NOTE:
Before installing the oil nozzle, clean its oil passage.

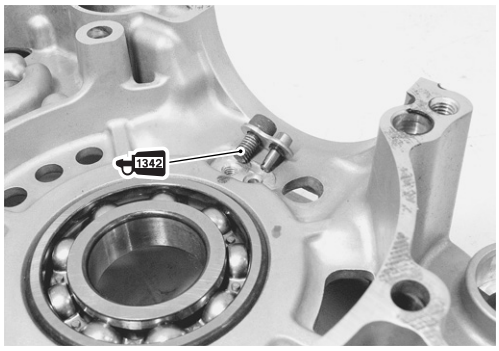

BUSHING INSPECTION

Inspect the engine mounting bushings ①, ② and rear suspension bushing ③ for wear or damage.
If any defects are found, replace the bushing with a new one.

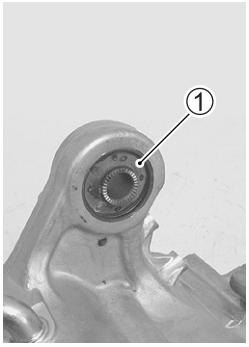

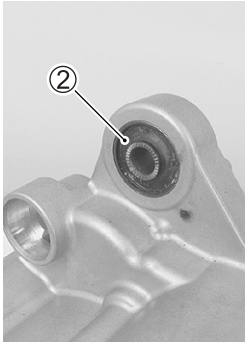

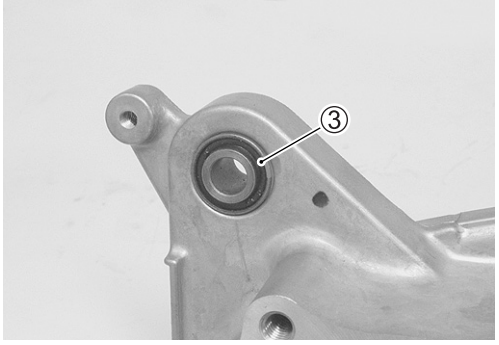

ENGINE MOUNTING BUSHING REMOVAL

- Using appropriate side steel tubes ① and vise, remove the bushing ② from the crankcase ③.

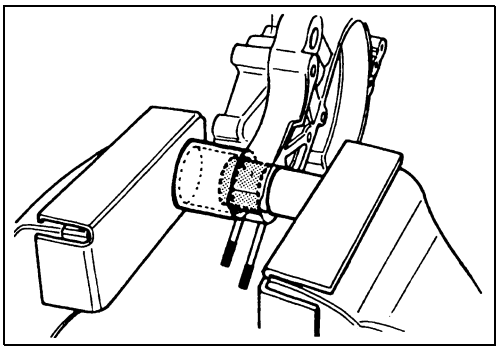

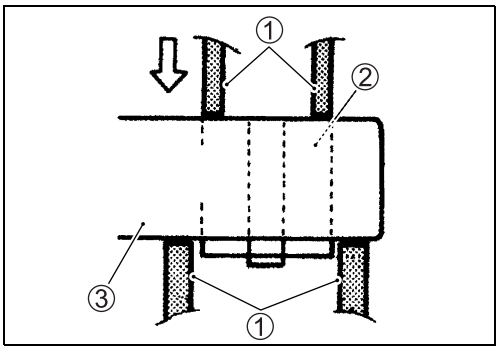

ENGINE MOUNTING BUSHING INSTALLATION

- Using an appropriate side steel tube and vise, press in the bushing ① into the crankcase ②.

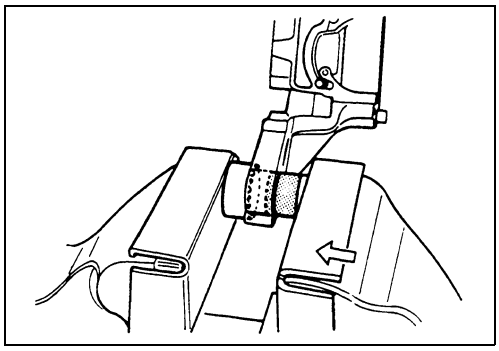

CAUTION

*** Knurling side of the bushings must face inside.**
*** Align the bushing end Ⓐ with the crankcase surface.**

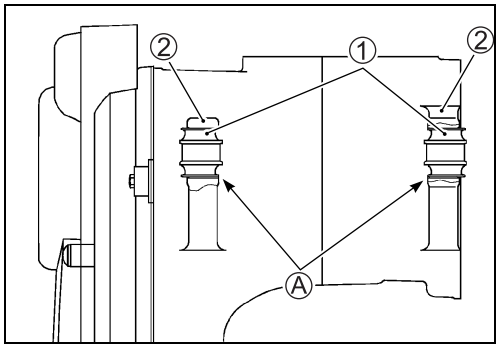

REAR SHOCK ABSORBER BUSHING

Remove and install the rear shock absorber bushing in the same manner of engine mounting bushing removal and installation. Pay attention to the following point:

- Press in the rear shock absorber bushing ① to the correct position as shown.

Ⓐ 97 mm
Ⓑ Crankcase mating surface

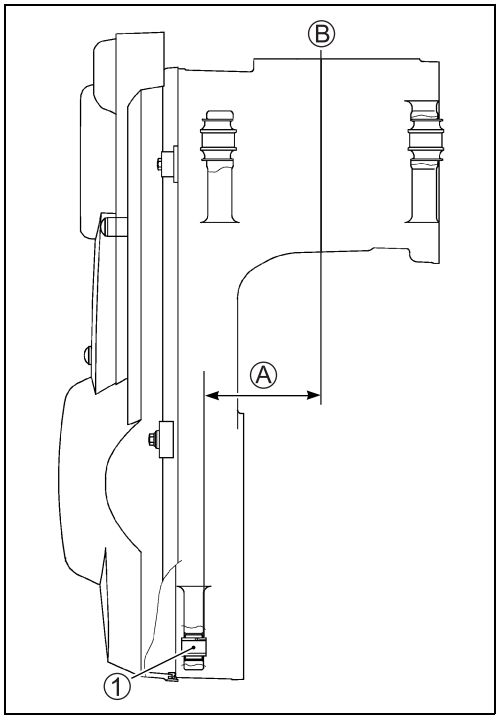

ENGINE REASSEMBLY

Reassembly is in the reverse order of removal. Pay attention to the following points:

CAUTION

*** Make sure to coat the rotating and sliding sections with engine oil.**
*** Care must be taken so that the drive V-belt, drive face and driven face are completely free from oil and grease.**

CRANKSHAFT

- Using the special tools, install the crankshaft into the left crankcase.

NOTE:
When installing in the crankshaft into the crankcase, insert the attachments Ⓐ (ϕ35 mm) and Ⓑ (ϕ30 mm) of the bearing installer set between the crankcase bearing inner lace and crankshaft installer.

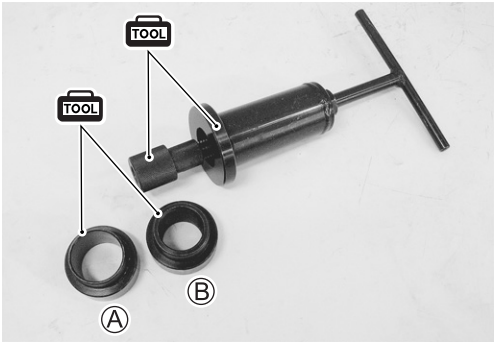

TOOL 09910-32812: Crankshaft installer
09910-32840: Attachment
09913-70210: Bearing installer set (30 mm, 35 mm)

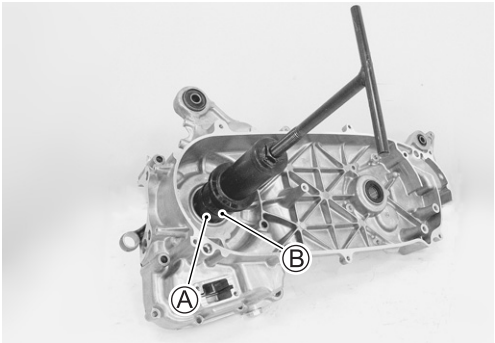

CAUTION

*** Do not hit the crankshaft with a plastic mallet or the like to install it into the crankcase.**
*** Make sure that the direction of conrod is turned toward the cylinder hole.**

- Using the special tool, press in the oil seal ① to the position Ⓐ where is 1 mm deeper from the crankcase edge.

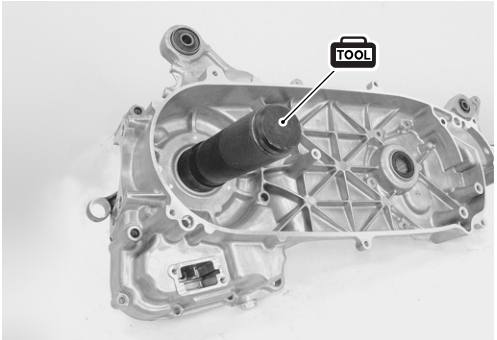

TOOL 09913-70210: Bearing installer set

CAUTION

Use new oil seal.

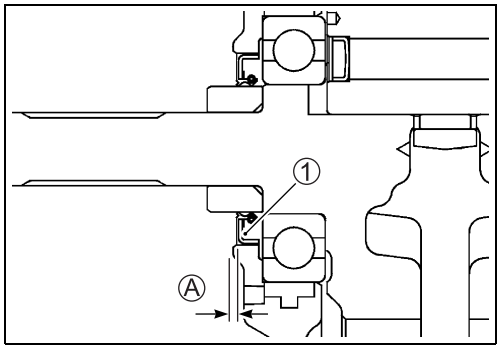

Ⓐ: 1 mm

CRANKCASE

- Clean and degrease the crankcase mating surfaces (both surfaces).
- Fit the dowel pins ① into the left crankcase.
- Apply SUZUKI BOND to the both crankcases.

1215 99000-31110: SUZUKI BOND "1215" or equivalent

CAUTION

*** Coat the sealant evenly without break.**
*** Application of sealant must be performed within a short period of time.**
*** Take extreme care not to let sealant enter into the oil hole or bearing.**

- Assemble the crankcases with in few minutes.

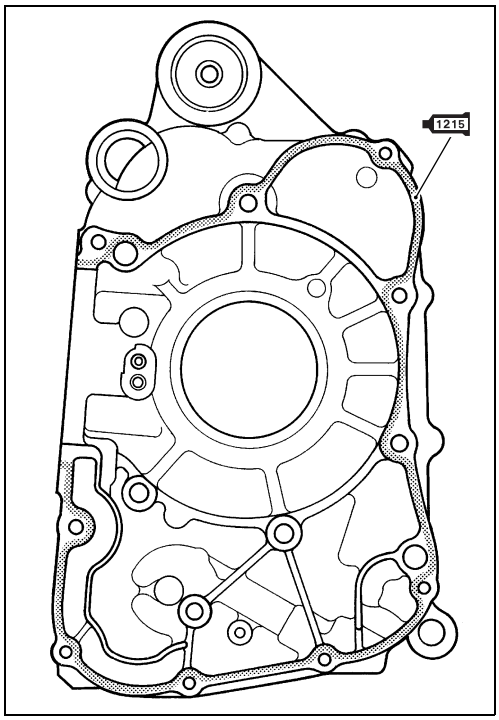

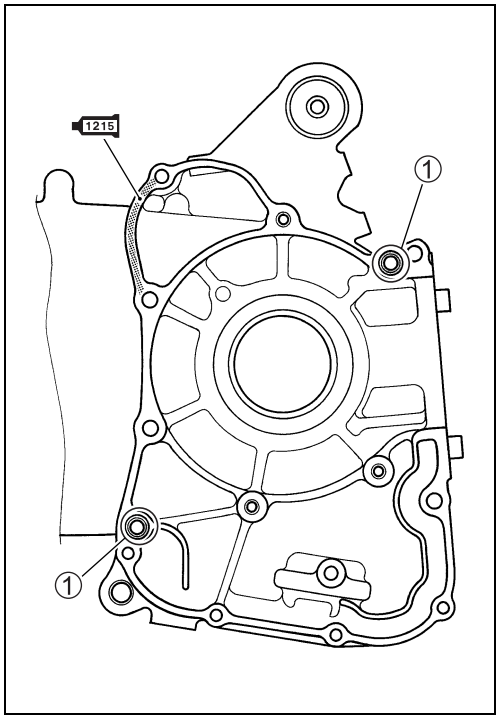

- Fit the radiator hose guide ②.
- Tighten the 8 mm crankcase bolts first, then 6 mm ones evenly and diagonally.

Crankcase bolt 8 mm: 22 N·m (2.2 kgf-m)
Crankcase bolt 6 mm: 11 N·m (1.1 kgf-m)

NOTE:
After crankcase bolts have been tightened, make sure that the crankshaft rotates smoothly.

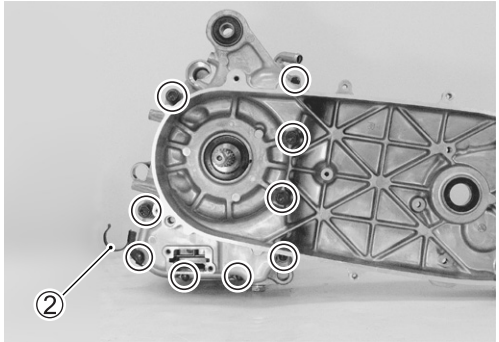

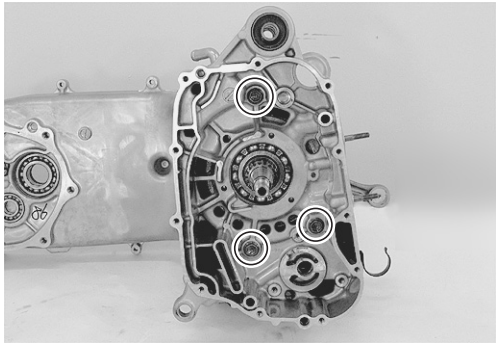

OIL SUMP FILTER
- Install the oil sump filter ①, gasket ② and cap ③.

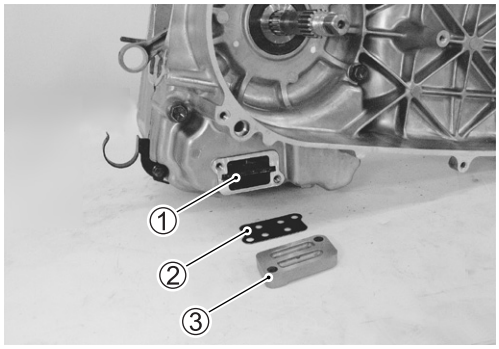

CAUTION

*** The lip Ⓐ of the oil sump filter should be positioned downward.**
*** The shorter side Ⓑ of the oil sump filter should be positioned inside.**
*** Replace the gasket with a new one.**

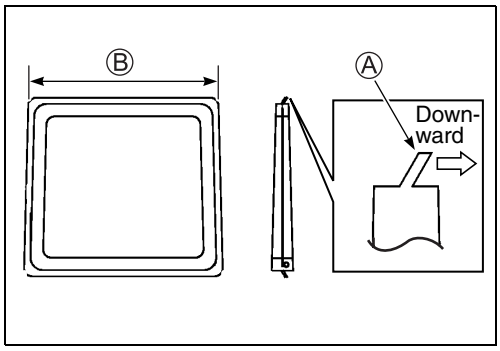

FINAL GEAR
- Install the driveshaft ① by tapping it with a plastic mallet.
- Install the final driven gear/rear axle shaft ②.

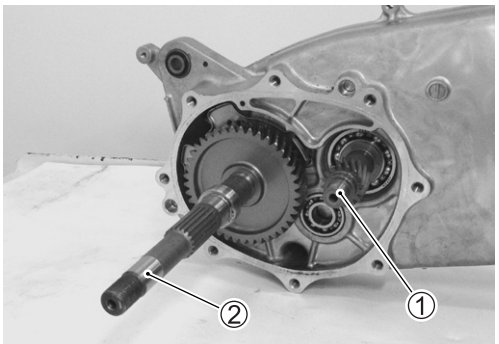

IDLE SHAFT SHIM SELECTION

In order to obtain proper clearance for the idle shaft, 7 kinds of shims in different thickness are available.

Inspect the clearance as follows and replace the shim if necessary.

- Degreace the idle shaft and shim ①.
- Fit the idle shaft shim ① on the bearing.
- Place the plastigauge onto the idle shaft shim as shown.

TOOL 09900-22301: Plastigauge
09900-22302: Plastigauge

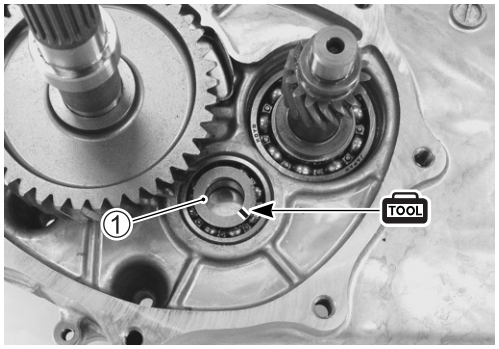

- Install the idle gear ②.

CAUTION

Never rotate the shafts when a piece of plastigauge is installed.

- Install the dowel pins.

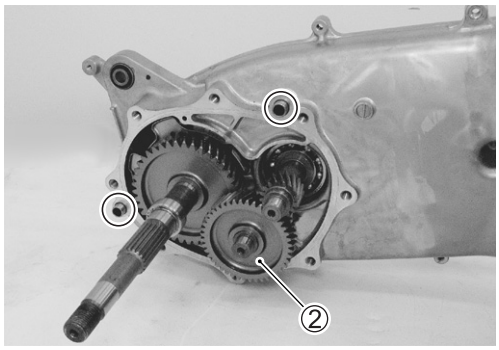

- Install the final gear box cover ③.
- Tighten the final gear box cover bolts in the ascending order of numbers to the specified torque.

Final gear box cover bolt: 22 N·m (2.2 kgf-m)

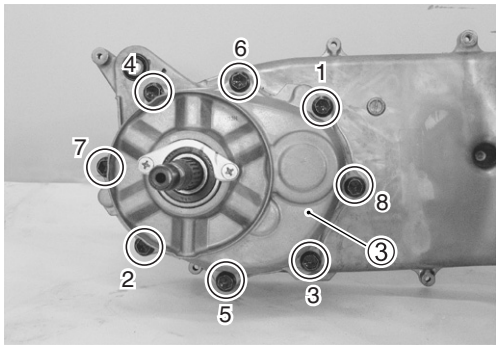

- Remove the final gear box cover and measure the width of compressed plastigauge using the envelope scale. This measurement should be taken at the widest part of compressed plastigauge.

DATA Idle shaft clearance: 0.03 – 0.17 mm

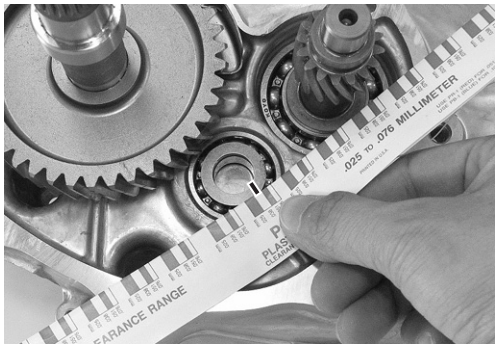

- If the measured clearance is not within the specification, measure the thickness of the shim ① with the micrometer and select the specified shim from the table below.

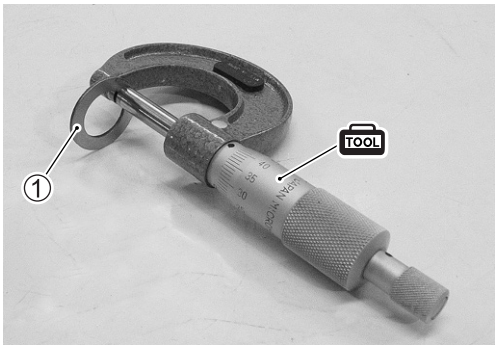

TOOL 09900-20205: Micrometer (0 – 25 mm)

DATA Idle shaft shim selection table

PART NO.	SHIM THICKNESS
09181 – 15164	0.90 mm
09181 – 15166	1.00 mm
09181 – 15172	1.10 mm
09181 – 15176	1.20 mm
09181 – 15181	1.30 mm
09181 – 15182	1.40 mm
09181 – 15183	1.50 mm

After installing the correct shim, assemble the final gear box in the same way.

- Replace the O-ring ④ with a new one.

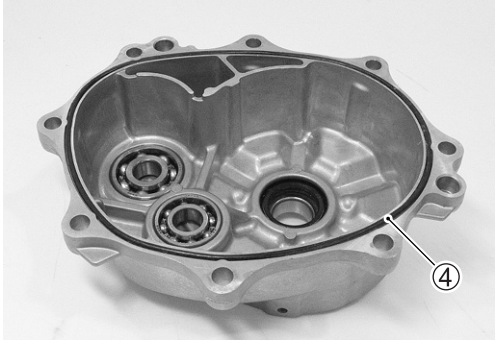

CAUTION

Apply engine oil to each gear and shaft.

- Install the final gear box cover and tighten the bolts in the ascending order of numbers to the specified torque.

Final gear box cover bolt: 22 N·m (2.2 kgf-m)

- Fill specified amount of final gear box oil.

DATA Final gear box oilcapacity
Overhaul: 160 ml

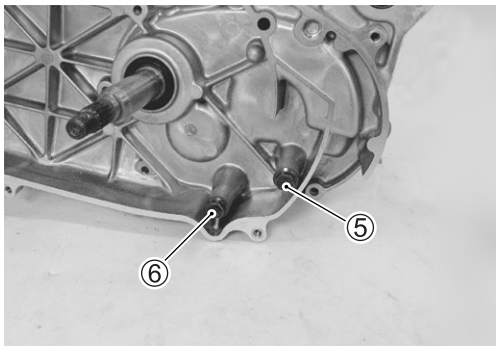

Oil level plug ⑤: 12 N·m (1.2 kgf-m)
Oil drain plug ⑥: 12 N·m (1.2 kgf-m)

DRIVE TRAIN

- With compressing the movable driven face ① towards the clutch shoe by hands, install the drive V-belt ② between the movable and fixed driven faces.

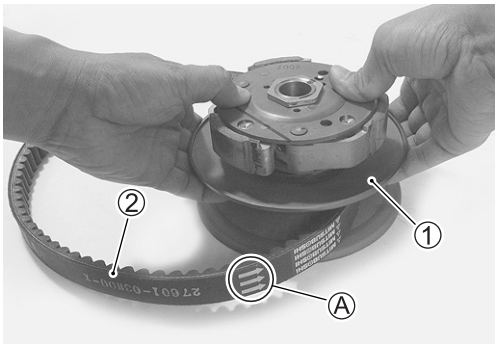

CAUTION

*** Position the drive V-belt so that the arrows Ⓐ point the engine rotating direction.**
*** Degrease the drive V-belt contacting surfaces.**

- Check that no roller inside the movable drive face is out of the slot.
- Install the movable drive face ③.

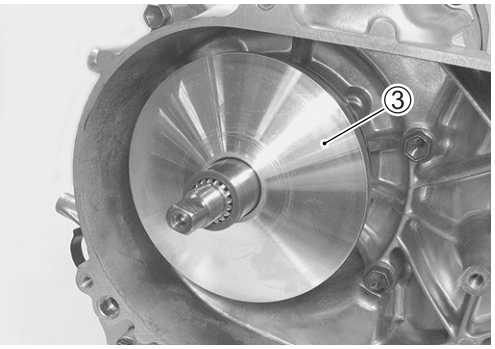

CAUTION

> *** The assembly work should be carefully performed so as not to allow the roller to dislocate.**
> *** Check that the movable drive face is properly engaged with the spline.**

- Install the movable driven face assembly.
- Hook the drive V-belt onto the spacer ④.

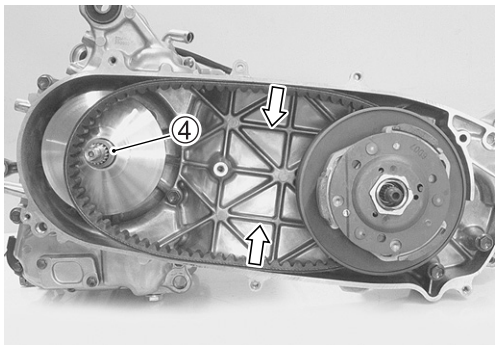

CAUTION

> **Pull the center area of upper and lower belt lines to be close to each other to prevent the belt from expanding.**

- Install the clutch housing ⑤.

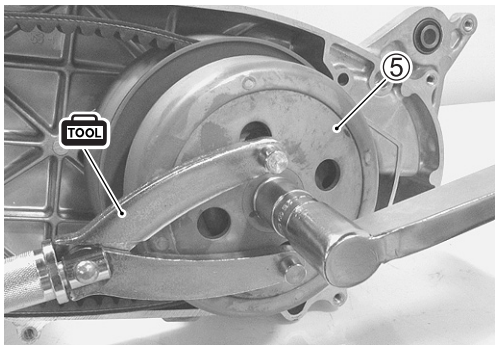

CAUTION

> **Degrease the inner surface of the clutch housing before installing.**

- With the clutch housing held immovable using the special tool, tighten the nut to the specified torque.

TOOL 09930-40113: Rotor holder

Clutch housing nut: 75 N·m (7.5 kgf-m)

- Install the fixed drive face ⑥.
- Install the washer ⑦ with its convex side facing outside.

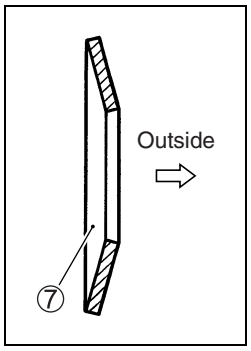

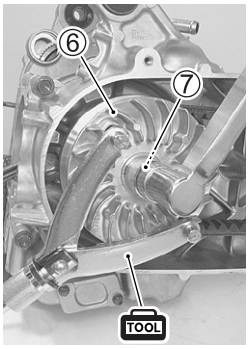

CAUTION

> *** Degrease the drive V-belt contacting surfaces.**
> *** Check that the fixed drive face is properly engaged with the spline.**

- With the fixed drive face held immovable using the special tool, tighten the nut to the specified torque.

TOOL 09930-40113: Rotor holder

Fixed drive face nut: 95 N·m (9.5 kgf-m)

- To obtain proper contact of the drive V-belt, turn the fixed drive face until the fixed drive face and the movable driven face can rotate synchronously.

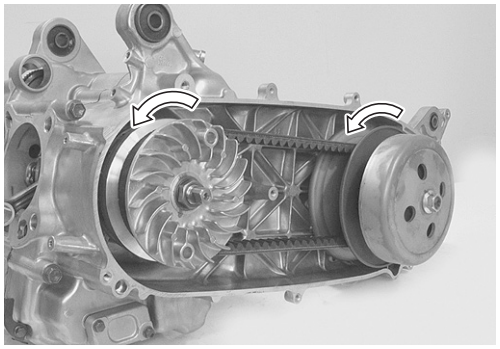

- Fit a new clutch cover gasket.
- Install the clutch cover ⑧.

CAUTION

Bolts must be tightened diagonally and evenly.

- Tighten the clutch cover bolts to the specified torque.

Clutch cover bolt: 8 N·m (0.8 kgf-m)

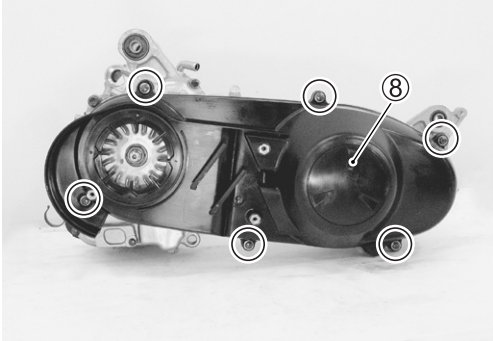

CRANKSHAFT RIGHT BEARING NUT

- Lock the crankshaft by inserting a steel rod into the crankcase hole Ⓐ through the crank web holes.
- Install the shim ① and crankshaft right bearing nut ②.
- Using the special tool, tighten the crankshaft right bearing nut ② to the specified toque.

09922-21410: Long socket (46 mm)

Crankshaft right bearing nut: 147 N·m (14.7 kgf-m)

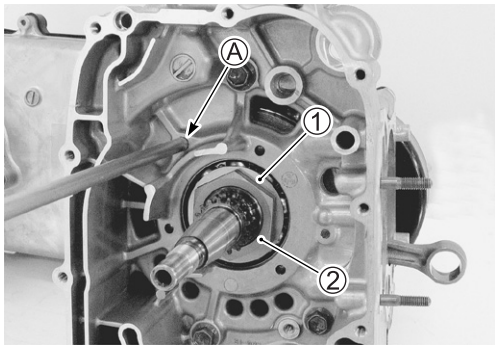

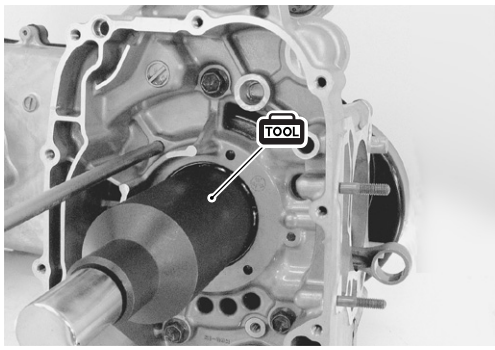

CAM CHAIN

- Install the cam chain ①.

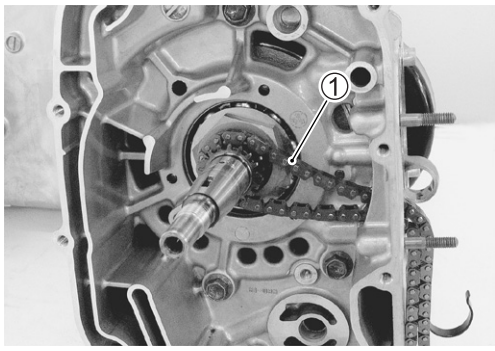

OIL PUMP

- Engage the oil pump drive chain ① with the oil pump gear.

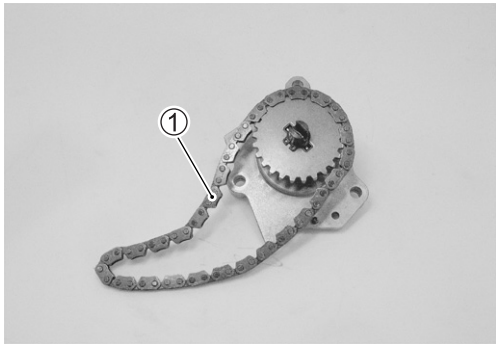

- Install the oil pump and cover.

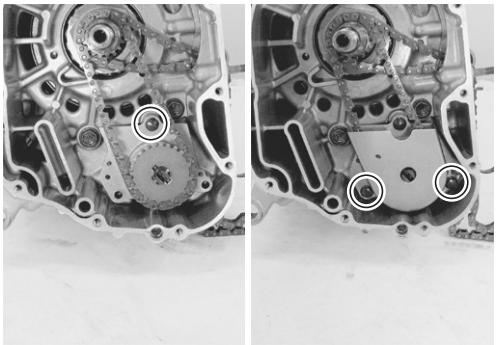

GENERATOR ROTOR AND STARTER DRIVEN GEAR

- Install the key ①.

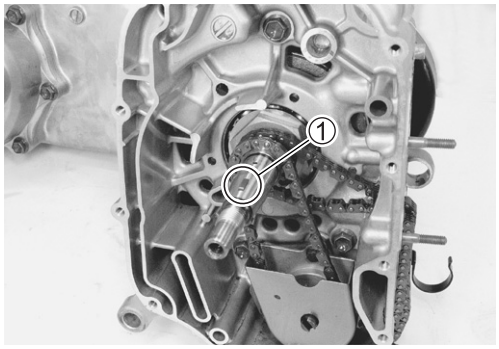

- Install the generator rotor ② together with the starter driven gear ③.

NOTE:
Make sure that the starter clutch is engaged with the starter driven gear.

- With the generator rotor held immovable with the special tool, tighten the generator rotor nut to the specified torque.

Generator rotor nut: 95 N·m (9.5 kgf-m)

09930-44520: Rotor holder

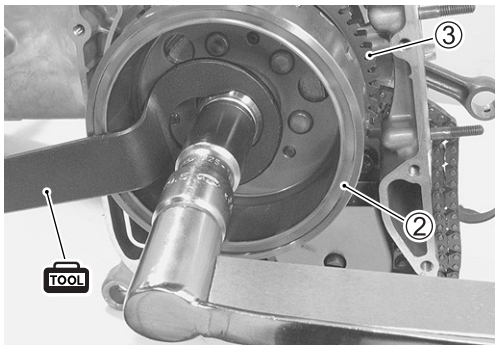

STARTER IDLE GEAR

- Install the starter idle gear ① and starter idle gear shaft ②.

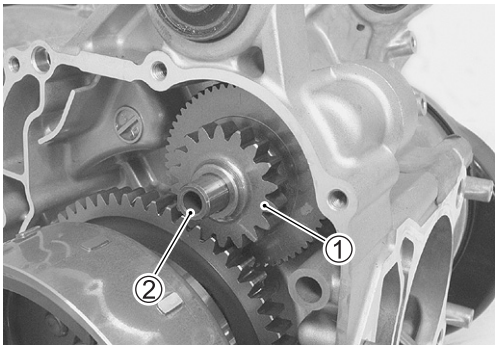

GENERATOR COVER

- Install the dowel pins and gasket ①.

CAUTION

Use the new gasket to prevent engine oil leakage.

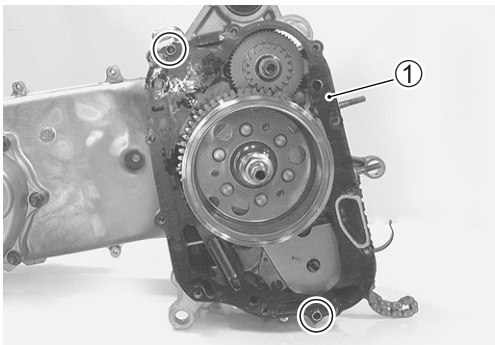

- Install the generator cover ②.

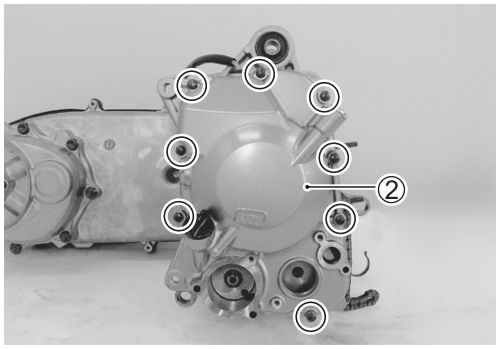

WATER PUMP

- Install the O-rings ①, ② to the water pump.

CAUTION

Use the new O-rings to prevent engine coolant leakage.

- Apply engine coolant to the O-ring ①.
- Apply grease to the O-ring ②.

99000-25010: SUZUKI SUPER GREASE "A" or equivalent

- Install the water pump assembly ③.

CAUTION

Align the boss Ⓐ of the water pump shaft end with the slot Ⓑ of the oil pump shaft.

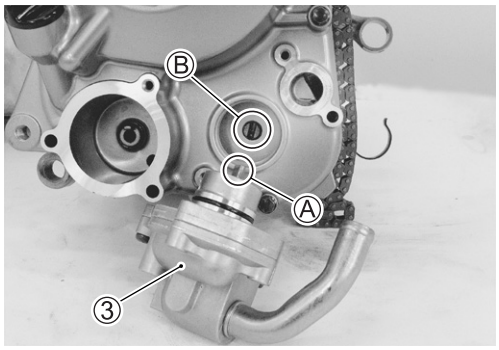

- Fit the clamp Ⓒ in position.
- Tighten the water pump bolts.

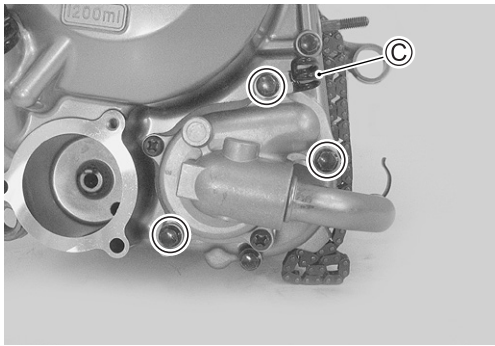

OIL FILTER

- Install the O-ring ①.
- Install the oil filter ②.
- Install the O-ring ③ and spring ④.

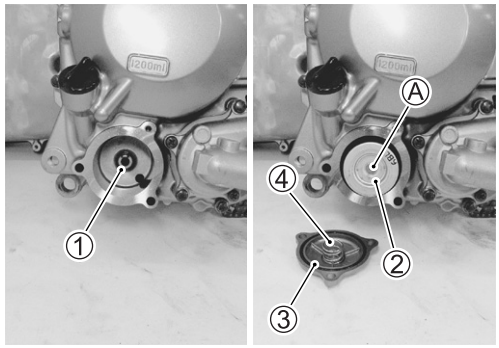

CAUTION

> *** Use new O-rings to prevent the engine oil leakage.**
> *** Position the oil filter so that the valve Ⓐ faces outside.**

- Install the oil filter cap ⑤.

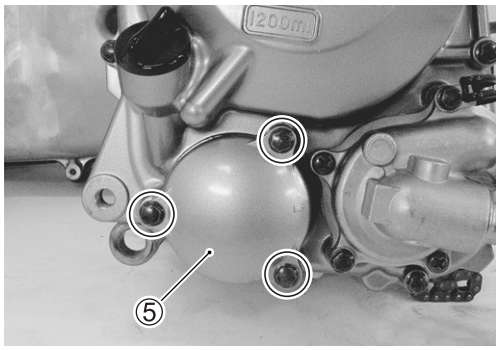

PISTON RING

- Install the piston rings in the order of oil ring, 2nd ring and 1st ring.
- To install the oil ring, fit the spacer ① first and then the side rails ②.

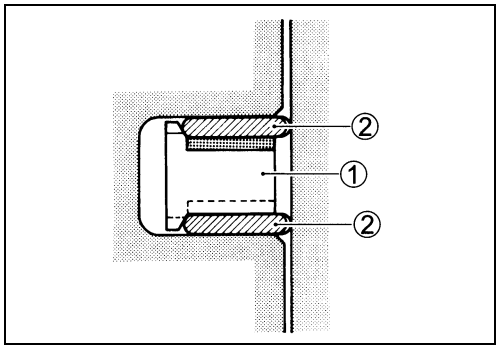

CAUTION

> *** When installing the spacer, be careful so that the both edges are not overlapped.**
> *** When installing the piston rings, be careful not to damage the piston.**
> *** Do not expand the piston ring excessively since it is apt to be broken down.**

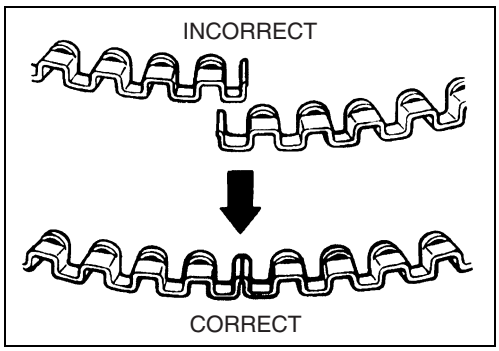

- Install the 2nd ring ③ and 1st ring ④.

NOTE:
2nd ring ③ and 1st ring ④ differ in shape.

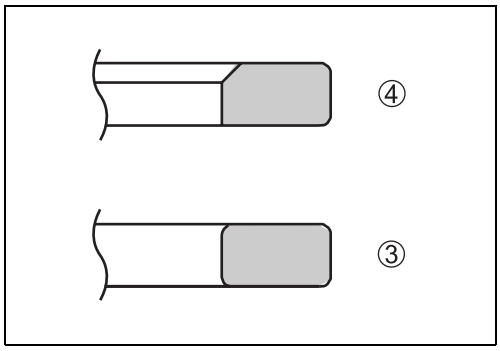

- Face the stamped mark Ⓐ upward when assembling.

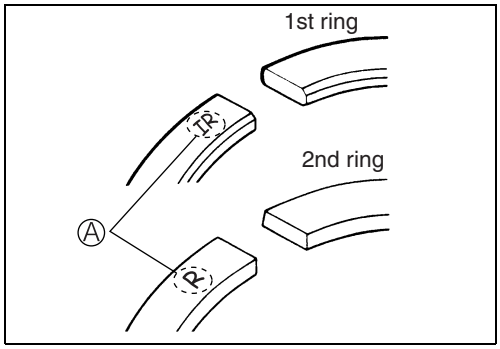

- After installing all the piston rings, check that each ring rotates smoothly.
- To prevent poor compression or oil leaking up to the cylinder inside, position each ring end gap as shown in the right figure.
  Ⓐ Second ring/side rail (lower side)
  Ⓑ Side rail (upper side)
  Ⓒ Top ring/spacer

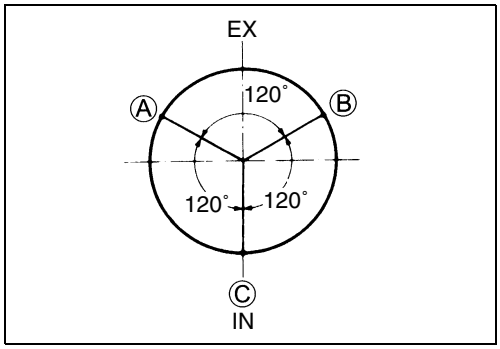

PISTON

- Before installing the piston pin, apply molybdenum oil to its surface.

MOLYBDENUM OIL SOLUTION

- When installing the piston, face the concave mark Ⓐ on its head to the exhaust side.
- Place a clean rag over the cylinder base so as not to drop the piston pin circlips into the crankcase.
- Install the piston pin circlips.

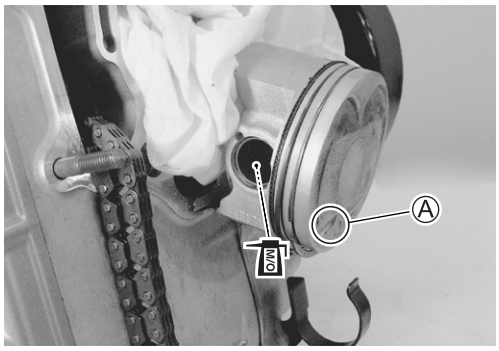

CAUTION

Use new piston pin circlips.

CYLINDER

- Install the dowel pins and a new gasket ① to the crankcase.

CAUTION

Replace the gasket with a new one.

- Coat the cylinder wall and piston surface with engine oil.

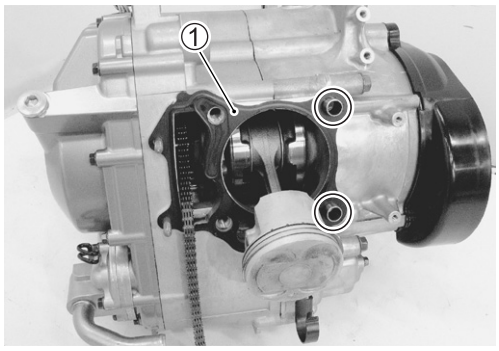

- Install the cylinder.

CAUTION

When inserting the piston into the cylinder, take care not to bend the piston ring.

- Temporary tighten the cylinder nuts ②.

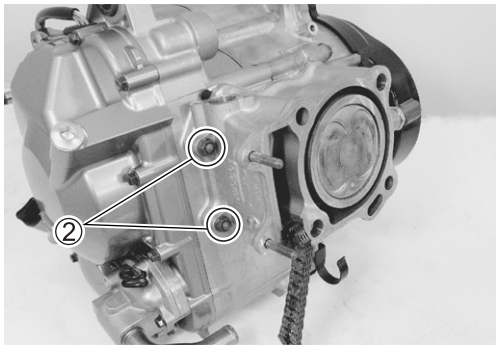

CAM CHAIN GUIDE

- Install the cam chain guide ①.

CAUTION

When installing the cam chain guide, check that the chain is properly engaged with the crankshaft sprocket.

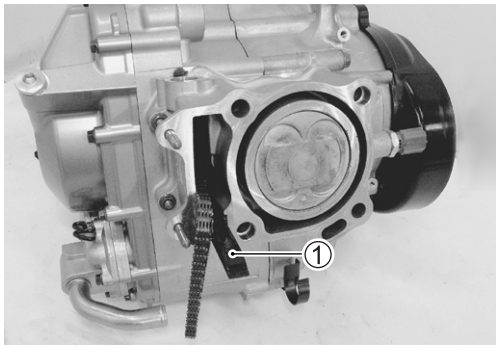

CYLINDER HEAD

- Place the dowel pins and cylinder head gasket ① on the cylinder.

CAUTION

Replace the gasket with a new one.

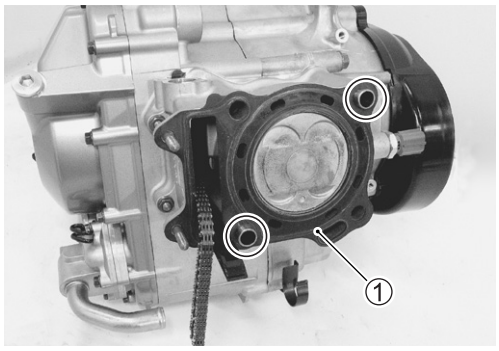

- Install the cylinder head.
- Tighten the cylinder head bolts diagonally and evenly.
- Tighten the cylinder head bolts in two steps.

Cylinder head bolt
Initial: 25 N·m (2.5 kgf-m)
Final: 42 N·m (4.2 kgf-m)

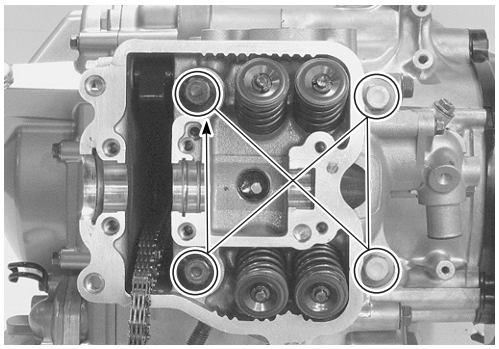

NOTE:
** The rounded side of the washer ② should be positioned upside.*
** Apply engine oil to the washers ② and thread of the bolts before installing them.*

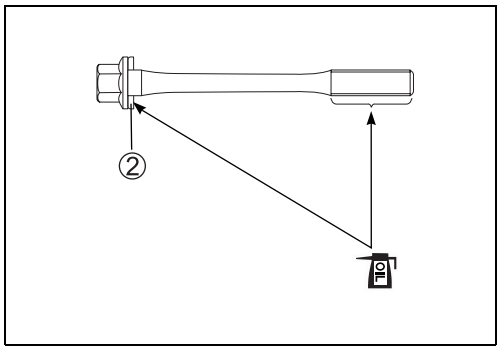

- Tighten the cylinder base nuts and cylinder head nuts to the specified torque.

Cylinder base nut: 10 N·m (1.0 kgf-m)
Cylinder head nut: 10 N·m (1.0 kgf-m)

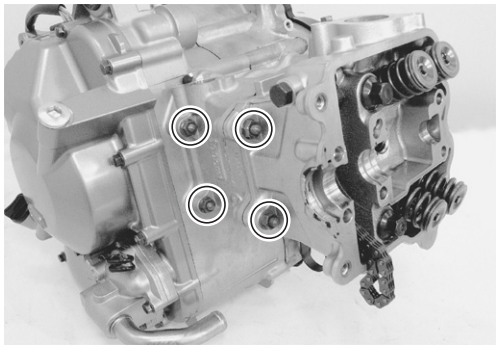

CAMSHAFT

- Turn the crankshaft to align the "TDC" line Ⓐ on the generator rotor with the index mark Ⓑ on the generator cover while keeping the cam chain pulled upward.

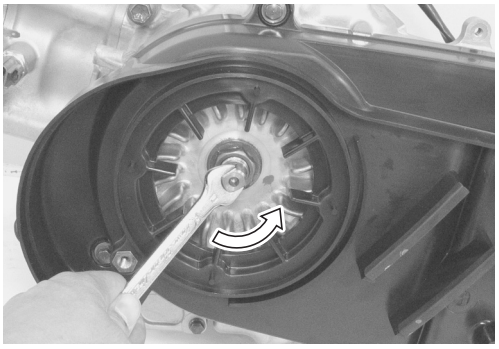

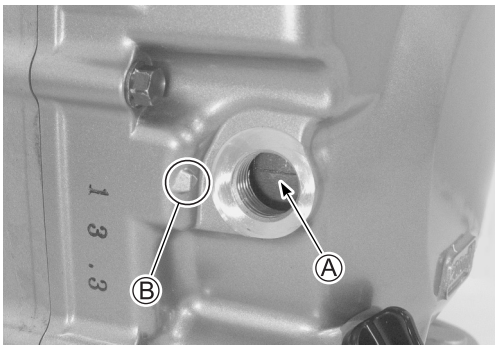

- Install the C-ring ①.

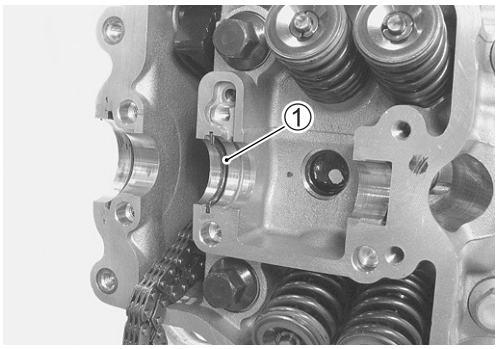

- Install the camshaft ② and camshaft sprocket ③.

CAUTION

Position the camshaft sprocket so that the stamped mark side faces outside.

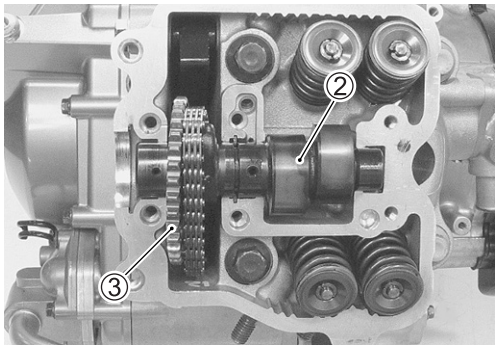

- Align the engraved lines Ⓒ on the camshaft end with the cylinder head top surface.
- Position the camshaft sprocket so that the locating pin hole Ⓓ aligns with the locating pin on the camshaft.
- Engage the cam chain with the camshaft sprocket.

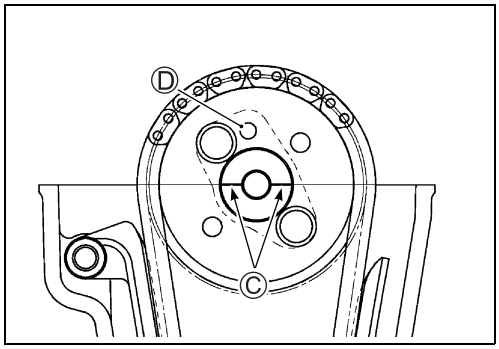

- Apply THREAD LOCK SUPER to the camshaft sprocket bolts.
- Tighten the camshaft sprocket bolts to the specified torque.

1303 99000-32030: THREAD LOCK SUPER "1303" or equivalent

Camshaft sprocket bolt: 15 N·m (1.5 kgf-m)

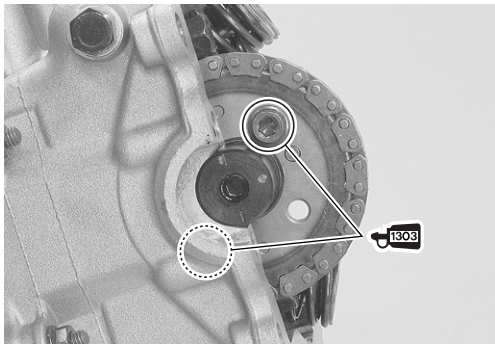

- Install the dowel pins.
- Apply engine oil to the cam faces and journals.

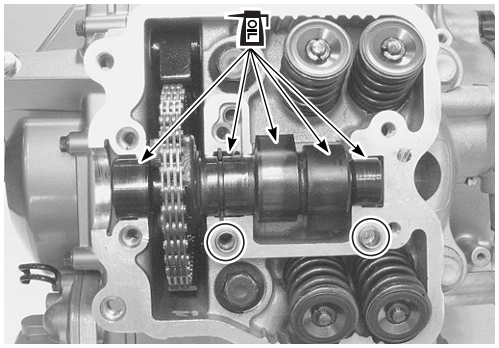

- Install the camshaft holder No.1 ④ and tighten the bolts to the specified torque.

Camshaft holder bolt: 10 N·m (1.0 kgf-m)

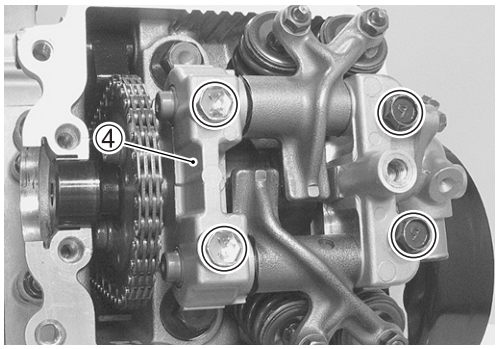

- Install the dowel pins.
- Install the camshaft holder No.2 ⑤ and tighten the bolts to the specified torque.

Camshaft holder bolt: 10 N·m (1.0 kgf-m)

CAUTION

When installing the camshaft holder No.2, the protruded side must be face outside.

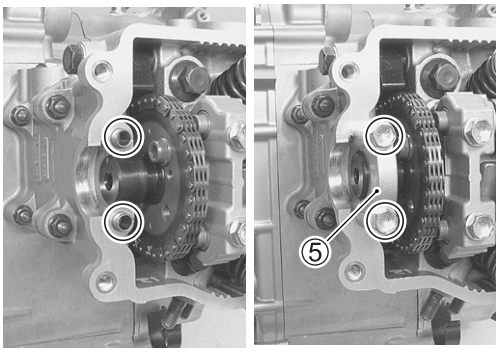

CAM CHAIN TENSION ADJUSTER

- With the spring holder bolt and spring removed, release locking of the ratchet mechanism ① and push the push rod ② all the way in.

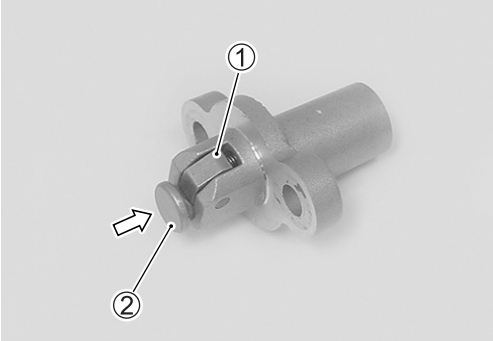

- Fit a new gasket ③ and O-ring ④.

CAUTION

Replace the gasket and O-ring with a new one.

- Install the cam chain tension adjuster with “UP” mark faced to the top of cylinder head.

Cam chain tension adjuster bolt: 10 N·m (1.0 kgf-m)

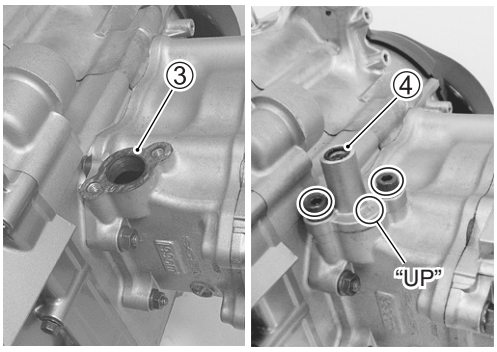

- Install the spring ⑤ and spring holder bolt ⑥.
- Tighten the spring holder bolts to the specified torque.

Spring holder bolt: 8 N·m (0.8 kgf-m)

CAUTION

*** When the cam chain tension adjuster has been installed, check for cam chain tension to determine if the tension adjuster is functioning properly.**
*** Turn the crankshaft and check that all the moving parts (e.g., camshaft and the rocker arm) work properly.**

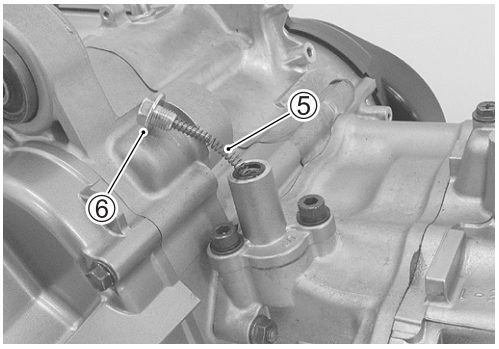

- Inspect the valve clearance. (☞2-6)

CYLINDER HEAD COVER

- Install the gasket to the cylinder head cover.

CAUTION

Replace the gasket with a new one.

- Apply SUZUKI BOND to the points shown in the photo.

1207B 99000-31160: SUZUKI BOND "1207B" or equivalent

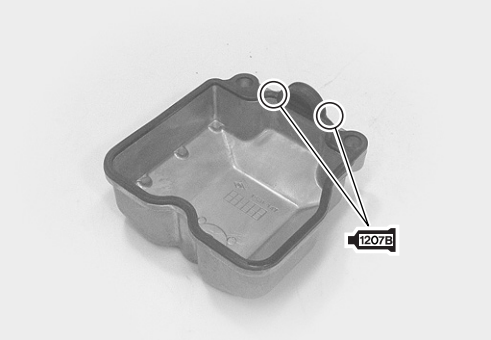

- Install the cylinder head cover.
- Apply engine oil to both sides of the washer ①.
- Tighten the cylinder head cover bolts in two steps.

Cylinder head cover bolt
Initial tightening: 10 N·m (1.0 kgf-m)
Final tightening : 14 N·m (1.4 kgf-m)

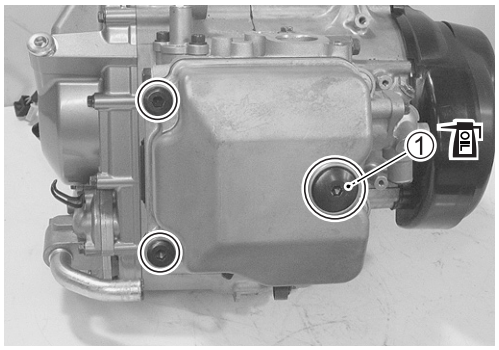

STARTER MOTOR

- Apply grease to the O-ring ①.

A H 99000-25010: SUZUKI SUPER GREASE "A" or equivalent

CAUTION

Replace the O-ring with a new one.

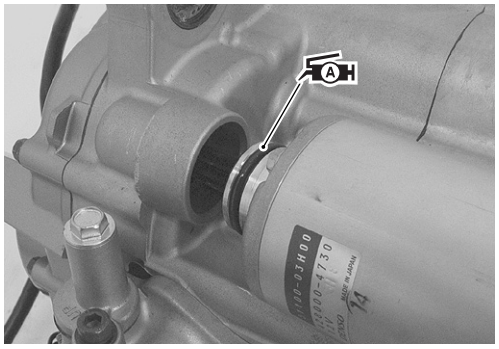

- Install the spark plug. (☞2-7)
- Install the crankcase bracket. (☞3-7)

FI SYSTEM DIAGNOSIS

CONTENTS

FI SYSTEM DIAGNOSIS

CONTENTS

PRECAUTIONS IN SERVICING

When handling the component parts or servicing the FI system, observe the following points for the safety of the system.

ELECTRICAL PARTS

CONNECTOR/COUPLER

- When connecting a connector, be sure to push it in until a click is felt.

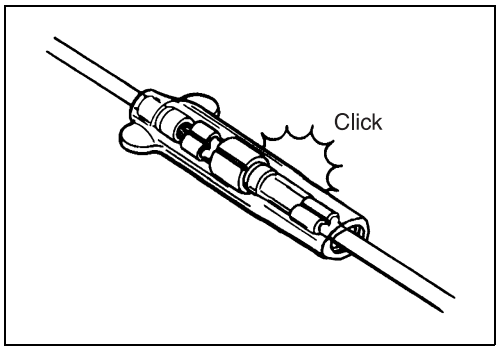

- With a lock type coupler, be sure to release the lock when disconnecting, and push in fully to engage the lock when connecting.
- When disconnecting the coupler, be sure to hold the coupler body and do not pull the lead wires.
- Inspect each terminal on the connector/coupler for looseness or bending.
- Inspect each terminal for corrosion and contamination.
  The terminals must be clean and free of any foreign material which could impede proper terminal contact.

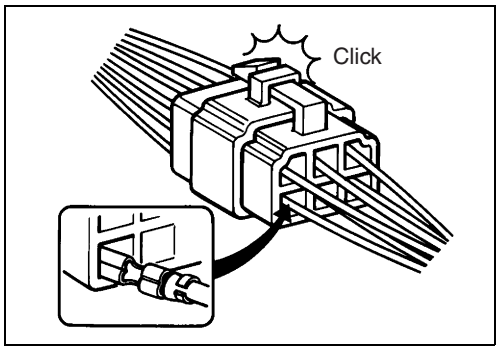

- Inspect each lead wire circuit for poor connection by shaking it by hand lightly. If any abnormal condition is found, repair or replace.

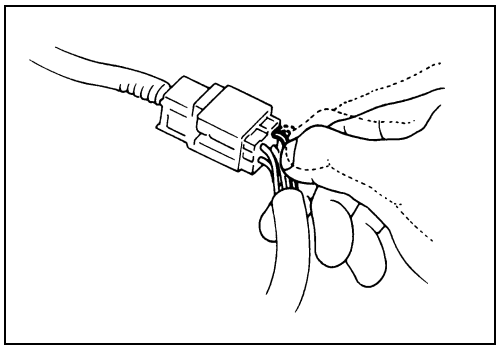

- When taking measurements at electrical connectors using a tester probe, be sure to insert the probe from the wire harness side (backside) of the connector/coupler.

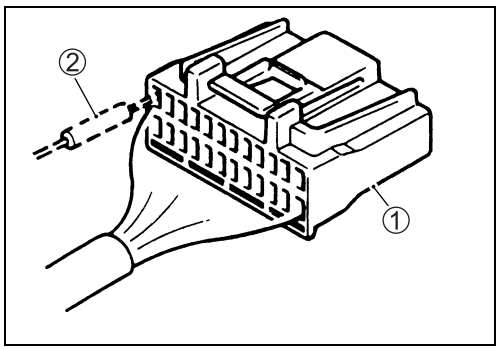

① Coupler
② Probe

- When connecting meter probe from the terminal side of the coupler (where connection from harness side not being possible), use extra care not to force and cause the male terminal to bend or the female terminal to open.
  Connect the probe as shown to avoid opening of female terminal.
  Never push in the probe where male terminal is supposed to fit.
- Check the male connector for bend and female connector for excessive opening. Also check the coupler for locking (looseness), corrosion, dust, etc.

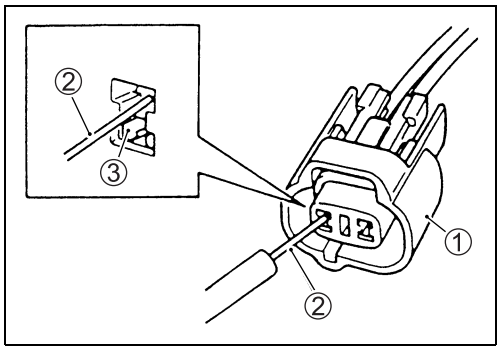

① Coupler
② Probe
③ Where male terminal fits

FUSE

- When a fuse blows, always investigate the cause to correct it and then replace the fuse.
- Do not use a fuse of a different capacity.
- Do not use wire or any other substitute for the fuse.

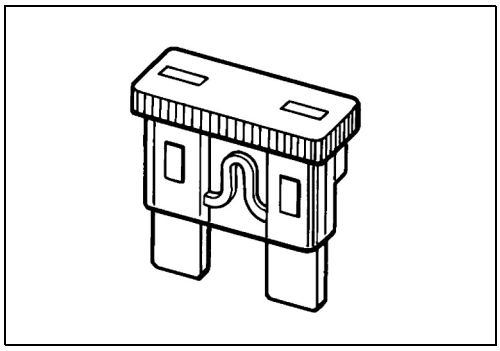

SWITCH

- Never apply grease material to switch contact points to prevent damage.

ECM/VARIOUS SENSORS

- Since each component is a high-precision part, great care should be taken not to apply any sharp impacts during removal and installation.

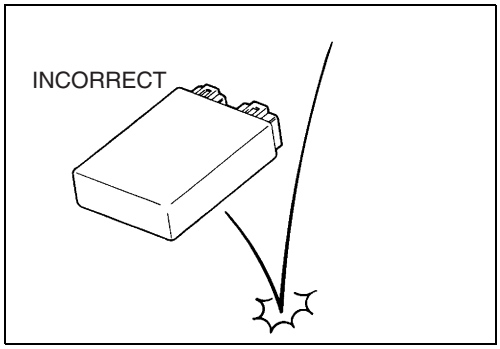

- Be careful not to touch the electrical terminals of the ECM. The static electricity from your body may damage this part.

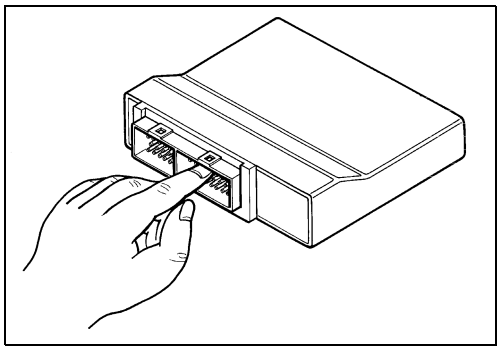

- When disconnecting and connecting the ECM, make sure to turn OFF the ignition switch ①, or electronic parts may get damaged.

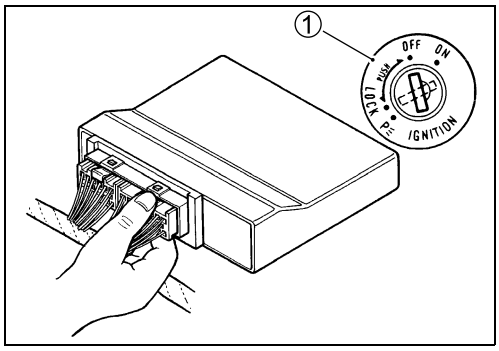

- Battery connection in reverse polarity is strictly prohibited. Such a wrong connection will damage the components of the FI system instantly when reverse power is applied.

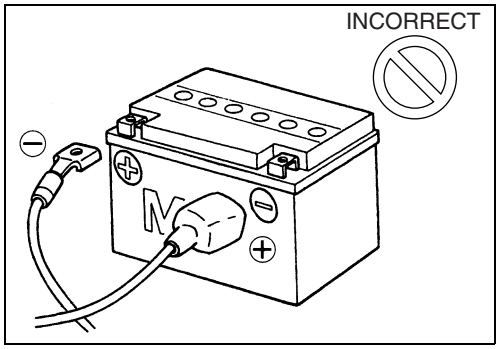

- Removing any battery terminal of a running engine is strictly prohibited.
  The moment such removal is made, damaging counter electromotive force will be applied to the ECM which may result in serious damage.

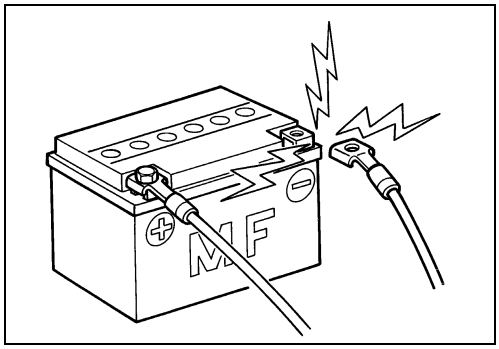

- Before measuring voltage at each terminal, check to make sure that battery voltage is 11 V or higher. Terminal voltage check with a low voltage battery will lead to erroneous diagnosis.

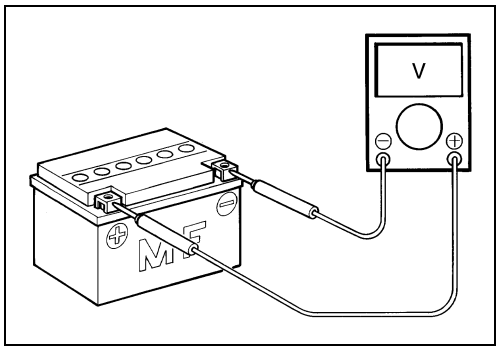

- Never connect any tester (voltmeter, ohmmeter, or whatever) to the ECM when its coupler is disconnected.
  Otherwise, damage to ECM may result.
- Never connect an ohmmeter to the ECM with its coupler connected. If attempted, damage to ECM or sensors may result.
- Be sure to use a specified voltmeter/ohmmeter. Otherwise, accurate measurements may not be obtained and personal injury may result.

ELECTRICAL CIRCUIT INSPECTION PROCEDURE

While there are various methods for electrical circuit inspection, described here is a general method to check for open and short circuit using an ohmmeter and a voltmeter.

OPEN CIRCUIT CHECK

Possible causes for the open circuits are as follows. As the cause can exist in the connector/coupler or terminal, they need to be checked carefully.

- Loose connection of connector/coupler.
- Poor contact of terminal (due to dirt, corrosion or rust, poor contact tension, entry of foreign object etc.).
- Wire harness being open.
- Poor terminal-to-wire connection.

- Disconnect the negative cable from the battery.
- Check each connector/coupler at both ends of the circuit being checked for loose connection. Also check for condition of the coupler lock if equipped.

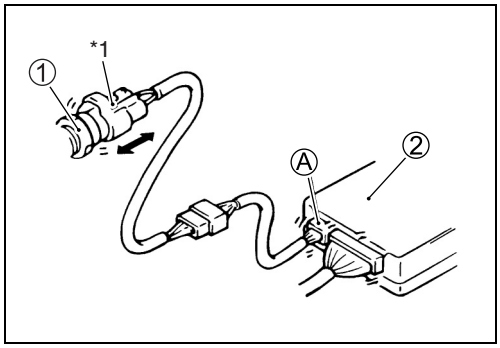

① Sensor
② ECM
*1 Check for loose connection.

- Using a test male terminal, check the female terminals of the circuit being checked for contact tension.
  Check each terminal visually for poor contact (possibly caused by dirt, corrosion, rust, entry of foreign object, etc.). At the same time, check to make sure that each terminal is fully inserted in the coupler and locked.
  If contact tension is not enough, rectify the contact to increase tension or replace.
  The terminals must be clean and free of any foreign material which could impede proper terminal contact.

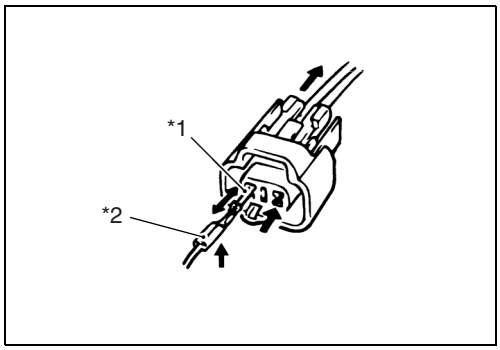

*1 Check contact tension by inserting and removing.
*2 Check each terminal for bend and proper alignment.

- Using continuity inspect or voltage check procedure as described below, inspect the wire harness terminals for open circuit and poor connection. Locate abnormality, if any.

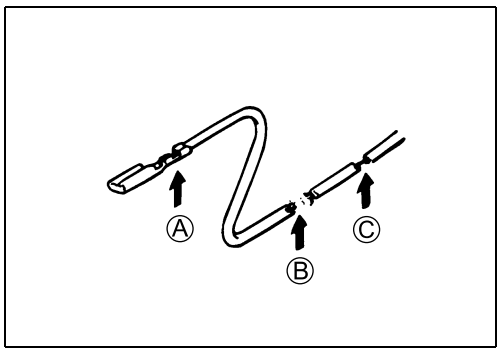

Ⓐ Looseness of crimping
Ⓑ Open
Ⓒ Thin wire (a few strands left)

Continuity check

- Measure resistance across coupler Ⓑ (between Ⓐ and Ⓒ in the figure).
  If no continuity is indicated (infinity or over limit), the circuit is open between terminals Ⓐ and Ⓒ.

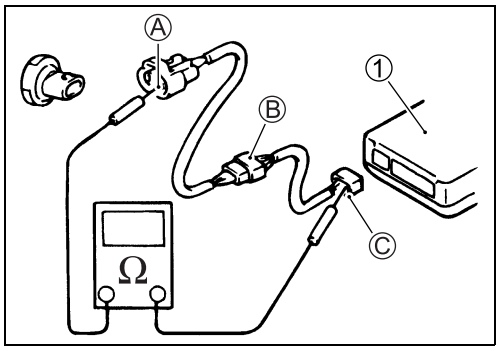

① ECM

- Disconnect the coupler Ⓑ and measure resistance between couplers Ⓐ and Ⓑ.
  If no continuity is indicated, the circuit is open between couplers Ⓐ and Ⓑ. If continuity is indicated, there is an open circuit between couplers Ⓑ' and Ⓒ or an abnormality in coupler Ⓑ' or coupler Ⓒ.

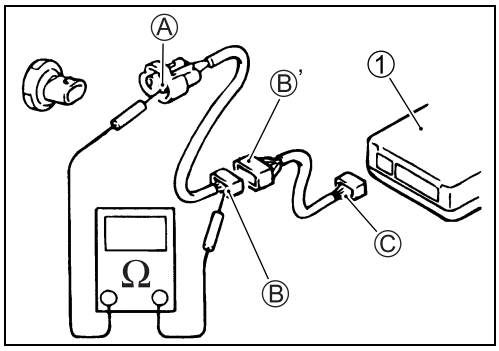

① ECM

VOLTAGE CHECK

If voltage is supplied to the circuit being checked, voltage check can be used as circuit check.

- With all connectors/couplers connected and voltage applied to the circuit being checked, measure voltage between each terminal and body ground.

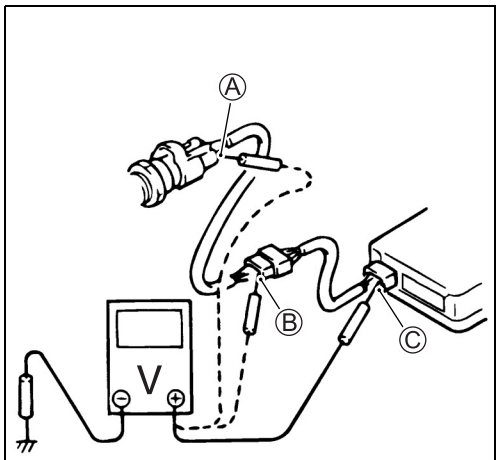

If measurements were taken as shown in the figure at the right and results are as listed below, it means that the circuit is open between terminals Ⓐ and Ⓑ.

Voltage Between:

Ⓒ and body ground: Approx. 5 V
Ⓑ and body ground: Approx. 5 V
Ⓐ and body ground: 0 V

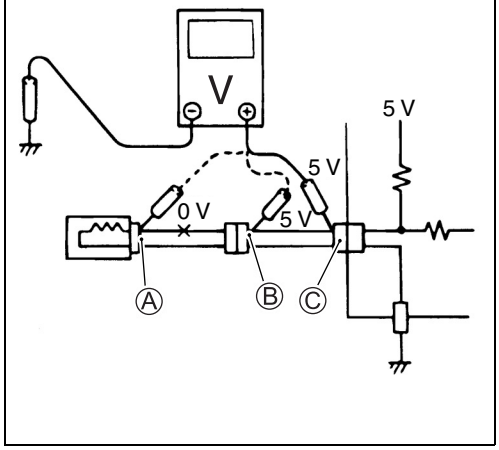

Also, if measured values are as listed below, a resistance (abnormality) exists which causes the voltage drop in the circuit between terminals Ⓐ and Ⓑ.

Voltage Between:

Ⓒ and body ground: Approx. 5 V
Ⓑ and body ground: Approx. 5 V ——— 2 V voltage drop
Ⓐ and body ground: 3 V

SHORT CIRCUIT CHECK (WIRE HARNESS TO GROUND)

- Disconnect the negative cable from the battery.
- Disconnect the connectors/couplers at both ends of the circuit to be checked.

NOTE:
If the circuit to be checked branches to other parts as shown, disconnect all connectors/couplers of those parts. Otherwise, diagnosis will be misled.

- Measure resistance between terminal at one end of circuit (Ⓐ terminal in figure) and body ground. If continuity is indicated, there is a short circuit to ground between terminals Ⓐ and Ⓒ.

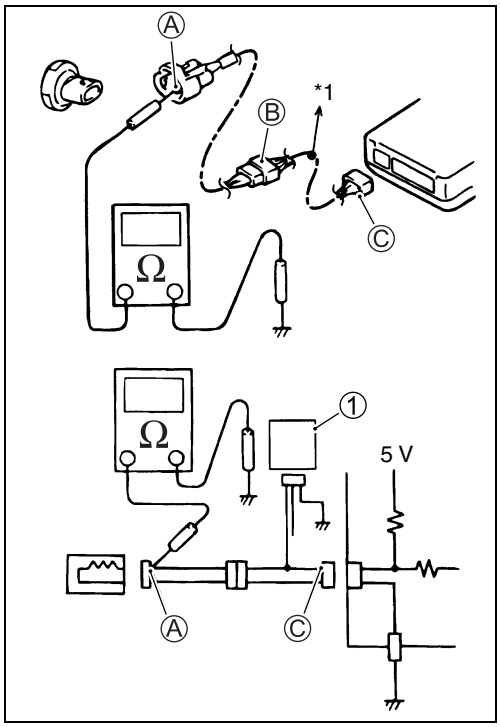

① Other parts
*1 To other parts

- Disconnect the connector/coupler included in circuit (coupler Ⓑ) and measure resistance between terminal Ⓐ and body ground.
  If continuity is indicated, the circuit is shorted to the ground between terminals Ⓐ and Ⓑ.

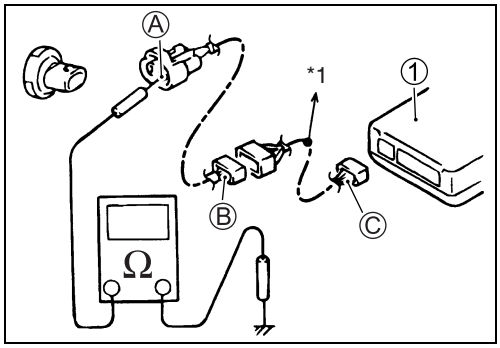

① ECM
*1 To other parts

USING THE MULTI-CIRCUIT TESTER

- Use the Suzuki multi-circuit tester set (09900-25008).
- Use well-charged batteries in the tester.
- Be sure to set the tester to the correct testing range.

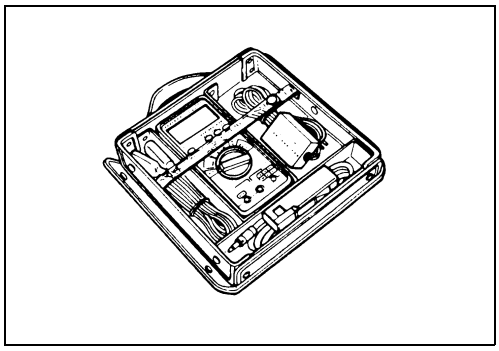

USING THE TESTER

- Incorrectly connecting the ⊕ and ⊖ probes may cause the inside of the tester to burnout.
- If the voltage and current are not known, make measurements using the highest range.
- When measuring the resistance with the multi-circuit tester ①, ∞ will be shown as 10.00 MΩ and "1" flashes in the display.
- Check that no voltage is applied before making the measurement. If voltage is applied the tester may be damaged.
- After using the tester, turn the power off.

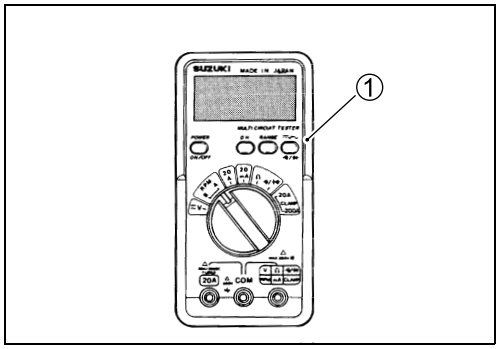

TOOL 09900-25008: Multi-circuit tester set

NOTE:

** When connecting the multi-circuit tester, use the needle pointed probe to the back side of the lead wire coupler and connect the probes of tester to them.*

** Use the needle pointed probe to prevent the rubber of the water proof coupler from damage.*

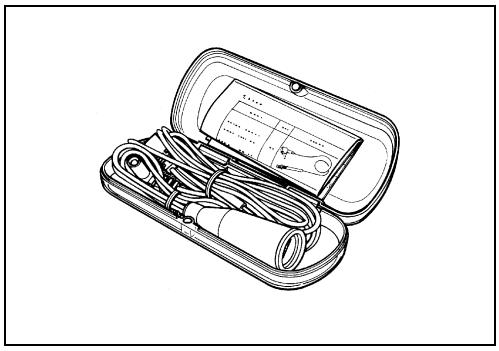

TOOL 09900-25009: Needle pointed probe set

FI SYSTEM TECHNICAL FEATURES

INJECTION TIME (INJECTION VOLUME)

The factors to determine the injection time include the basic fuel injection time, which is calculated on the basis of intake air pressure, engine speed and throttle opening angle, and various compensations.
These compensations are determined according to the signals from various sensors that detect the engine and driving conditions.

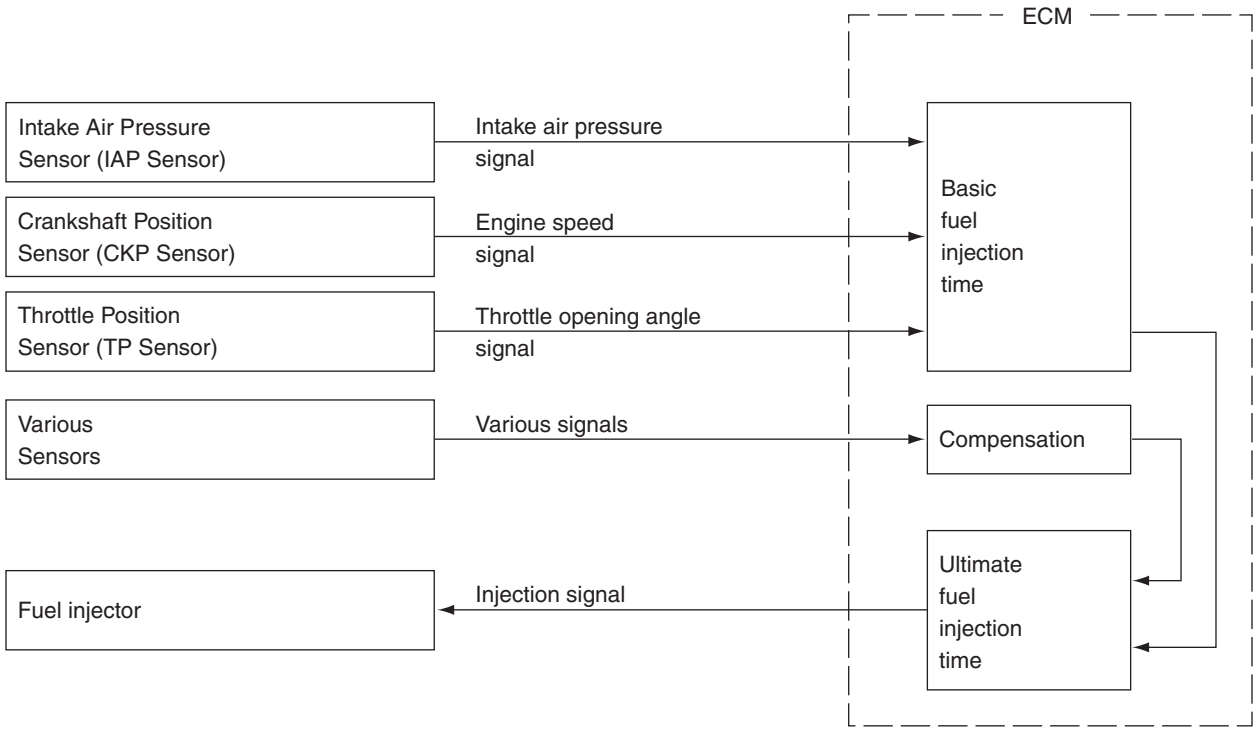

COMPENSATION OF INJECTION TIME (VOLUME)

The following different signals are output from the respective sensors for compensation of the fuel injection time (volume).

SIGNAL	DESCRIPTION
ENGINE COOLANT TEMPERATURE SENSOR SIGNAL	When engine coolant temperature is low, injection time (volume) is increased.
HEATED OXYGEN SENSOR SIGNAL	Air/fuel ratio is compensated to the theoretical ratio from density of oxygen in exhaust gasses. The compensation occurs in such a way that more fuel is supplied if detected air/fuel ratio is lean and less fuel is supplied if it is rich.
BATTERY VOLTAGE SIGNAL	ECM operates on the battery voltage and at the same time, it monitors the voltage signal for compensation of the fuel injection time (volume). A longer injection time is needed to adjust injection volume in the case of low voltage.
ENGINE RPM SIGNAL	At high speed, the injection time (volume) is increased.
STARTING SIGNAL	When starting engine, additional fuel is injected during cranking engine.
ACCELERATION SIGNAL/ DECELERATION SIGNAL	During acceleration, the fuel injection time (volume) is increased in accordance with the throttle opening speed and engine rpm. During deceleration, the fuel injection time (volume) is decreased.

INJECTION STOP CONTROL

SIGNAL	DESCRIPTION
TIP-OVER SENSOR SIGNAL (FUEL SHUT-OFF)	When the motorcycle tips over, the tip-over sensor sends a signal to the ECM. Then, this signal cuts OFF current supplied to the fuel pump, fuel injector and ignition coil.
OVER-REV. LIMITER SIGNAL	The fuel injector stops operation when engine rpm reaches rev. limit rpm.

FI SYSTEM PARTS LOCATION

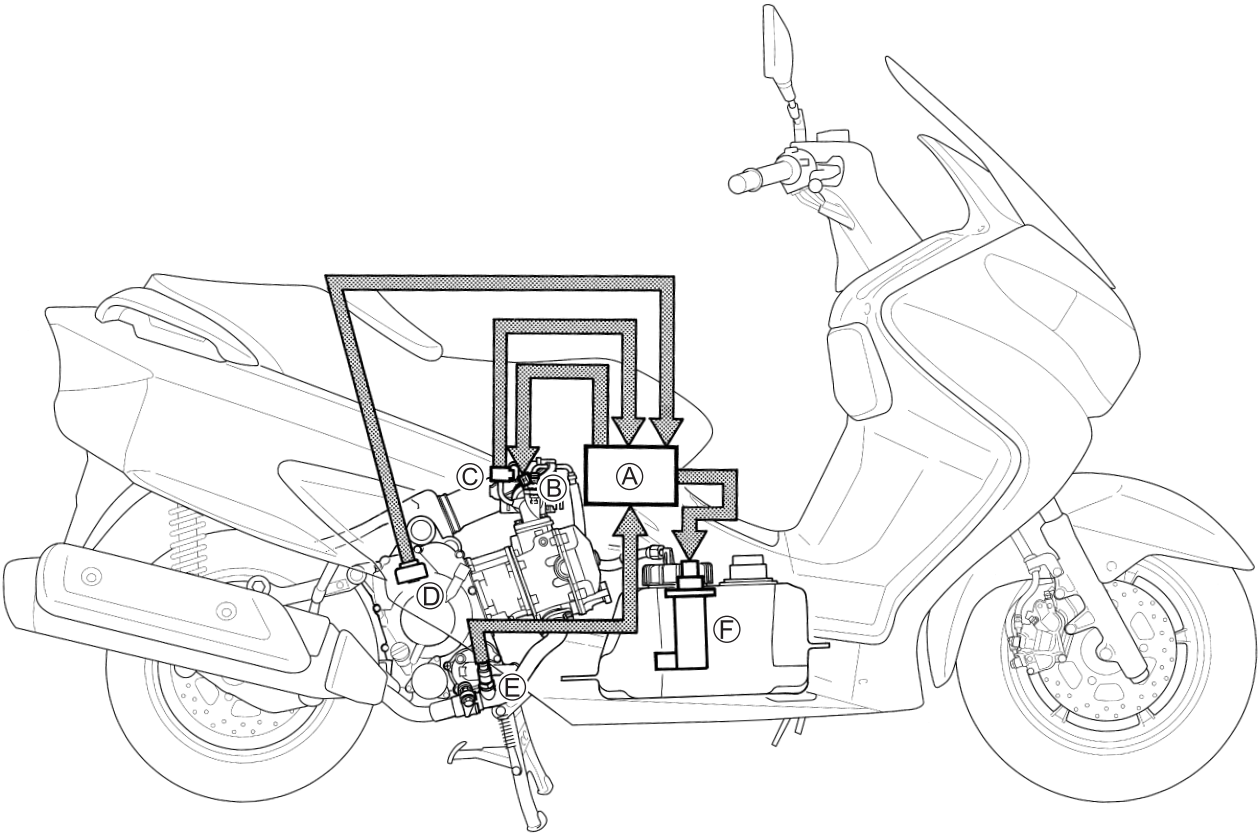

Ⓐ ECM
Ⓑ Fuel Injector
Ⓒ Intake Air Pressure Sensor (IAPS)
Ⓓ Crankshaft Position Sensor (CKPS)
Ⓔ Heated Oxygen Sensor (HO2S)
Ⓕ Fuel Pump (FP)

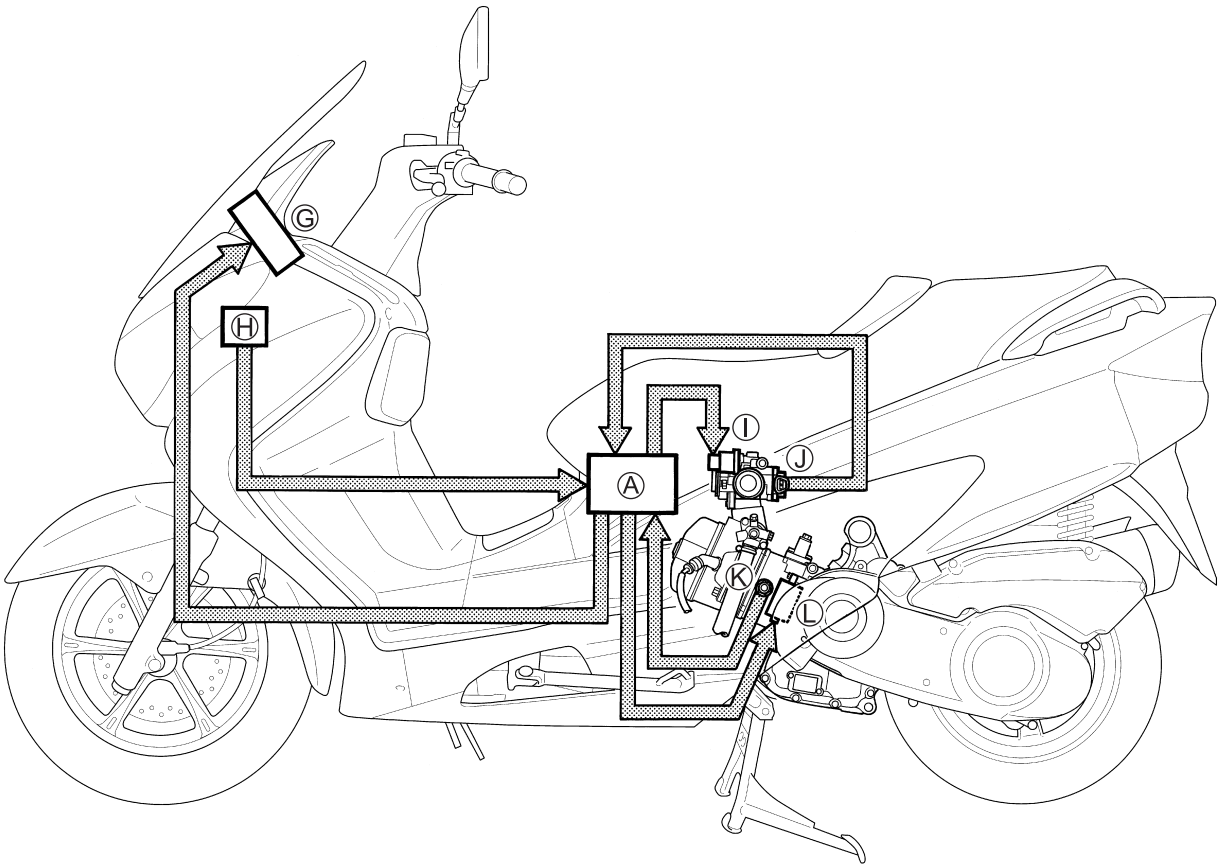

Ⓐ ECM
Ⓖ Speedometer
Ⓗ Tip-Over Sensor (TOS)
Ⓘ Idle Speed Control valve (ISC valve)
Ⓙ Throttle Position Sensor (TPS)
Ⓚ Engine Coolant Temperature Sensor (ECTS)
Ⓛ Ignition coil (IG coil)

FI SYSTEM WIRING DIAGRAM

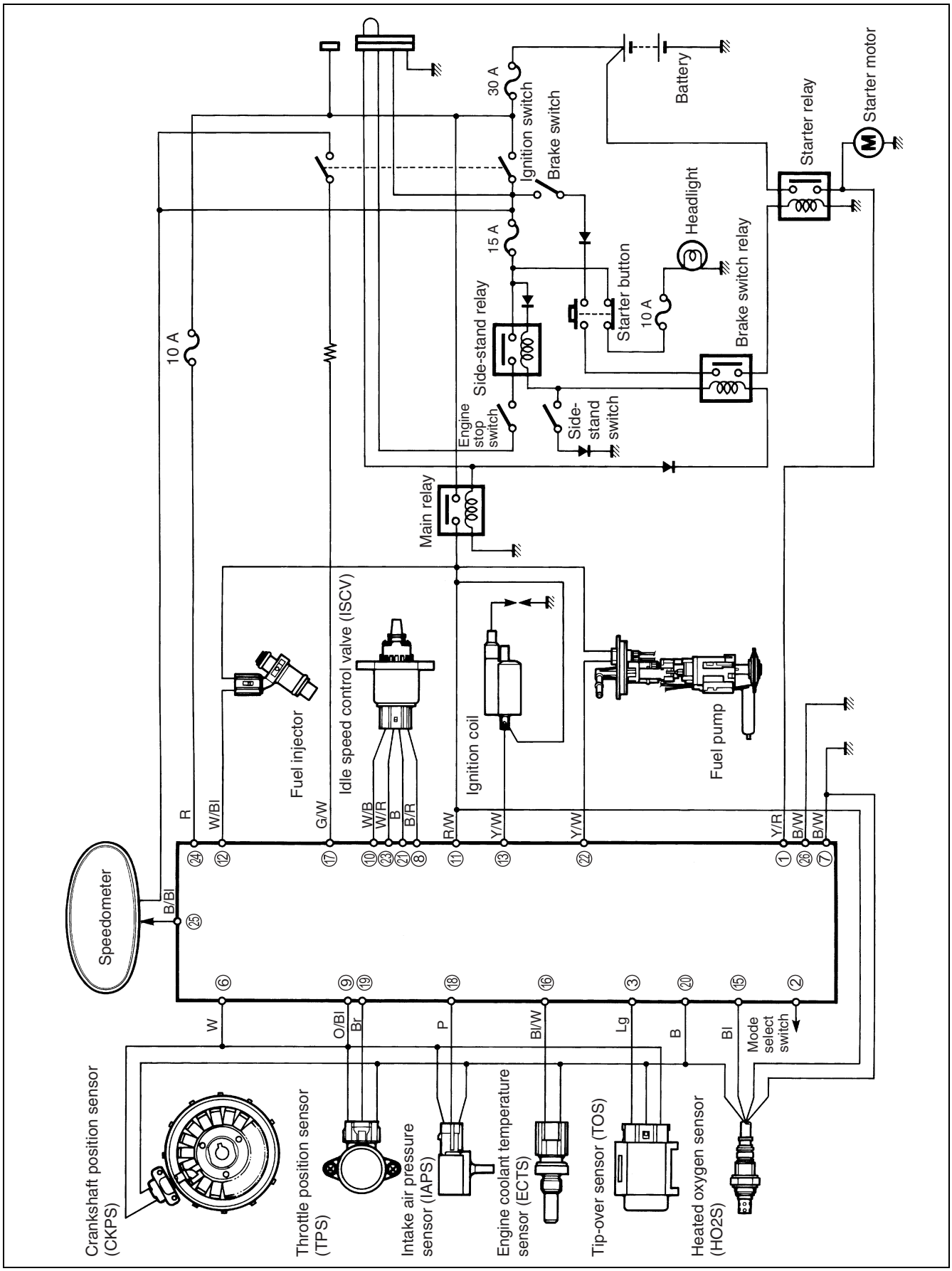

ECM TERMINAL

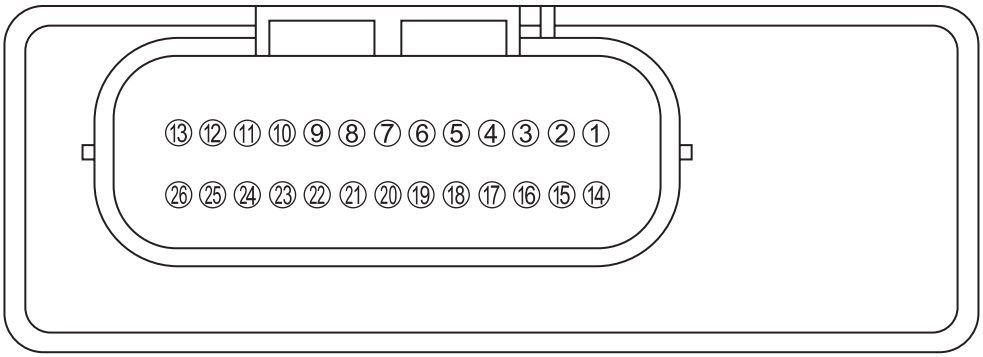

ECM coupler

TERMINAL NO.	CIRCUIT	TERMINAL NO.	CIRCUIT
①	Starter motor	⑭	Mode select switch
②	Mode select switch	⑮	HO2 sensor (OX)
③	TO sensor (TO)	⑯	ECT sensor (ECT)
④	—	⑰	Ignition switch
⑤	—	⑱	IAP sensor (IAP)
⑥	CKP sensor (CKP+)	⑲	TP sensor (TP)
⑦	ECM ground (E1)	⑳	Sensor ground (E2)
⑧	ISC valve motor (IS2B)	㉑	ISC valve motor (IS2A)
⑨	Power source for sensors (VCC)	㉒	Fuel pump (FP)
⑩	ISC valve motor (IS1A)	㉓	ISC valve motor (IS1B)
⑪	Power source (+B)	㉔	Power source for backup
⑫	Fuel injector	㉕	FI indicator light
⑬	Ignition coil	㉖	Ignition system ground

SELF-DIAGNOSIS FUNCTION

The self-diagnosis function is incorporated in the ECM. The function has two modes, “User mode” and “Dealer mode”. The user can only be notified by the FI indicator light. To check the function of the individual FI system devices, the dealer mode is provided. In this check, the special tool is necessary to read the code of the malfunction items.

USER MODE

MALFUNCTION		FI INDICATOR LIGHT INDICATION
“NO”		—
“YES”	Engine can start	FI indicator light turns ON. *1
	Engine can not start	FI indicator light turns ON and blinks. *2

*1
When one of the signals is not received by ECM, the fail-safe circuit works and injection is not stopped.
*2
The injection signal is stopped, when the crankshaft position sensor signal, tip-over sensor signal, ignition signal, injector signal, fuel pump signal or ignition switch signal is not sent to ECM.

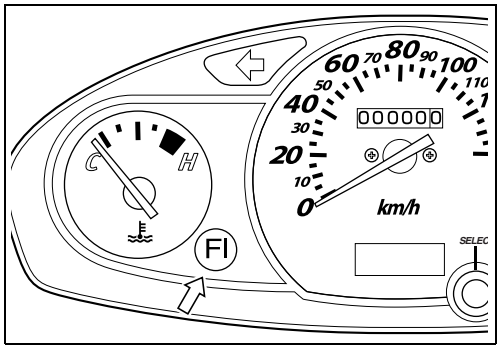

NOTE:
The FI indicator light lights up for 3 sec. for bulb checking, when the ignition switch is turned on.

DEALER MODE

The defective function is memorized in the ECM. Use the special tool's coupler to connect to the dealer mode coupler. The memorized malfunction code is displayed by the flashing pattern of FI indicator light. Malfunction means that the ECM does not receive signal from the devices. These affected devices are indicated in the code form.

TOOL 09930-82720: Mode select switch

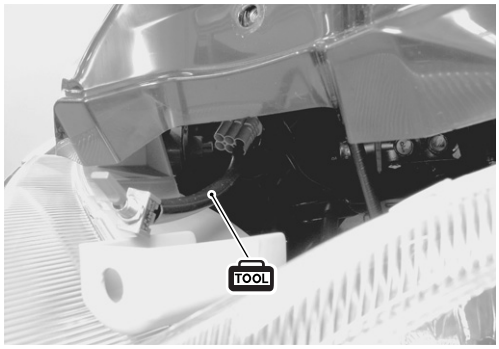

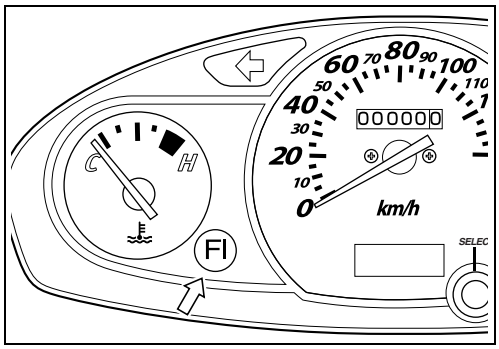

CAUTION

Before checking DTC (Diagnostic Trouble Code), do not disconnect the ECM lead wire coupler. If the coupler from the ECM is disconnected, the DTC memory is erased and can not be checked.

MALFUNCTION	FI INDICATOR LIGHT INDICATION
"NO"	OFF
"YES"	ON

CODE	MALFUNCTION PART	REMARKS
00	None	No defective part
12	Crankshaft position sensor (CKPS)	Pick-up coil signal
13	Intake air pressure sensor (IAPS)	
14	Throttle position sensor (TPS)	
15	Engine coolant temperature sensor (ECTS)	
23	Tip-over sensor (TOS)	
24	Ignition signal (IG coil)	
32	Injector signal (FI)	
40	ISC valve	
41	Fuel pump control system (FP control system)	Fuel pump
42	Ignition switch signal (IG switch signal)	
44	HO2 sensor	

The malfunction code is indicated from small code to large code.

FAIL-SAFE FUNCTION

FI system is provided with fail-safe function to allow the engine to start and the motorcycle to run in a minimum performance necessary even under malfunction condition.

ITEM	FAIL-SAFE MODE	STARTING ABILITY	RUNNING ABILITY
IAP sensor	Intake air pressure is fixed to 101 kPa (760 mmHg).	“YES”	“YES”
TP sensor	The throttle opening is fixed to full open position. Ignition timing is also fixed.	“YES”	“YES”
ECT sensor	Engine coolant temperature value is fixed to 80 °C. Cooling fan is fixed on position.	“YES”	“YES”
HO2 sensor	Feedback compensation is inhibited. (Air/fuel ratio is fixed to normal.)	“YES”	“YES”
ISC valve	When motor disconnection or lock occurs, power from ECM is shut off.	“YES”	“YES”

The engine can start and can run even if the above signal is not received from each sensor. But, the engine running condition is not complete, providing only emergency help (by fail-safe circuit). In this case, it is necessary to bring the motorcycle to the workshop for complete repair.

FI SYSTEM TROUBLESHOOTING

CUSTOMER COMPLAINT ANALYSIS

Record details of the problem (failure, complaint) and how it occurred as described by the customer. For this purpose, use of such an inspection form such as below will facilitate collecting information required for proper analysis and diagnosis.

EXAMPLE: CUSTOMER PROBLEM INSPECTION FORM

User name:	Model:	VIN:	
Date of issue:	Date Reg.	Date of problem:	Mileage:

FI indicator light condition	☐ Always ON ☐ Sometimes ON ☐ Always OFF ☐ Good condition

PROBLEM SYMPTOMS	
☐ **Difficult Starting**	☐ **Poor Driveability**
☐ No cranking	☐ Hesitation on acceleration
☐ No initial combustion	☐ Back fire/☐ After fire
☐ No combustion	☐ Lack of power
☐ Poor starting at	☐ Surging
(☐ cold ☐ warm ☐ always)	☐ Abnormal knocking
☐ Other _____	☐ Engine rpm jumps briefly
	☐ Other _____
☐ **Poor Idling**	☐ **Engine Stall when**
☐ Poor fast Idle	☐ Immediately after start
☐ Abnormal idling speed	☐ Throttle valve is opened
(☐ High ☐ Low) (r/min)	☐ Throttle valve is closed
☐ Unstable	☐ Load is applied
☐ Hunting (r/min to r/min)	☐ Other _____
☐ Other _____	
☐ OTHERS:	

MOTORCYCLE/ENVIRONMENTAL CONDITION WHEN PROBLEM OCCURS	
Environmental condition	
Weather	☐ Fair ☐ Cloudy ☐ Rain ☐ Snow ☐ Always ☐ Other _____
Temperature	☐ Hot ☐ Warm ☐ Cool ☐ Cold (°C) ☐ Always
Frequency	☐ Always ☐ Sometimes (times/ day, month) ☐ Only once ☐ Under certain condition
Road	☐ Urban ☐ Suburb ☐ Highway ☐ Mountainous (☐ Uphill ☐ Downhill) ☐ Tarmacadam ☐ Gravel ☐ Other _____
Motorcycle condition	
Engine condition	☐ Cold ☐ Warming up phase ☐ Warmed up ☐ Always ☐ Other at starting ☐ Immediately after start ☐ Racing without load ☐ Engine speed (r/min)
Motorcycle condition	During driving: ☐ Constant speed ☐ Accelerating ☐ Decelerating ☐ Right hand corner ☐ Left hand corner ☐ At stop ☐ Motorcycle speed when problem occurs (km/h) ☐ Other _____

NOTE:
The above form is a standard sample. The form should be modified according to conditions and characteristics of each market.

VISUAL INSPECTION

- Prior to diagnosis using the mode select switch or SDS, perform the following visual inspections. The reason for visual inspection is that mechanical failures (such as oil leakage) are not output with the use of mode select switch or SDS.

* Engine oil level and leakage (☞2-9)
* Engine coolant level and leakage (☞2-12)
* Fuel level and leakage (☞2-8)
* Clogged air cleaner element (☞2-4)
* Battery condition (☞9-39)
* Throttle cable play (☞2-11)
* Vacuum hose looseness, bend and disconnection
* Broken fuse
* FI indicator light operation (☞4-16)
* Exhaust gas leakage and noise (☞2-6)
* Each coupler disconnection
* Clogged radiator fins (☞7-5)

SELF-DIAGNOSTIC PROCEDURES

NOTE:

* *Do not disconnect the coupler from ECM, battery cable from battery, ECM ground wire from engine or main fuse before confirming the DTC (Diagnostic Trouble Code) stored in memory. Such disconnection will erase the memorized information in ECM memory.*
* *DTC stored in ECM memory can be checked by the special tool.*
* *Before checking DTC, read SELF-DIAGNOSIS FUNCTION "USER MODE and DEALER MODE" (☞4-16 and -17) carefully to have good understanding as to what functions are available and how to use it.*
* *Be sure to read "PRECAUTIONS IN SERVICING" (☞4-3) before inspection and observe what is written there.*

- Remove the front cover. (☞8-4)
- Connect the special tool to the dealer mode coupler at the wiring harness, and start the engine or crank the engine for more than 4 seconds.
- Turn the special tool's switch ON and check the malfunction code to determine the malfunction part.

TOOL 09930-82720: Mode select switch

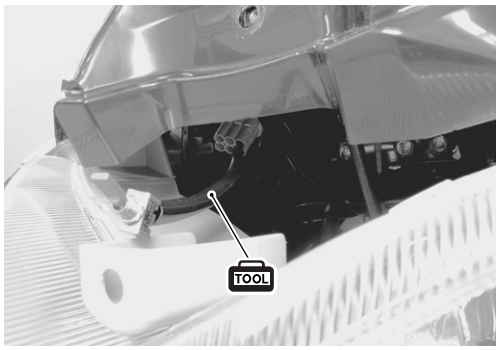

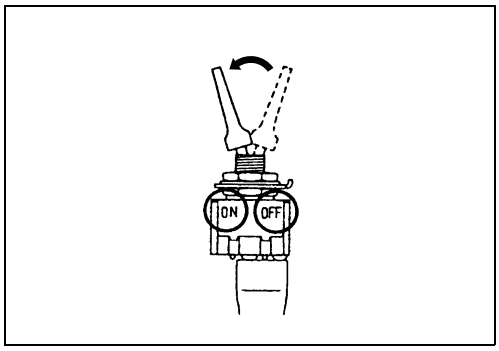

UNDERSTANDING THE DTC (Diagnostic Trouble Code)

A two-digit DTC is shown through the flashing pattern of the FI indicator light.
The DTCs are displayed from a smaller number to a larger number in that order. When all the applicable DTCs have been displayed, the displaying of the DTCs repeat from the first one again.
If no DTC is recorded, the FI indicator light will not turned on.

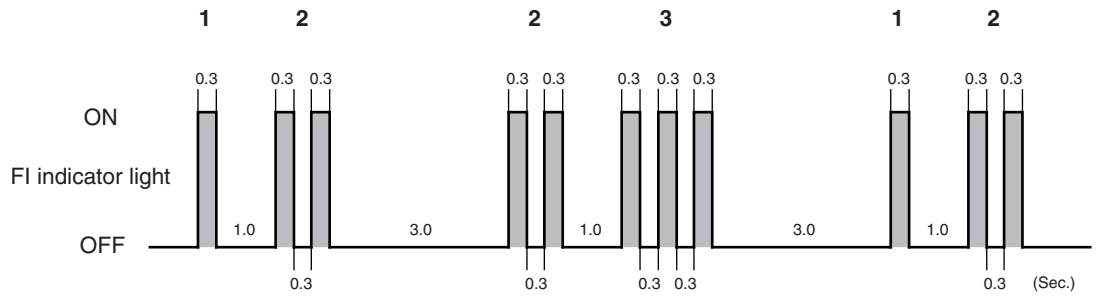

DTC INDICATION CHART

FLASHING PATTERN	DTC No.	MALFUNCTION PART
	00	None
1 2	12	CKP sensor (☞4-30)
1 3	13	IAP sensor (☞4-33)
1 4	14	TP sensor (☞4-38)
1 5	15	ECT sensor (☞4-43)
2 3	23	TO sensor (☞4-47)
2 4	24	Ignition coil (☞4-50)
3 2	32	Fuel injector (☞4-51)
4 0	*40	ISC valve (☞4-53)
4 1	41	Fuel pump (☞4-57)
4 2	42	Ignition switch (☞4-59)
4 4	44	HO2 sensor (☞4-60)

*40

40 code has no first digit display. For this reason, the interval Ⓐ between the displays as shown below is longer than the others.

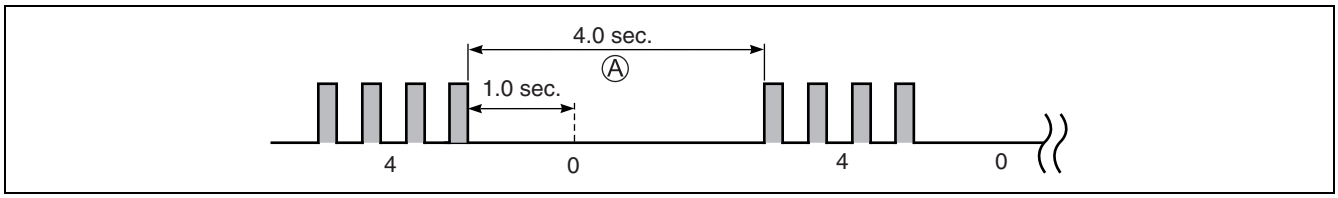

SELF-DIAGNOSIS RESET PROCEDURE

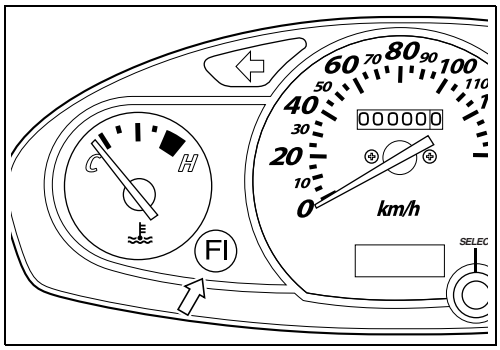

- After repairing the trouble, turn OFF the ignition switch and turn ON again.
- If the FI indicator light turns OFF, the malfunction is cleared.
- Disconnect the special tool from the dealer mode coupler.

NOTE:

** Even though the Current DTC is cleared, Past DTC (previous malfunction history code) still remains stored in the ECM. Therefore, erase the Past DTC memorized in the ECM using SDS.*

** DTC is memorized in the ECM also when the wire coupler of any sensor is disconnected. Therefore, when a wire coupler has been disconnected at the time of diagnosis, erase the stored DTC (Past DTC) using SDS.*

USE OF SDS DIAGNOSTIC PROCEDURES

** Do not disconnect the coupler from ECM, battery cable from battery, ECM ground wire from engine or main fuse before confirming the DTC (Diagnostic Trouble Code) stored in memory. Such disconnection will erase the memorized information in ECM memory.*

** DTC stored in ECM memory can be checked by SDS.*

** Be sure to read "PRECAUTIONS IN SERVICING" (☞4-3) before inspection and observe what is written there.*

- Remove the front cover. (☞8-4)
- Set up the SDS tool. (Refer to the SDS operation manual for further details.)
- Read the DTC (Diagnostic Trouble Code) and show data when trouble (displaying data at the time of DTC) according to instructions displayed on SDS.
- SDS is not only used for detecting DTC but also for reproducing and checking on screen the failure condition as described by customers using the trigger.
- How to use trigger. (Refer to the SDS operation manual for further details.)

TOOL 09904-41010: SDS set tool
99565-01010-009: CD-ROM Ver. 9

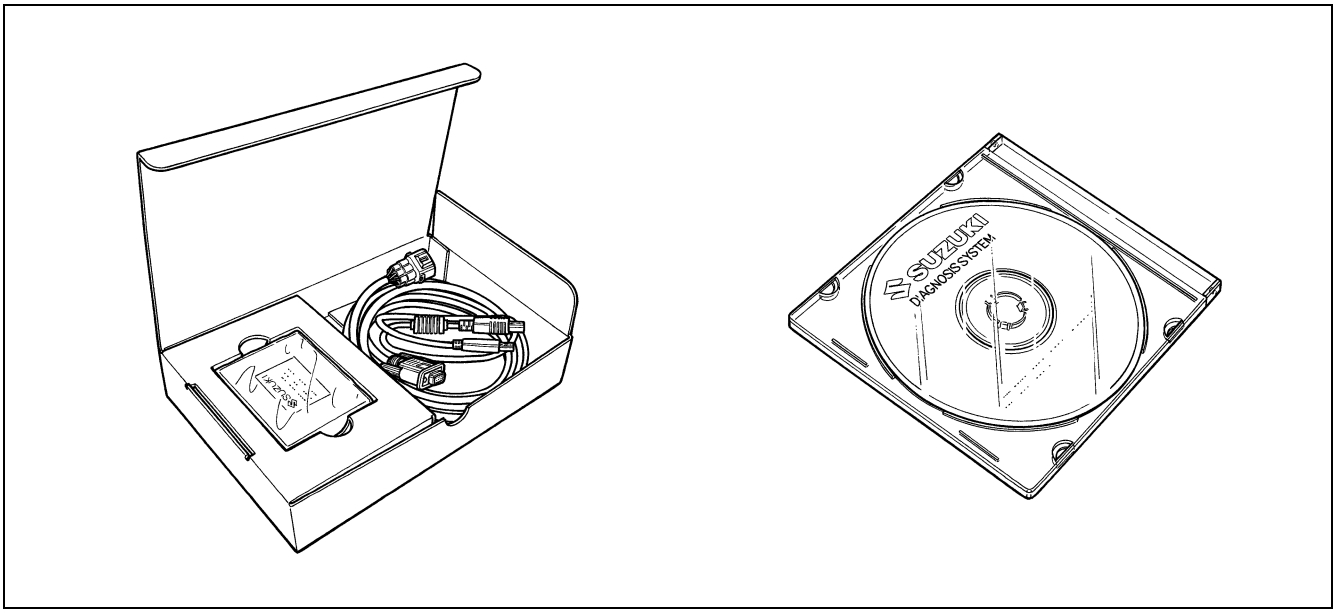

USE OF SDS DIAGNOSIS RESET PROCEDURE

- After repairing the trouble, turn OFF the ignition switch and turn ON again.
- Click the DTC inspection button ①.
- Check the DTC.
- The previous malfunction history code (Past DTC) still remains stored in the ECM. Therefore, erase the history code memorized in the ECM using SDS tool.

NOTE:
The malfunction code is memorized in the ECM also when the wire coupler of any sensor is disconnected. Therefore, when a wire coupler has been disconnected at the time of diagnosis, erase the stored malfunction history code using SDS.

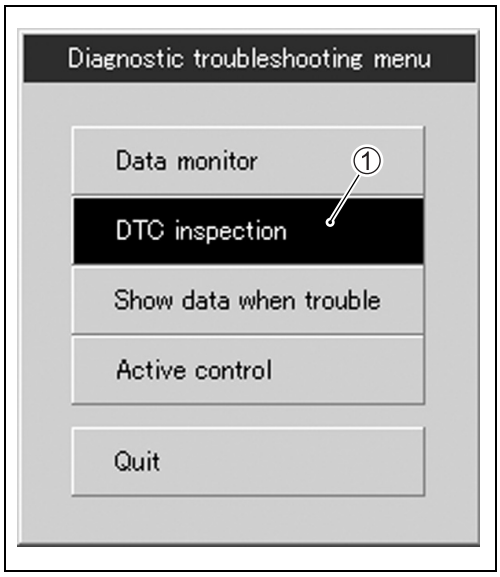

- Click “Clear” ② to delete history code (Past DTC).

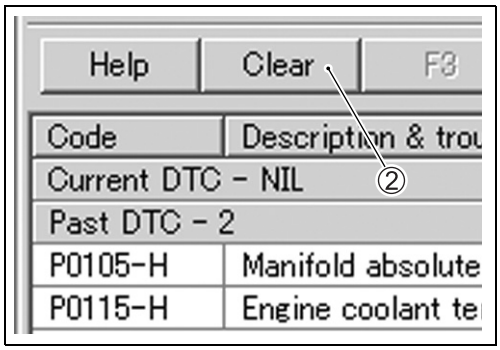

- Follow the displayed instructions.

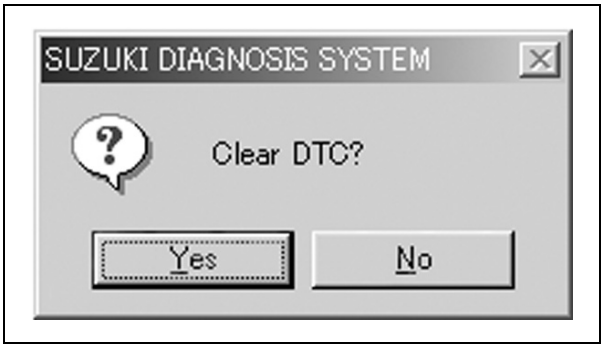

- Check that both “Current DTC” ③ and “Past DTC” ④ are deleted (NIL).

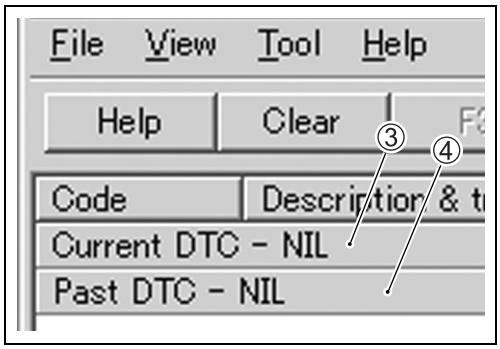

SHOW DATA WHEN TROUBLE (DISPLAING DATA AT THE TIME OF DTC)

ECM stores the engine and driving conditions (in the form of data as shown in the figure) at the moment of the detection of a malfunction in its memory. This data is called “Show data when trouble”.

Therefore, it is possible to know engine and driving conditions (e.g., whether the engine was warm or not, where the motorcycle was running or stopped) when a malfunction was detected by checking the show data when trouble. This show data when trouble function can record the maximum of two Diagnostic Trouble Codes in the ECM.

Also, ECM has a function to store each show data when trouble for two different malfunctions in the order as the malfunction is detected. Utilizing this function, it is possible to know the order of malfunctions that have been detected. Its use is helpful when rechecking or diagnosing a trouble.

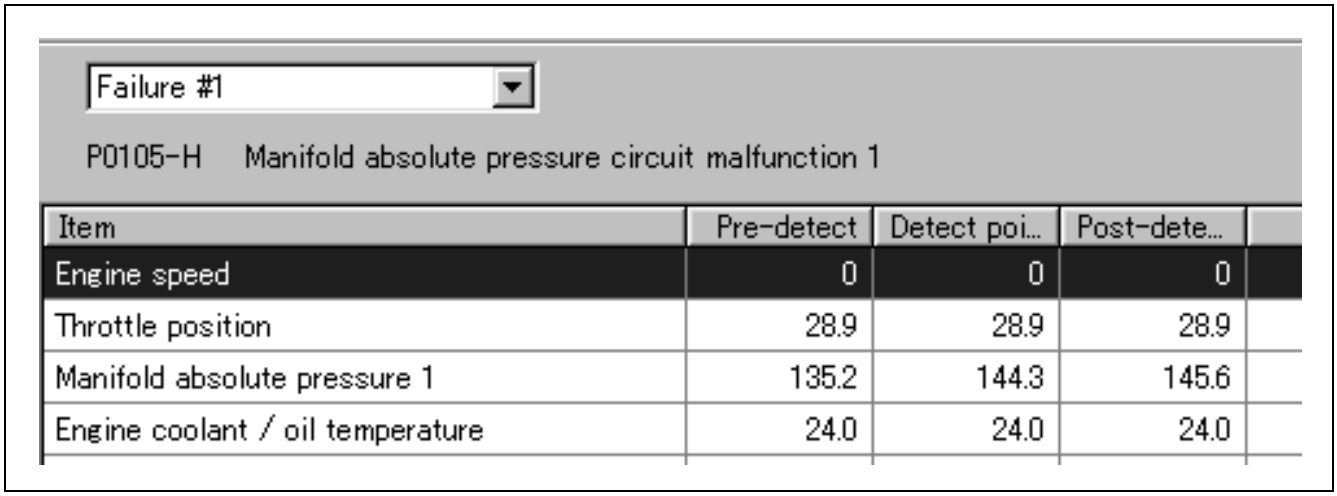

Item	Pre-detect	Detect poi...	Post-dete...
Engine speed	0	0	0
Throttle position	28.9	28.9	28.9
Manifold absolute pressure 1	135.2	144.3	145.6
Engine coolant / oil temperature	24.0	24.0	24.0

- Click “Show data when trouble” ① to display the data. By clicking the drop down button ②, either “Failure #1” or “Failure #2” can be selected.

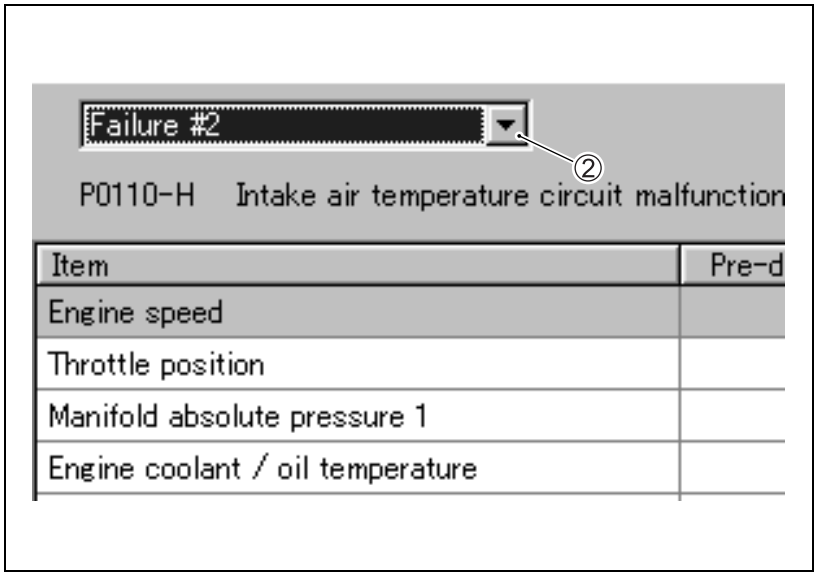

MALFUNCTION CODE AND DEFECTIVE CONDITION

DTC No.		DETECTED ITEM	DETECTED FAILURE CONDITION	CHECK FOR
00		NO FAULT	————	————
12		CKP sensor	The signal does not reach ECM for 3 sec. or more, after receiving the starter signal.	CKP sensor wiring and mechanical parts CKP sensor, lead wire/coupler connection
P0335				
13		IAP sensor	The sensor should produce following voltage. 0.5 V ≦ sensor voltage < 4.85 V In other than the above range, 13 (P0105) is indicated.	IAP sensor, lead wire/coupler connection
P0105	H		Sensor voltage is higher than specified value.	IAP sensor circuit open or shorted to VCC or ground circuit open
	L		Sensor voltage is lower than specified value.	IAP sensor circuit shorted to ground or VCC circuit open
14		TP sensor	The sensor should produce following voltage. 0.2 V ≦ sensor voltage < 4.80 V In other than the above range, 14 (P0120) is indicated.	TP sensor, lead wire/coupler connection
P0120	H		Sensor voltage is higher than specified value.	TP sensor circuit shorted to VCC or ground circuit open
	L		Sensor voltage is lower than specified value.	TP sensor circuit open or shorted to ground or VCC circuit open
15		ECT sensor	The sensor voltage should be the following. 0.15 V ≦ sensor voltage < 4.85 V In other than the above range, 15 (P0115) is indicated.	ECT sensor, lead wire/coupler connection
P0115	H		Sensor voltage is higher than specified value.	ECT sensor circuit open or ground circuit open
	L		Sensor voltage is lower than specified value.	ECT sensor circuit shorted to ground
23		TO sensor	The sensor voltage should be the following for 2 sec. and more, after ignition switch is turned ON. 0.2 V ≦ sensor voltage < 4.7 V In other than the above value, 23 (P1651) is indicated.	TO sensor, lead wire/coupler connection
P1651	H		Sensor voltage is higher than specified value.	TO sensor circuit shorted to VCC or ground circuit open
	L		Sensor voltage is lower than specified value.	TO sensor circuit open or shorted to ground or VCC circuit open

DTC No.		DETECTED ITEM	DETECTED FAILURE CONDITION	CHECK FOR
24 P0351		Ignition signal	CKP sensor (pick-up coil) signal is produced, but signal from ignition coil is interrupted 8 times or more continuously. In this case, the code 24 (P0351) is indicated.	Ignition coil, wiring/coupler connection, power supply from the battery
32 P0201		Fuel injector	CKP sensor (pickup coil) signal is produced, but fuel injector signal is interrupted 4 times or more continuously. In this case, the code 32 (P0201) is indicated.	Primary fuel injector, wiring/coupler connection, power supply to the injector
40 (P0505)		ISC valve	The circuit voltage of motor drive is unusual. Idle speed is higher than the normal condition.	ISC valve circuit open or shorted to ground Power source circuit open ISC valve is fixed to full open Disconnected ISC valve hose
40 (P0506)			Idle speed is lower than the desired idle speed.	Air passage clogged ISC valve is fixed ISC valve pre-set position is incorrect
40 (P0507)			Idle speed is higher than the desired idle speed.	ISC valve hose connection ISC valve is fixed ISC valve pre-set position is incorrect
41		Fuel pump	No voltage is applied to the fuel pump, although main relay is turned ON, or voltage is applied to fuel pump although main relay is turned OFF.	Main relay, lead wire/coupler connection, power source to main relay and fuel injectors
P0230	H		Voltage is applied to fuel pump although main relay is turned OFF.	Main relay switch circuit shorted to power source Main relay (switch side)
	L		No voltage is applied to the fuel pump, although main relay is turned ON.	Main relay circuit open or short Main relay (coil side)
42 P1650		Ignition switch	Ignition switch signal is not input to the ECM.	Ignition switch, lead wire/coupler, etc.
44 P0130		HO2 sensor	HO2 sensor output voltage is not input to ECM during engine operation and running condition. In other than the above value, 44 (P0130) is indicated.	HO2 sensor circuit open or shorted to ground

“12” (P0335) CKP SENSOR CIRCUIT MALFUNCTION

DETECTED CONDITION	POSSIBLE CAUSE
The signal does not reach ECM for 3 sec. or more, after receiving the starter signal.	• Metal particles or foreign material being stuck on the CKP sensor and rotor tip • CKP sensor circuit open or short • CKP sensor malfunction • ECM malfunction

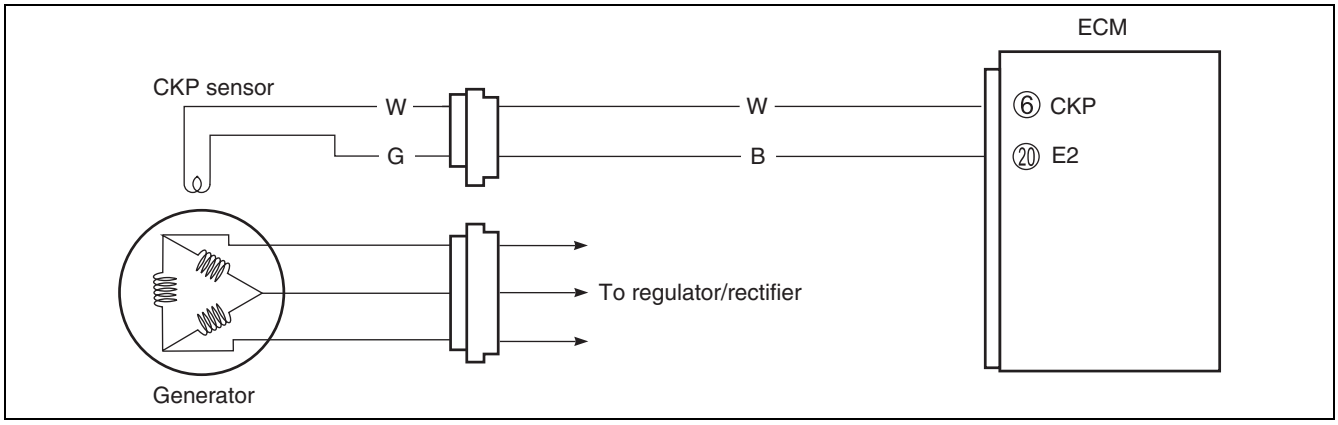

INSPECTION

Step 1

1) Turn the ignition switch OFF.
2) Remove the right side leg shield. (☞8-8)
3) Check the CKP sensor coupler ① for loose or poor contacts. If OK, then measure the CKP sensor resistance.

4) Disconnect the CKP sensor coupler and measure the resistance.

DATA **CKP sensor resistance: 158 – 238 Ω (W – G)**

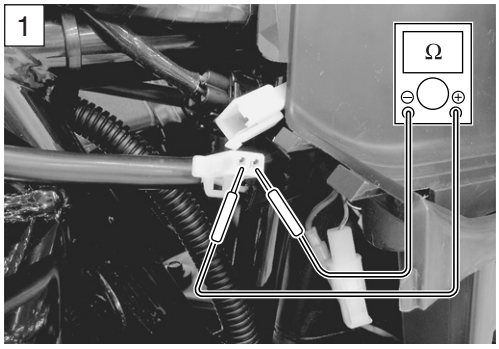

5) If OK, then check the continuity between each terminal and ground.

DATA CKP sensor continuity: ∞ Ω (Infinity)
(W – Ground)
(G – Ground)

TOOL 09900-25008: Multi-circuit tester set

Tester knob indication: Resistance (Ω)

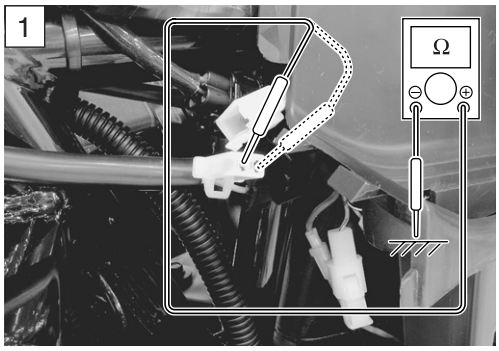

Are the resistance and continuity OK?

YES	Go to step 2.
NO	Replace the CKP sensor with a new one.

6) After repairing the trouble, clear the DTC using SDS tool. (☞4-26)

Step 2

1) Crank the engine a few seconds with the starter motor, and measure the CKP sensor peak voltage at the coupler.
2) Repeat the above test procedure a few times and measure the highest peak voltage.

DATA CKP sensor peak voltage: 2.0 V and more
(⊕ W – ⊖ G)

① Peak volt adaptor

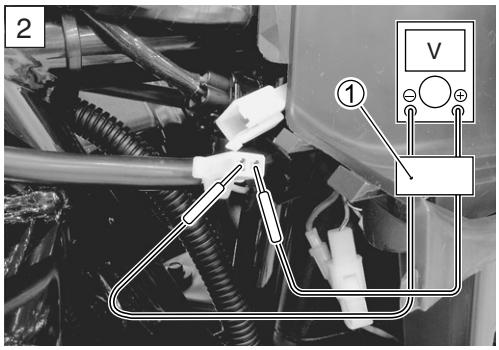

TOOL 09900-25008: Multi-circuit tester set

Tester knob indication: Voltage (⎓)

Is the voltage OK?

YES	• W or B wire open or shorted to ground. • Loose or poor contacts on the CKP sensor coupler or ECM coupler (terminal ⑥ or ⑳). • If wire and connection are OK, intermittent trouble or faulty ECM. • Recheck each terminal and wire harness for open circuit and poor connection. • Replace the ECM with a known good one, and inspect it again.
NO	• Inspect that metal particles or foreign material stuck on the CKP sensor and rotor tip. • If there are no metal particles and foreign material, then replace the CKP sensor with a new one.

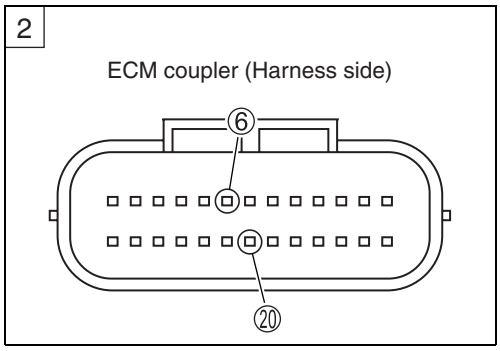

CAUTION

When using the multi-circuit tester, do not strongly touch the terminal of the ECM coupler with a needle pointed tester probe to prevent the terminal damage or terminal bend.

3) After repairing the trouble, clear the DTC using SDS tool. (☞4-26)

“13” (P0105-H/L) IAP SENSOR CIRCUIT MALFUNCTION

		DETECTED CONDITION	POSSIBLE CAUSE
13		IAP sensor voltage is not within the following range. 0.5 V ≦ Sensor voltage < 4.85 V *NOTE:* *Note that atmospheric pressure varies depending on weather conditions as well as altitude.* *Take that into consideration when inspecting voltage.*	• Clogged vacuum passage between throttle body and IAP sensor. • Air being drawn from vacuum passage between throttle body and IAP sensor. • IAP sensor circuit open or shorted to ground. • IAP sensor malfunction. • ECM malfunction.
P0105	H	Sensor voltage is higher than specified value.	• IAP sensor circuit open or shorted to VCC or ground circuit open. • IAP sensor circuit shorted to ground or VCC circuit open.
	L	Sensor voltage is lower than specified value.	

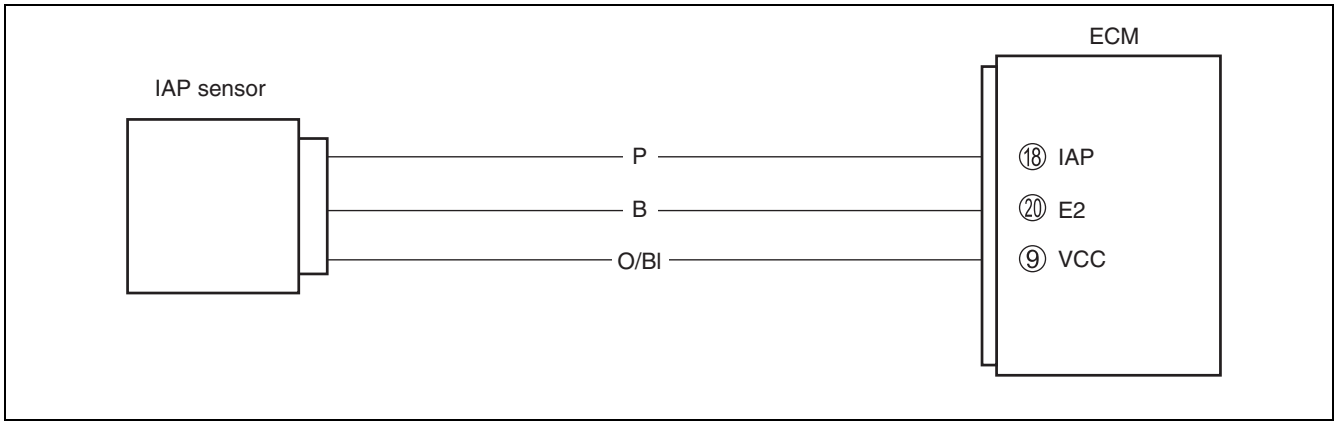

INSPECTION

Step 1 (When indicating 13:)

1) Turn the ignition switch OFF.
2) Remove the front frame cover. (☞8-8)
3) Check the IAP sensor coupler ① for loose or poor contacts.
   If OK, then measure the IAP sensor input voltage.

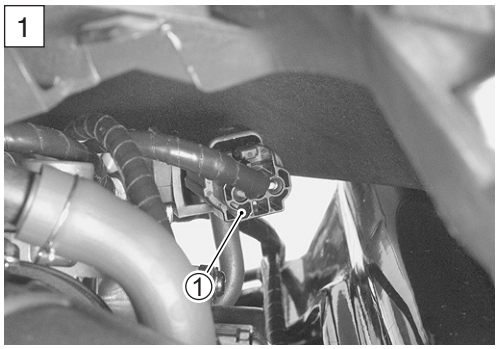

4) Disconnect the IAP sensor coupler.
5) Turn the ignition switch ON.
6) Measure the voltage at the O/Bl wire and ground.
7) If OK, then measure the voltage at the O/Bl wire Ⓐ and B wire Ⓑ.

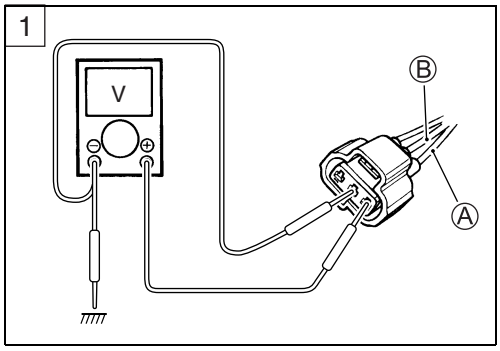

DATA IAP sensor input voltage: 4.5 – 5.5 V
(⊕ O/Bl – ⊖ Ground)
(⊕ O/Bl – ⊖ B)

TOOL 09900-25008: Multi-circuit tester set

Tester knob indication: Voltage (⎓)

Is the voltage OK?

YES	Go to Step 2.
NO	• Loose or poor contacts on the ECM coupler (terminal ⑨ or ⑳). • Open or short circuit in the O/Bl wire or B wire.

Step 1 (When indicating P0105-H:)
1) Turn the ignition switch OFF.
2) Remove the front frame cover. (☞8-8)
3) Check the IAP sensor coupler ① for loose or poor contacts.
If OK, then check the IAP sensor lead wire continuity.

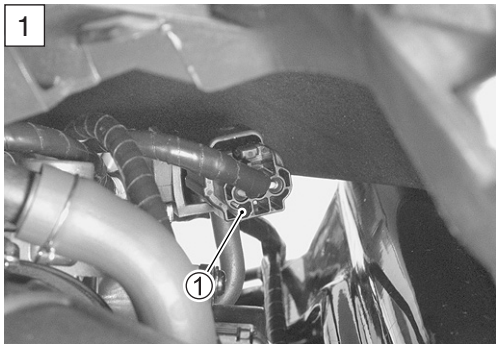

4) Disconnect the IAP sensor coupler.
5) Check the continuity between O/Bl wire Ⓐ and P wire Ⓒ.
If the sound is not heard from the tester, the circuit condition is OK.

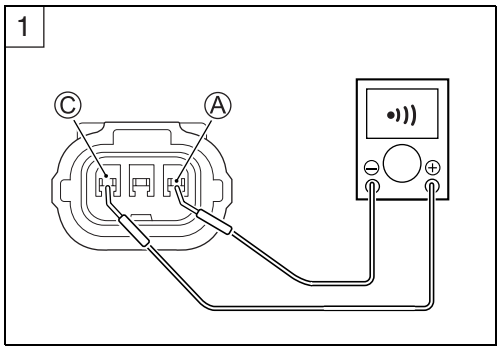

6) Disconnect the ECM coupler.
7) Check the continuity between P wire Ⓒ and terminal ⑱.
8) If OK, then check the continuity between B wire Ⓑ and terminal ⑳.

DATA IAPS lead wire continuity: Continuity (•)))

TOOL 09900-25008: Multi-circuit tester set
09900-25009: Needle pointed probe set

Tester knob indication: Continuity test (•)))

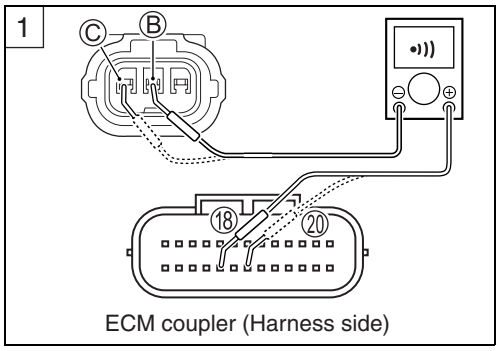

ECM coupler (Harness side)

CAUTION

When using the multi-circuit tester, do not strongly touch the terminal of the ECM coupler with a needle pointed tester probe to prevent the terminal damage or terminal bend.

Is the continuity OK?

YES	Go to Step 2.
NO	P wire shorted to VCC, or B wire open.

9) After repairing the trouble, clear the DTC using SDS tool. (☞4-26)

Step 1 (When indicating P0105-L:)
1) Turn the ignition switch OFF.
2) Remove the front frame cover. (☞8-8)
3) Check the IAP sensor coupler ① for loose or poor contacts. If OK, then check the IAP sensor lead wire continuity.

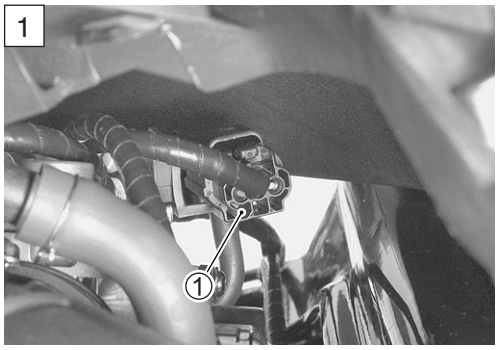

4) Disconnect the IAP sensor coupler.
5) Check the continuity between P wire Ⓒ and ground.
6) Also, check the continuity between P wire Ⓒ and B wire Ⓑ. If the sound is not heard from the tester, the circuit condition is OK.

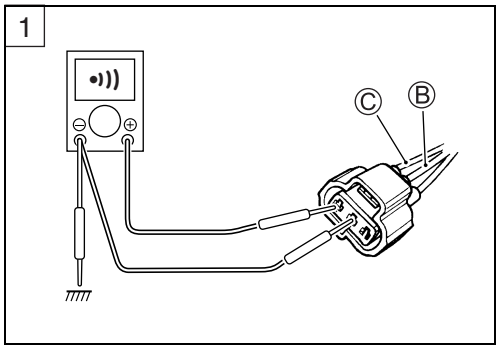

7) Disconnect the ECM coupler.
8) Check the continuity between O/Bl wire Ⓐ and terminal ⑨.
9) Also, check the continuity between P wire Ⓒ and terminal ⑱.

DATA IAPS lead wire continuity: Continuity (•))))

TOOL 09900-25008: Multi-circuit tester set
09900-25009: Needle pointed probe set

Tester knob indication: Continuity test (•))))

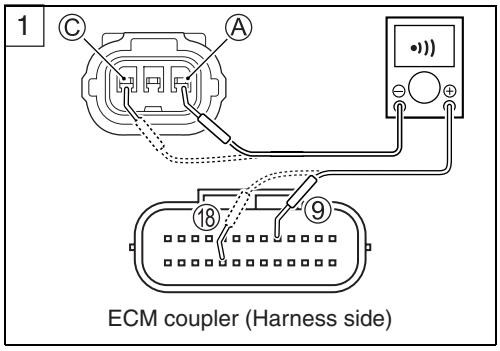

CAUTION

When using the multi-circuit tester, do not strongly touch the terminal of the ECM coupler with a needle pointed tester probe to prevent the terminal damage or terminal bend.

Is the continuity OK?

YES	Go to Step 1 (☞4-33) and go to Step 2.
NO	O/Bl or P wire open, or P wire shorted to ground

10) After repairing the trouble, clear the DTC using SDS tool. (☞4-26)

Step 2
1) Connect the IAP sensor coupler and ECM coupler.
2) Insert the needle pointed probes to the lead wire coupler.
3) Start the engine at idle speed and measure the IAP sensor output voltage (between P and B wires).

DATA IAP sensor output voltage:
2.66 – 3.68 V at 70 – 101 kPa, 15 – 30 °C (⊕ P – ⊖ B)

TOOL 09900-25008: Multi-circuit tester set
09900-25009: Needle pointed probe set

Tester knob indication: Voltage (⎓)

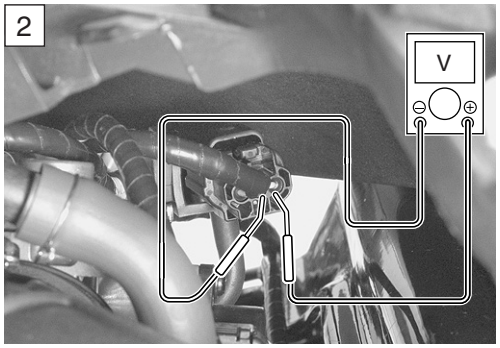

Is the voltage OK?

YES	Go to Step 3.
NO	• Check the vacuum hose for crack or damage. • Open or short circuit in the P wire • If vacuum hose and wire are OK, replace the IAP sensor with a new one.

4) After repairing the trouble, clear the DTC using SDS tool. (☞4-26)

Step 3

1) Turn the ignition switch OFF.
2) Remove the IAP sensor.
3) Connect the vacuum pump gauge to the vacuum port of the IAP sensor.
   Arrange 3 new 1.5 V batteries in series ① (check that total voltage is 4.5 – 5.0 V) and connect ⊖ terminal to the ground terminal ② and ⊕ terminal to the VCC terminal ③.
4) Check the voltage between V-out ④ and ground. Also, check if voltage reduces when vacuum is applied up to 53 kPa (400 mmHg) by using vacuum pump gauge.

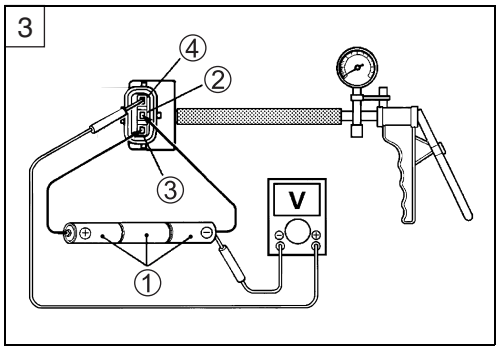

TOOL 09917-47011: Vacuum pump gauge
09900-25008: Multi-circuit tester set

Tester knob indication: Voltage (⎓)

Is the voltage OK?

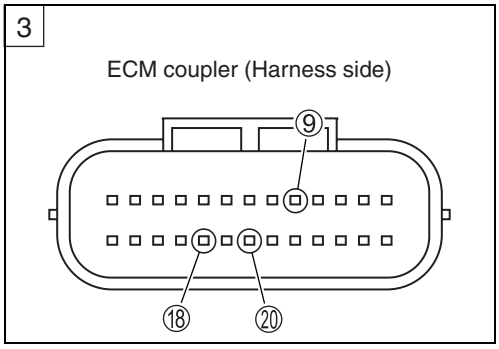

YES	• P, O/Bl or B wire open or shorted to ground, or poor ⑱, ⑨ or ⑳ connection • If wire and connection are OK, intermittent trouble or faulty ECM. • Recheck each terminal and wire harness for open circuit and poor connection. • Replace the ECM with a known good one, and inspect it again.
NO	If check result is not satisfactory, replace the IAP sensor with a new one.

CAUTION

When using the multi-circuit tester, do not strongly touch the terminal of the ECM coupler with a needle pointed tester probe to prevent the terminal damage or terminal bend.

5) After repairing the trouble, clear the DTC using SDS tool. (☞4-26)

“14” (P0120-H/L) TP SENSOR CIRCUIT MALFUNCTION

DETECTED CONDITION			POSSIBLE CAUSE
14		Output voltage is not within the following range. Difference between actual throttle opening and opening calculated by ECM is larger than specified value. 0.2 V ≦ Sensor voltage < 4.8 V	• TP sensor maladjusted • TP sensor circuit open or short • TP sensor malfunction • ECM malfunction
P0120	H	Sensor voltage is higher than specified value.	• TP sensor circuit shorted to VCC or ground circuit open
	L	Sensor voltage is lower than specified value.	• TP sensor circuit open or shorted to ground or VCC circuit open

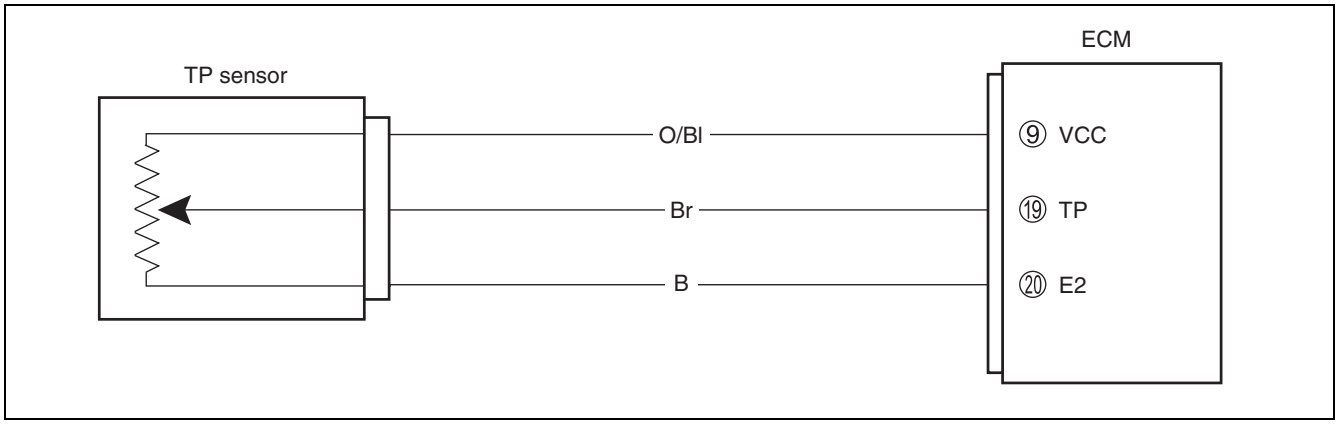

INSPECTION

Step 1 (When indicating 14:)

1) Turn the ignition switch to OFF.
2) Remove the front frame cover. (☞8-8)
3) Check the TP sensor coupler ① for loose or poor contacts.
   If OK, then measure the TP sensor input voltage.

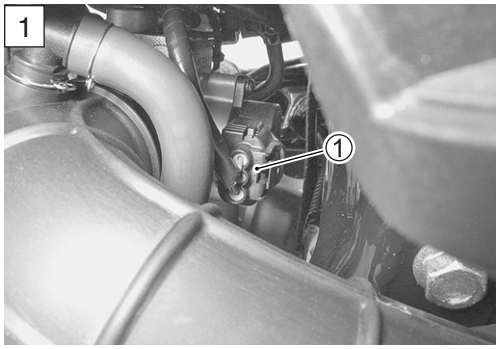

4) Disconnect the TP sensor coupler.
5) Turn the ignition switch ON.
6) Measure the voltage at the O/Bl wire Ⓑ and ground.
7) If OK, then measure the voltage at the O/Bl wire Ⓑ and B wire Ⓒ.

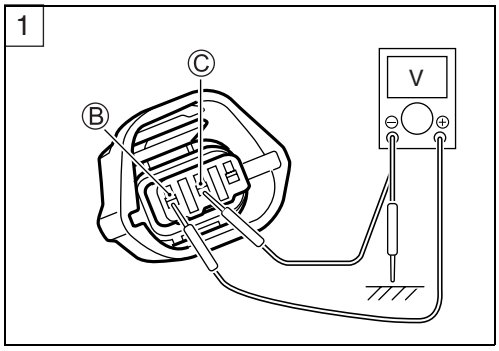

DATA TP sensor input voltage: 4.5 – 5.5 V
(⊕ O/Bl – ⊖ Ground)
(⊕ O/Bl – ⊖ B)

TOOL 09900-25008: Multi-circuit tester set

Tester knob indication: Voltage (⎓)

Is the voltage OK?

YES	Go to Step 2.
NO	• Loose or poor contacts on the ECM coupler (terminal ⑨ or ⑳). • Open or short circuit in the O/Bl wire or B wire.

Step 1 (When indicating P0120-H:)
1) Turn the ignition switch OFF.
2) Remove the front frame cover. (☞8-8)
3) Check the TP sensor coupler ① for loose or poor contacts.
If OK, then check the TP sensor lead wire continuity.

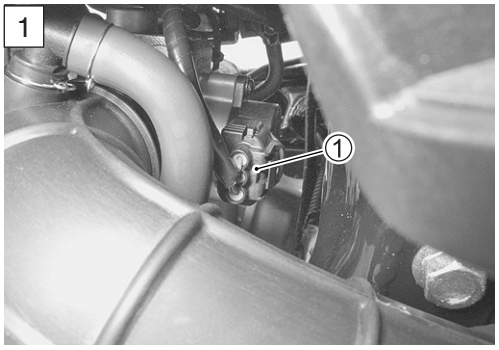

4) Disconnect the TP sensor coupler.
5) Check the continuity between Br wire Ⓐ and O/Bl wire Ⓑ.
If the sound is not heard from the tester, the circuit condition is OK.

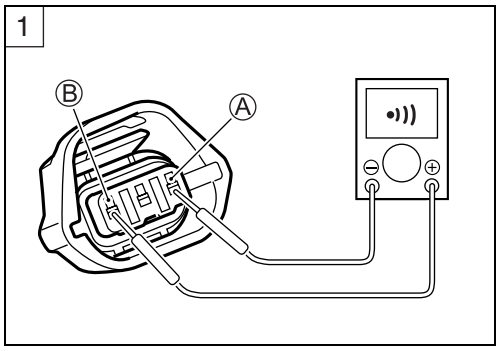

6) Disconnect the ECM coupler.
7) Check the continuity between Br wire Ⓐ and terminal ⑲.
8) Also, check the continuity between B wire Ⓒ and terminal ⑳.

DATA TPS lead wire continuity: Continuity (•)))

TOOL 09900-25008: Multi-circuit tester set
09900-25009: Needle pointed probe set

Tester knob indication: Continuity test (•)))

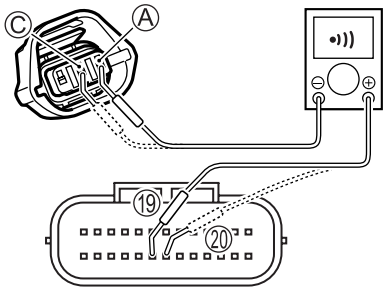

ECM coupler (Harness side)

CAUTION

When using the multi-circuit tester, do not strongly touch the terminal of the ECM coupler with a needle pointed tester probe to prevent the terminal damage or terminal bend.

Is the continuity OK?

YES	Go to Step 2.
NO	Br wire shorted to VCC, or B wire open

9) After repairing the trouble, clear the DTC using SDS tool. (☞4-26)

Step 1 (When indicating P0120-L:)
1) Turn the ignition switch OFF.
2) Remove the front frame cover. (☞8-8)
3) Check the TP sensor coupler ① for loose or poor contacts. If OK, then check the TP sensor lead wire continuity.

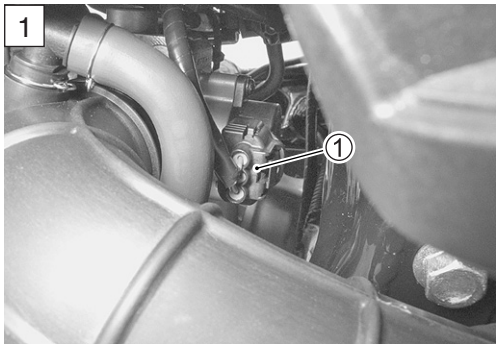

4) Disconnect the TP sensor coupler.
5) Check the continuity between Br wire Ⓐ and ground.
6) Also, check the continuity between Br wire Ⓐ and B wire Ⓒ. If the sound is not heard from the tester, the circuit condition is OK.

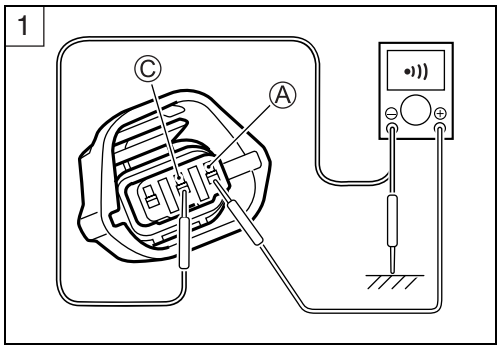

7) Disconnect the ECM coupler.
8) Check the continuity between Br wire Ⓐ and terminal ⑲.
9) Also, check the continuity between O/Bl wire Ⓑ and terminal ⑨.

DATA TPS lead wire continuity: Continuity (•)))

TOOL 09900-25008: Multi-circuit tester set
09900-25009: Needle pointed probe set

Tester knob indication: Continuity test (•)))

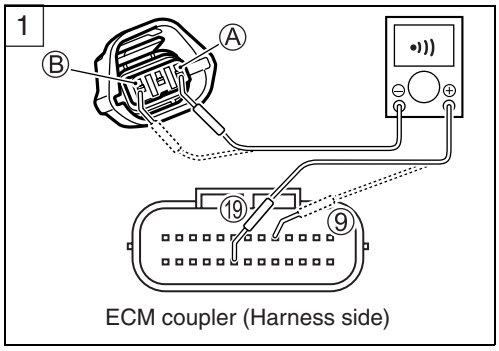

ECM coupler (Harness side)

CAUTION

When using the multi-circuit tester, do not strongly touch the terminal of the ECM coupler with a needle pointed tester probe to prevent the terminal damage or terminal bend.

Is the continuity OK?

YES	Go to Step 1 (☞4-38) and go to Step 2.
NO	O/Bl wire or Br wire open, or Br wire shorted to ground

10) After repairing the trouble, clear the DTC using SDS tool. (☞4-26)

Step 2

1) Connect the TP sensor coupler.
2) Turn the ignition switch ON.
3) Measure the TP sensor output voltage (between ⊕ Br and ⊖ B) by turning the throttle grip.

DATA TP sensor output voltage
Throttle valve is closed: Approx. 0.65 V
Throttle valve is opened: Approx. 3.96 V

TOOL 09900-25008: Multi-circuit tester set
09900-25009: Needle pointed probe set

Tester knob indication: Voltage (⎓)

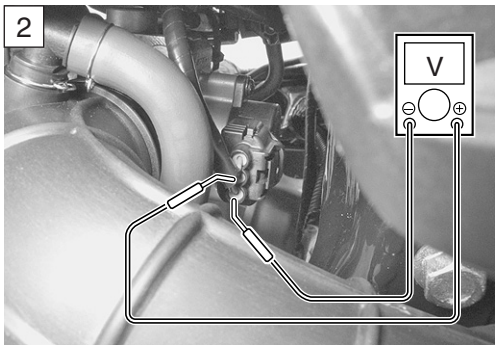

Is the voltage OK?

YES	• Br, O/Bl or B wire open or shorted to ground, or poor ⑲, ⑨ or ⑳ connection • If wire and connection are OK, intermittent trouble or faulty ECM. • Recheck each terminal and wire harness for open circuit and poor connection. • Replace the ECM with a known good one, and inspect it again.
NO	If check result is not satisfactory, replace TP sensor with a new one.

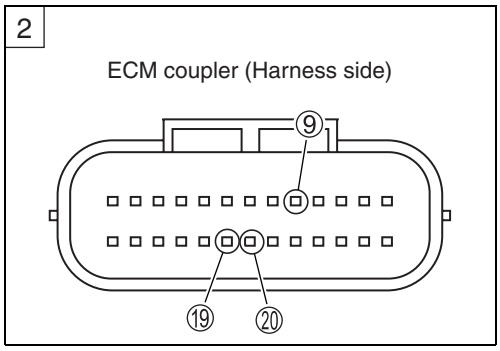

CAUTION

When using the multi-circuit tester, do not strongly touch the terminal of the ECM coupler with a needle pointed tester probe to prevent the terminal damage or terminal bend.

4) After repairing the trouble, clear the DTC using SDS tool. (☞4-26)

“15” (P0115-H/L) ECT SENSOR CIRCUIT MALFUNCTION

DETECTED CONDITION			POSSIBLE CAUSE
15		Output voltage is not within the following range. 0.15 V ≦ Sensor voltage < 4.85 V	• ECT sensor circuit open or short • ECT sensor malfunction • ECM malfunction
P0115	H	Sensor voltage is higher than specified value.	• ECT sensor circuit open or ground circuit open
	L	Sensor voltage is lower than specified value.	• ECT sensor circuit shorted to ground

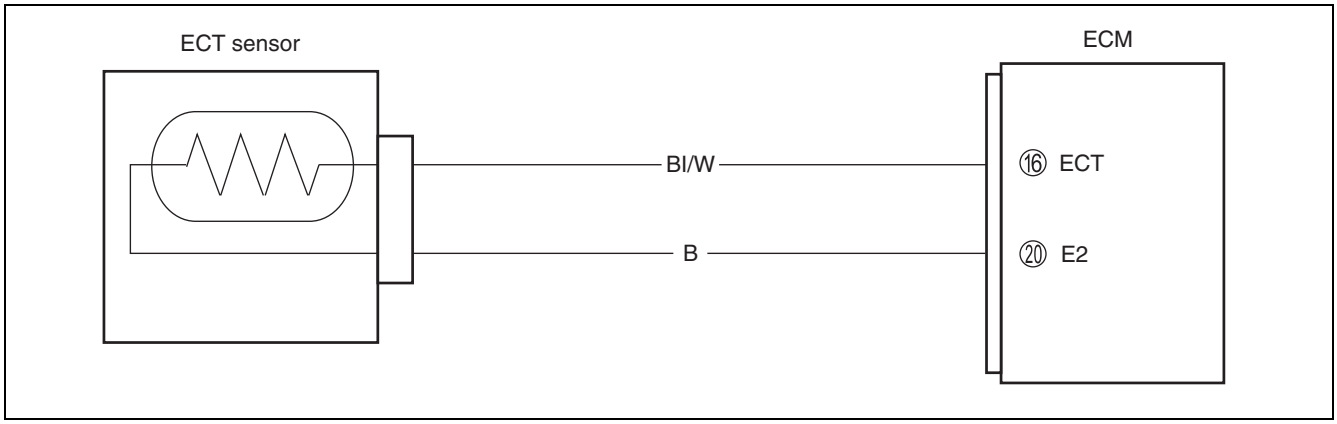

INSPECTION

Step 1 (When indicating 15:)

1) Turn the ignition switch OFF.
2) Remove the frame covers. (☞8-9)
3) Check the ECT sensor coupler ① for loose or poor contacts. If OK, then measure the ECT sensor voltage at the coupler.
4) Disconnect the coupler and turn the ignition switch ON.
5) Measure the voltage between Bl/W wire terminal Ⓐ and ground.
6) If OK, then measure the voltage between Bl/W wire terminal Ⓐ and B wire terminal Ⓑ.

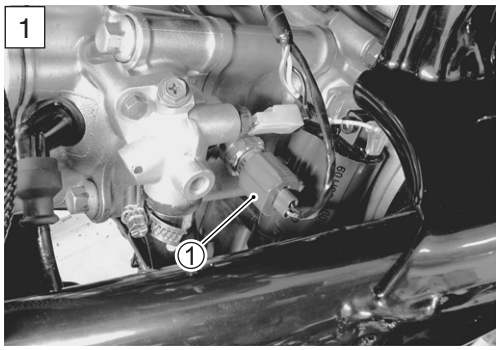

DATA ECT sensor voltage: 4.5 – 5.5 V
(⊕ Bl/W – ⊖ Ground)
(⊕ Bl/W – ⊖ B)

TOOL 09900-25008: Multi-circuit tester set

Tester knob indication: Voltage (⎓)

Is the voltage OK?

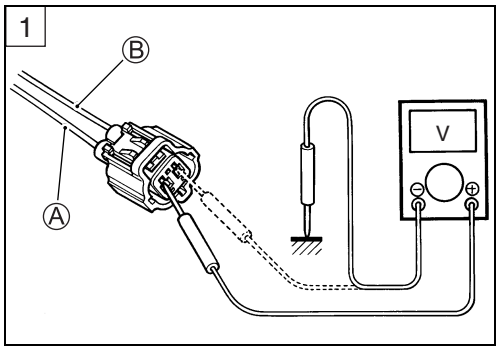

YES	Go to Step 2.
NO	• Loose or poor contacts on the ECM coupler (terminal ⑯ or ⑳). • Open or short circuit in the Bl/W wire or B wire

Step 1 (When indicating P0115-H:)

1) Turn the ignition switch OFF.
2) Remove the frame covers. (☞8-9)
3) Check the ECT sensor coupler ① for loose or poor contacts. If OK, then check the ECT sensor lead wire continuity.

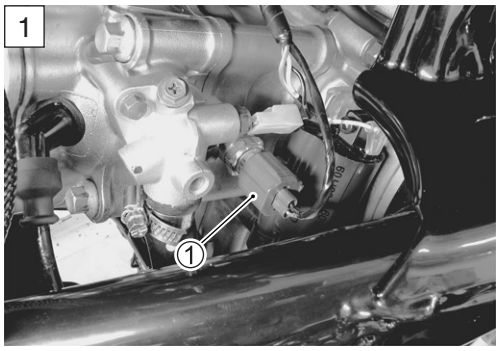

4) Disconnect the ECT sensor coupler and ECM coupler.
5) Check the continuity between Bl/W wire Ⓐ and terminal ⑯.
6) Also, check the continuity between B wire Ⓑ and terminal ⑳.

DATA ECTS lead wire continuity: Continuity (•)))

TOOL 09900-25008: Multi-circuit tester set
09900-25009: Needle pointed probe set

Tester knob indication: Continuity test (•)))

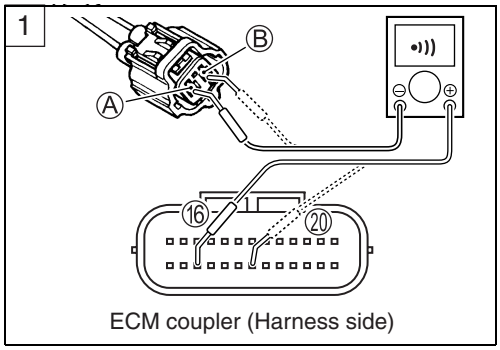

CAUTION

When using the multi-circuit tester, do not strongly touch the terminal of the ECM coupler with a needle pointed tester probe to prevent the terminal damage or terminal bend.

Is the continuity OK?

YES	Go to Step 2.
NO	Bl/W or B wire open

7) After repairing the trouble, clear the DTC using SDS tool. (☞4-26)

Step 1 (When indicating P0115-L:)

1) Turn the ignition switch OFF.
2) Remove the frame covers. (☞8-9)
3) Check the ECT sensor coupler ① for loose or poor contacts. If OK, then measure the output voltage.

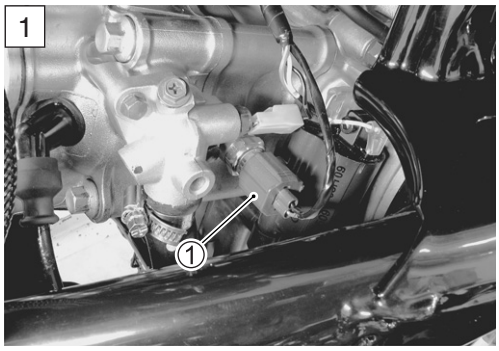

4) Disconnect the ECT sensor coupler.
5) Check the continuity between Bl/W wire Ⓐ and ground. If the sound is not heard from the tester, the circuit condition is OK.

Tester knob indication: Continuity test (•)))

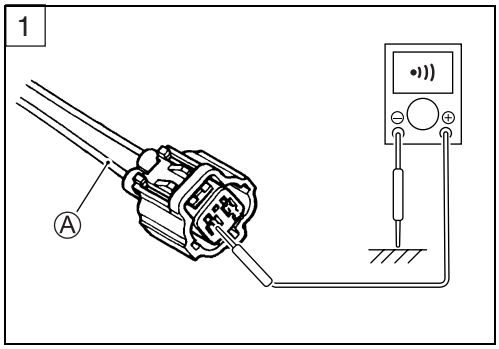

6) Connect the ECT sensor coupler and turn the ignition switch ON.
7) Measure the voltage between Bl/W wire Ⓐ and ground.

DATA ECT sensor output voltage: 0.15 – 4.85 V
(⊕ Bl/W – ⊖ Ground)

TOOL 09900-25008: Multi-circuit tester set
09900-25009: Needle pointed probe set

Tester knob indication: Voltage (⎓)

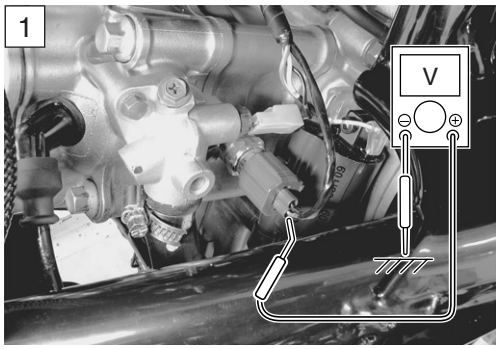

Are the continuity and voltage OK?

YES	Go to Step 2.
NO	• Bl/W wire shorted to ground • If wire is OK, go to Step 2.

8) After repairing the trouble, clear the DTC using SDS tool. (☞4-26)

Step 2

1) Turn the ignition switch OFF.
2) Disconnect the ECT sensor coupler.
3) Measure the ECT sensor resistance.

DATA ECT sensor resistance: Approx. 2.45 kΩ at 20 °C (Terminal – Terminal)

TOOL 09900-25008: Multi-circuit tester set

Tester knob indication: Resistance (Ω)

Refer to page 7-10 for details.

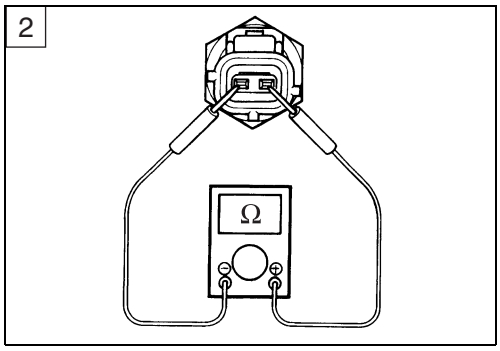

Is the resistance OK?

YES	• W/Bl or B wire open or shorted to ground, or poor ⑯ or ⑳ connection. • If wire and connection are OK, intermittent trouble or faulty ECM. • Recheck each terminal and wire harness for open circuit and poor connection. • Replace the ECM with a known good one, and inspect it again.
NO	Replace the ECT sensor with a new one.

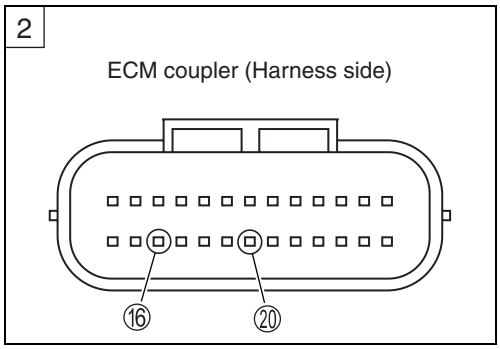

CAUTION

When using the multi-circuit tester, do not strongly touch the terminal of the ECM coupler with a needle pointed tester probe to prevent the terminal damage or terminal bend.

4) After repairing the trouble, clear the DTC using SDS tool. (☞4-26)

DATA ECT sensor specification

Engine Coolant Temp	Resistance
20 °C	Approx. 2.45 kΩ
50 °C	Approx. 0.811 kΩ
80 °C	Approx. 0.318 kΩ
110 °C	Approx. 0.142 kΩ

“23” (P1651-H/L) TO SENSOR CIRCUIT MALFUNCTION

DETECTED CONDITION			POSSIBLE CAUSE
23		The sensor voltage should be the following for 2 sec. and more, after ignition switch is turned ON. 0.2 V ≦ Sensor voltage < 4.7 V	• TO sensor circuit open or short • TO sensor malfunction • ECM malfunction
P1651	H	Sensor voltage is higher than specified value.	• TO sensor circuit shorted to VCC or ground circuit open
	L	Sensor voltage is lower than specified value.	• TO sensor circuit open or shorted to ground or VCC circuit open

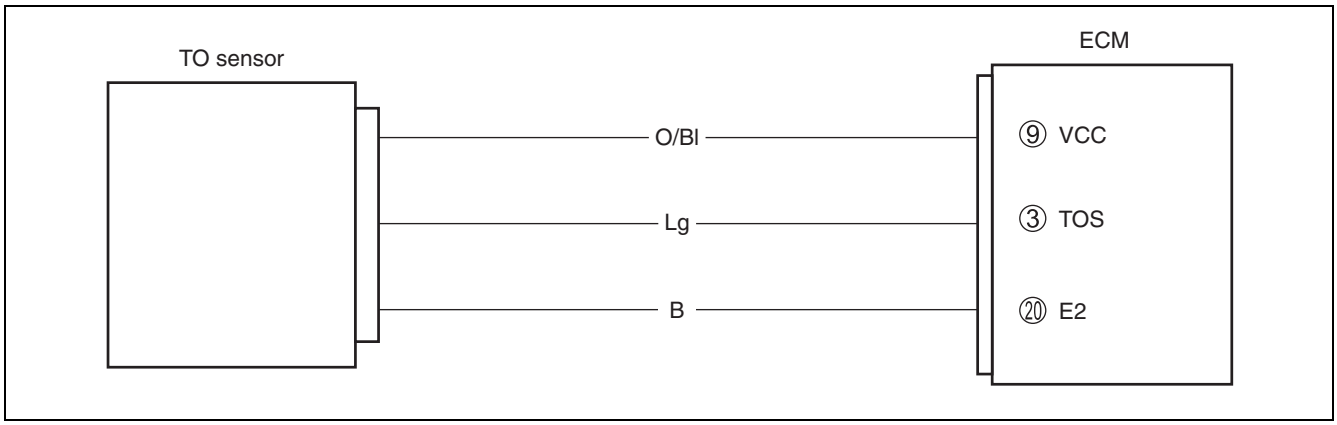

INSPECTION

Step 1 (When indicating 23:)

1) Turn the ignition switch OFF.
2) Remove the front leg shield. (☞8-6)
3) Check the TO sensor coupler ① for loose or poor contacts.
   If OK, then measure the TO sensor resistance.
4) Disconnect the TO sensor coupler.

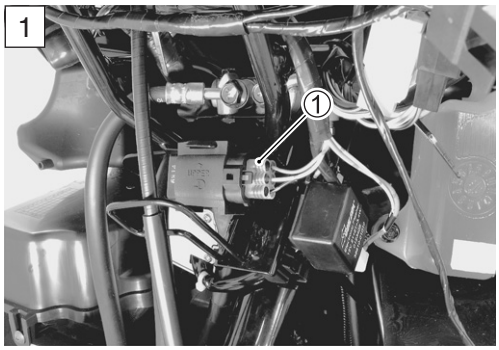

5) Measure the resistance between terminal Ⓐ and terminal Ⓒ.

DATA TO sensor resistance: 16.5 – 22.3 kΩ
(Terminal Ⓐ – Terminal Ⓒ)

TOOL 09900-25008: Multi-circuit tester set

Tester knob indication: Resistance (Ω)

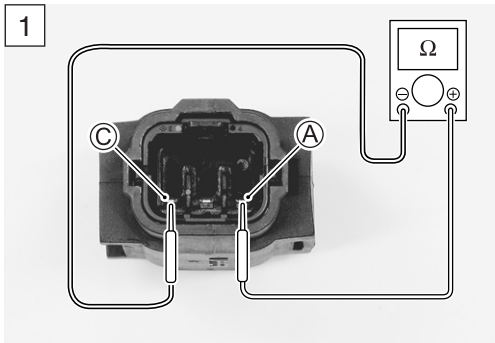

Is the resistance OK?

YES	Go to Step 2.
NO	Replace the TO sensor with a new one.

Step 1 (When indicating P1651-H:)

1) Turn the ignition switch OFF.
2) Remove the front leg shield. (☞8-6)
3) Check the TO sensor coupler ① for loose or poor contacts.
   If OK, then check the TO sensor lead wire continuity.

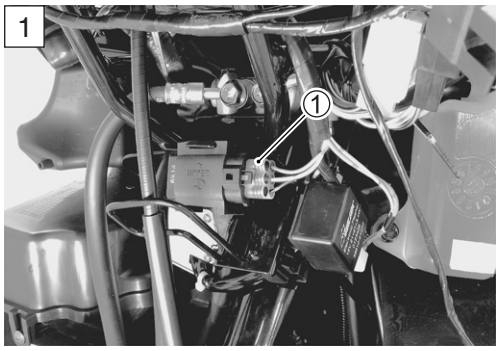

4) Disconnect the TO sensor coupler.
5) Check the continuity between O/Bl wire Ⓐ and Lg wire Ⓑ.
   If the sound is not heard from the tester, the circuit condition is OK.

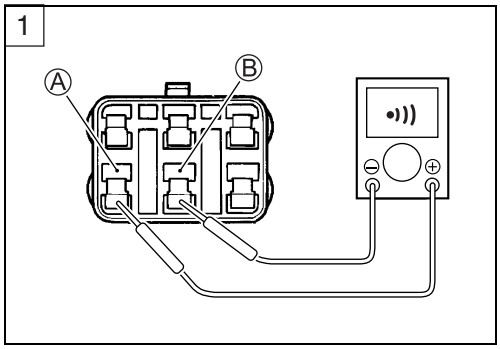

6) Disconnect the ECM coupler.
7) Check the continuity between Lg wire Ⓑ and terminal ③.
8) Also, check the continuity between B wire Ⓒ and terminal ⑳.

DATA TOS lead wire continuity: Continuity (•)))

TOOL 09900-25008: Multi-circuit tester set
09900-25009: Needle pointed probe set

Tester knob indication: Continuity test (•)))

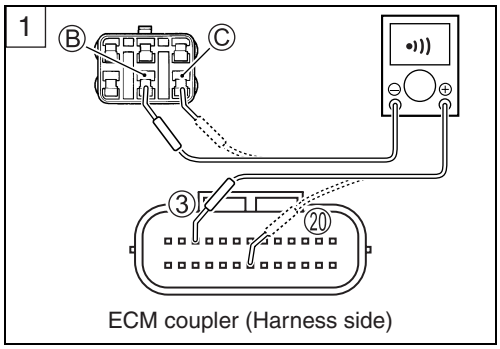

CAUTION

When using the multi-circuit tester, do not strongly touch the terminal of the ECM coupler with a needle pointed tester probe to prevent the terminal damage or terminal bend.

Is the continuity OK?

YES	Go to Step 2.
NO	Lg wire shorted to VCC, or B wire open.

9) After repairing the trouble, clear the DTC using SDS tool. (☞4-26)

Step 1 (When indicating P1651-L:)

1) Turn the ignition switch OFF.
2) Remove the front leg shield. (☞8-6)
3) Check the TO sensor coupler ① for loose or poor contacts. If OK, then check the TO sensor lead wire continuity.

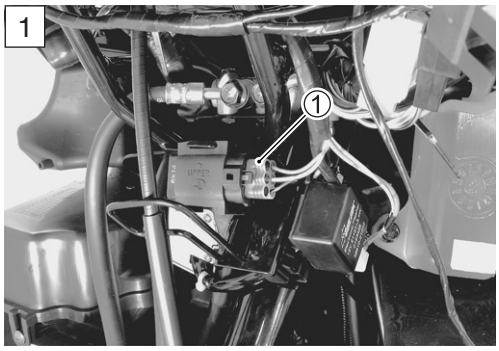

4) Disconnect the TO sensor coupler.
5) Check the continuity between Lg wire Ⓑ and ground.
6) Also, check the continuity between Lg wire Ⓑ and B wire Ⓒ. If the sound is not heard from the tester, the circuit condition is OK.

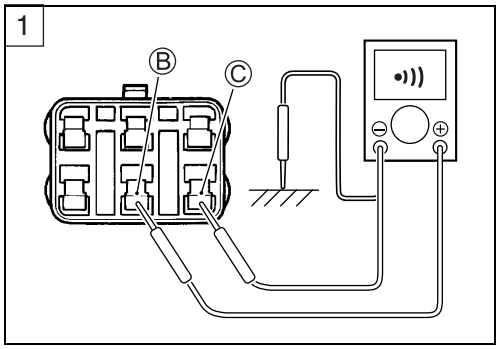

7) Disconnect the ECM coupler.
8) Check the continuity between O/Bl wire Ⓐ and terminal ⑨.
9) Also, then check the continuity between Lg wire Ⓑ and terminal ③.

DATA TO sensor lead wire continuity: Continuity (•)))

TOOL 09900-25008: Multi-circuit tester set
09900-25009: Needle pointed probe set

Tester knob indication: Continuity test (•)))

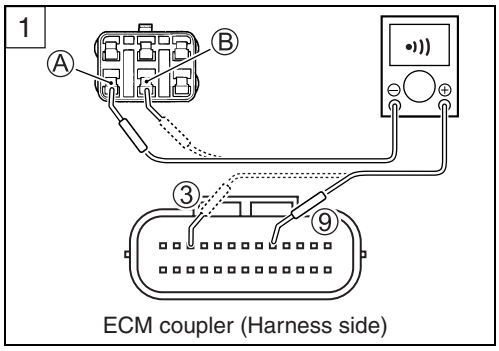

ECM coupler (Harness side)

CAUTION

When using the multi-circuit tester, do not strongly touch the terminal of the ECM coupler with a needle pointed tester probe to prevent the terminal damage or terminal bend.

Is the continuity OK?

YES	Go to Step 2.
NO	O/Bl or Lg wire open, or Lg wire shorted to ground.

10) After repairing the trouble, clear the DTC using SDS tool. (☞4-26)

Step 2

1) Connect the TO sensor coupler and ECM coupler.
2) Insert the needle pointed probes to the lead wire coupler.
3) Turn the ignition switch ON.
4) Measure the voltage between Lg and B wires.

DATA TO sensor voltage (Normal): 0.4 – 1.4 V
(⊕ Lg – ⊖ B)

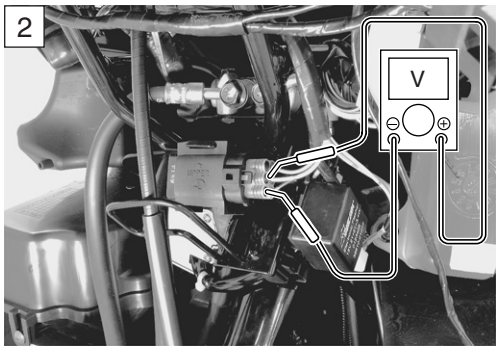

Also, measure the voltage as the motorcycle is leaned.

5) Dismount the TO sensor from its bracket and measure the voltage when it is leaned 65°, left and right.

DATA TO sensor voltage (Leaning): 3.7 – 4.4 V
(⊕ Lg – ⊖ B)

TOOL 09900-25008: Multi-circuit tester set
09900-25009: Needle pointed probe set

Tester knob indication: Voltage (⎓)

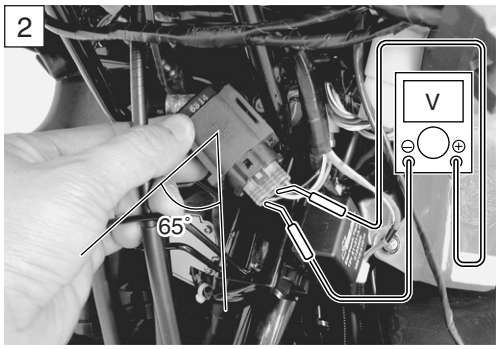

Is the voltage OK?

YES	• O/Bl, Lg or B wire open or shorted to ground, or poor ⑨, ③ or ⑳ connection • If wire and connection are OK, intermittent trouble or faulty ECM. • Recheck each terminal and wire harness for open circuit and poor connection. • Replace the ECM with a known good one, and inspect it again.
NO	• Loose or poor contacts on the ECM coupler • Open or short circuit • Replace the TO sensor with a new one.

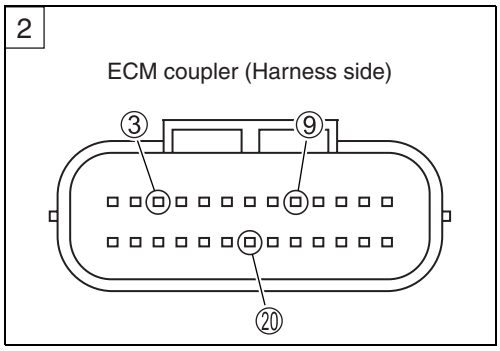

CAUTION

When using the multi-circuit tester, do not strongly touch the terminal of the ECM coupler with a needle pointed tester probe to prevent the terminal damage or terminal bend.

6) After repairing the trouble, clear the DTC using SDS tool. (☞4-26)

"24" (P0351) IGNITION SYSTEM MALFUNCTION

*** Refer to the IGNITION SYSTEM for details. (☞9-22)**

“32” (P0201) FUEL INJECTOR CIRCUIT MALFUNCTION

DETECTED CONDITION	POSSIBLE CAUSE
CKP signal is produced but fuel injector signal is interrupted by 4 times or more continuously.	• Injector circuit open or short • Injector malfunction • ECM malfunction

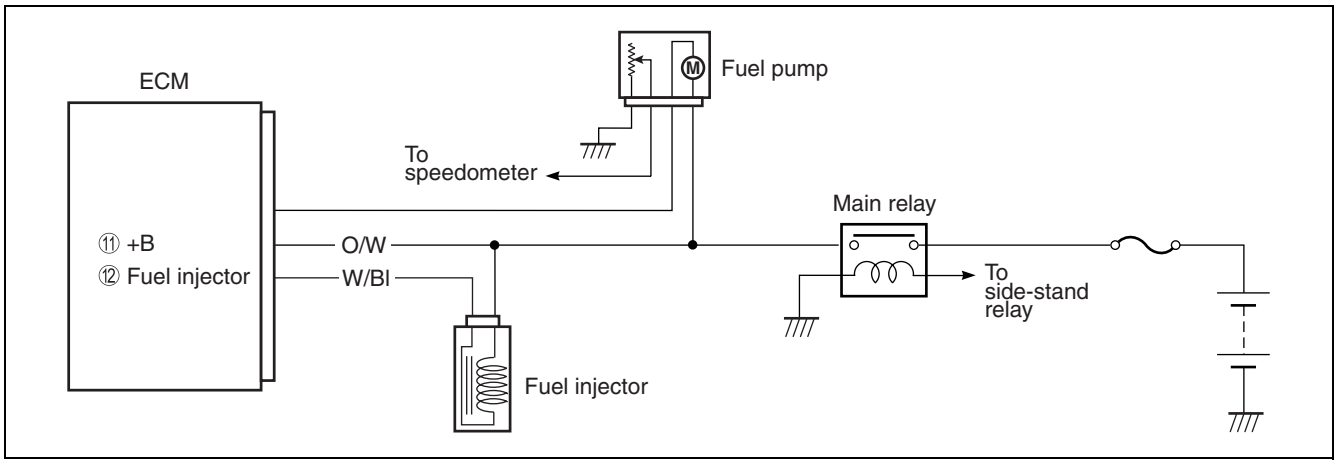

INSPECTION

Step 1

1) Turn the ignition switch OFF.
2) Remove the trunk box. (☞8-11)
3) Check the injector coupler ① for loose or poor contacts.
   If OK, then measure the injector resistance.

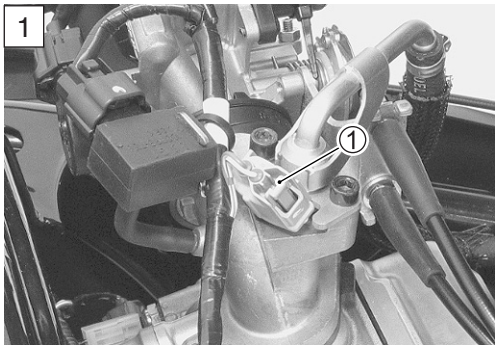

4) Disconnect the injector coupler and measure the resistance between terminals.

DATA Injector resistance: Approx. 12 Ω at 21 °C (Terminal – Terminal)

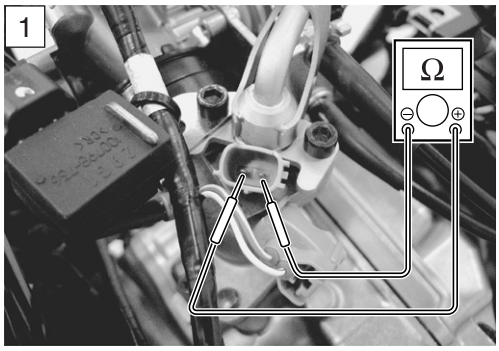

5) If OK, then check the continuity between each terminal and ground.

DATA Injector continuity: ∞ Ω (Infinity)

TOOL 09900-25008: Multi-circuit tester set

Tester knob indication: Resistance (Ω)

Are the resistance and continuity OK?

YES	Go to Step 2.
NO	Replace the injector with a new one. (☞5-10)

6) After repairing the trouble, clear the DTC using SDS tool. (☞4-26)

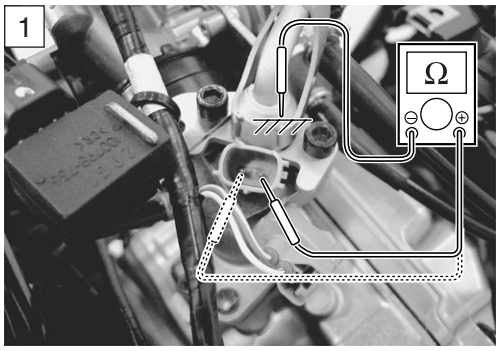

Step 2

1) Turn the ignition switch ON.
2) Measure the injector voltage between O/W wire and ground.

DATA Injector voltage: Battery voltage
(⊕ O/W – ⊖ Ground)

NOTE:
Injector voltage can be detected only 3 for seconds after ignition switch is turned ON.

TOOL 09900-25008: Multi-circuit tester set

Tester knob indication: Voltage (⎓)

Is the voltage OK?

YES	• W/Bl wire open or shorted to ground, or poor ⑫ connection • If wire and connection is OK, intermittent trouble or faulty ECM. • Recheck each terminal and wire harness for open circuit and poor connection. • Replace the ECM with a known good one, and inspect it again.
NO	Open circuit in the O/W wire

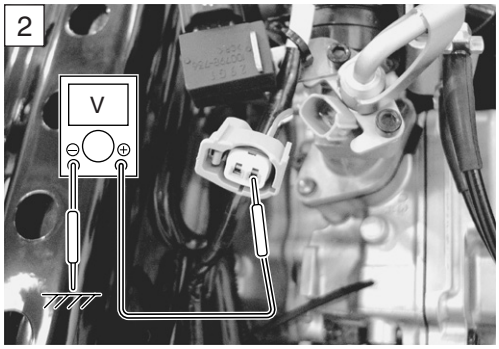

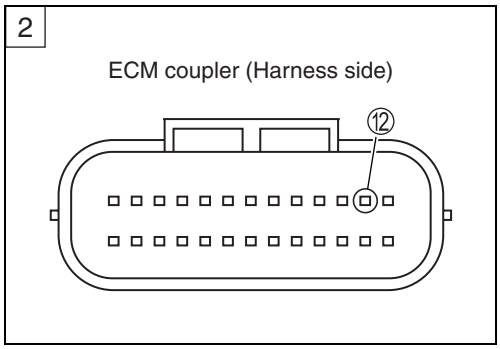

CAUTION

When using the multi-circuit tester, do not strongly touch the terminal of the ECM coupler with a needle pointed tester probe to prevent the terminal damage or terminal bend.

3) After repairing the trouble, clear the DTC using SDS tool. (☞4-26)

“40” (P0505 or P0506 and P0507) ISC VALVE CIRCUIT MALFUNCTION

DETECTED CONDITION		POSSIBLE CAUSE
40 (P0505)	The circuit voltage of motor drive is unusual. Idle speed is higher than the normal condition.	• ISC valve circuit open or shorted to ground • Power source circuit open • ISC valve is fixed to full open • Disconnected ISC valve hose • Air passage clogged • ISC valve is fixed • ISC valve pre-set position is incorrect • Disconnected ISC valve hose • ISC valve is fixed • ISC valve pre-set position is incorrect
40 (P0506)	Idle speed is lower than the desired idle speed.	
40 (P0507)	Idle speed is higher than the desired idle speed.	

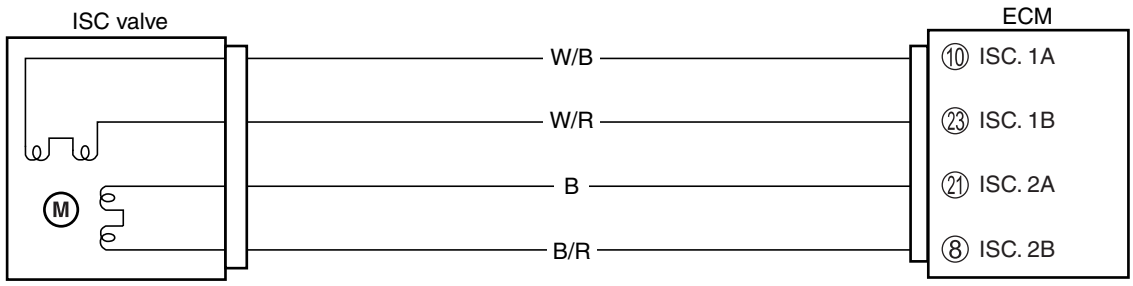

CAUTION

Be careful not to disconnect the ISC valve coupler at least 5 seconds after ignition switch is turned to OFF. If the ECM coupler or ISC valve coupler is disconnected within 5 seconds after ignition switch is turned to OFF, there is a possibility of an unusual valve position being written in ECM and causing an error of ISC valve operation.

INSPECTION

Step 1

1) Turn the ignition switch OFF.
2) Remove the trunk box. (☞8-11)
3) Check the ISC valve coupler ① for loose or poor contacts.
   If OK, then check the ISC valve lead wire continuity.

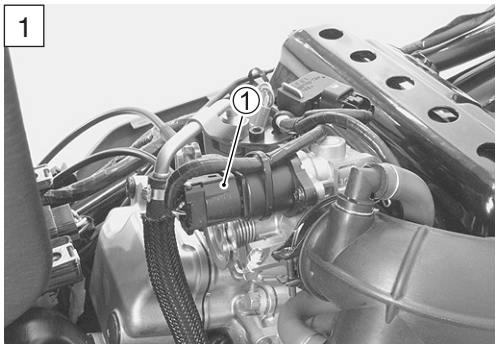

4) Disconnect the ISC valve coupler and ECM coupler.
5) Check the continuity between terminals Ⓐ and ⑩, terminals Ⓑ and ㉓, terminals Ⓒ and ㉑, terminals Ⓓ and ⑧.

CAUTION

When using the multi-circuit tester, do not strongly touch the terminal of the ECM coupler with a needle pointed tester probe to prevent the terminal damage or terminal bend.

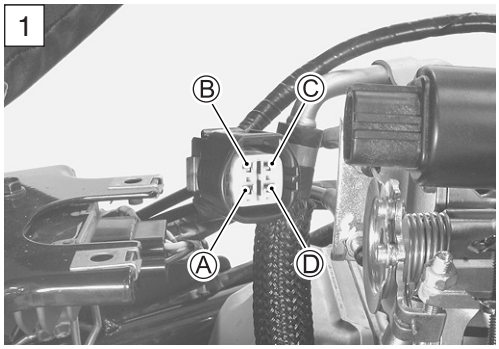

DATA ISC valve continuity: Continuity (•)))

TOOL 09900-25008: Multi-circuit tester set
09900-25009: Needle pointed probe set

Tester knob indication: Continuity test (•)))

Is the continuity OK?

YES	Go to Step 2.
NO	W/B, W/R, B or B/R wire open.

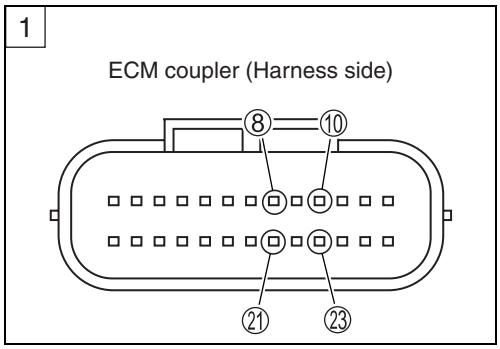

6) After repairing the trouble, clear the DTC using SDS tool. (☞4-26)

Step 2

1) Measure the resistance between terminals Ⓐ and Ⓑ, terminals Ⓒ and Ⓓ.

DATA ISC valve resistance: 30 ± 3 Ω
(Terminal Ⓐ – Terminal Ⓑ)
(Terminal Ⓒ – Terminal Ⓓ)

Is the resistance OK?

YES	If wire is OK, intermittent trouble or faulty ECM.
NO	Replace the throttle body with a new one.

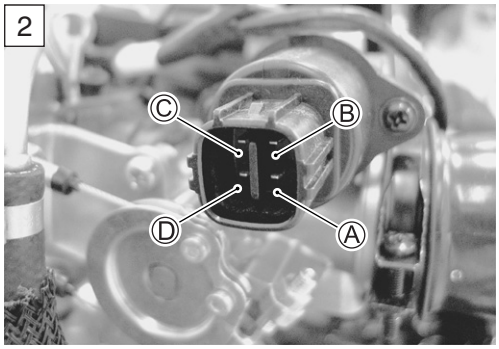

2) After repairing the trouble, clear the DTC using SDS tool. (☞4-26)

ACTIVE CONTROL INSPECTION (ISC RPM CONTROL)

Check 1

1) Set up the SDS tool. (Refer to the SDS operation manual for further details.)
2) Check that the engine is running.
3) Make sure that the engine coolant temperature on data monitor is indicated 70°C or more.
4) Click the “Active control”.
5) Click the “ISC rpm control” ①.

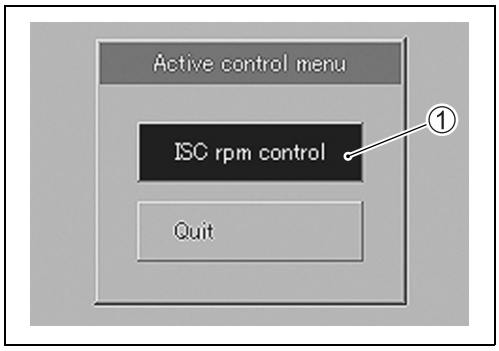

6) Check that the “Spec” ② is idle speed 1 800 ± 100 rpm.
7) Check that the “Desired idle speed” ③ is within the specified idle rpm.

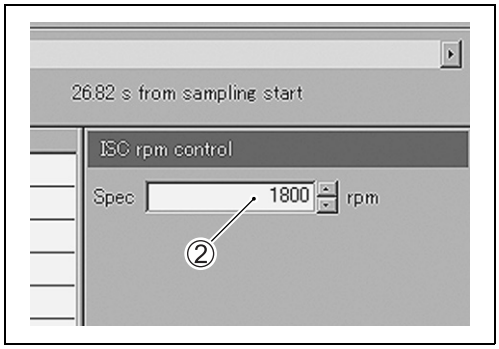

Item	Value	Unit
Engine speed	1777	rpm
Throttle position	17.6	°
Manifold absolute pressure 1	84.6	kPa
Engine coolant / oil temperature	74.8	°C
Battery voltage	20.0	V
Desired idle speed	③ 1800	rpm
ISC valve position	45	step
Ignition switch signal	On	
Starter signal	Off	

Check 2

1) Click the button ① and decrease the “Spec” ② to 1 500 rpm slowly.
2) Check that the “Desired idle speed” ③ is nearly equal to the “Spec” ②. At the same time, check that the number of steps in the ISC valve position decreases.
3) Click the button ④ and increase the “Spec” ② slowly.
4) Check that the “Desired idle speed” ③ is nearly equal to the “Spec” ②. Also, check that the number of steps ⑤ in the ISC valve position increases.

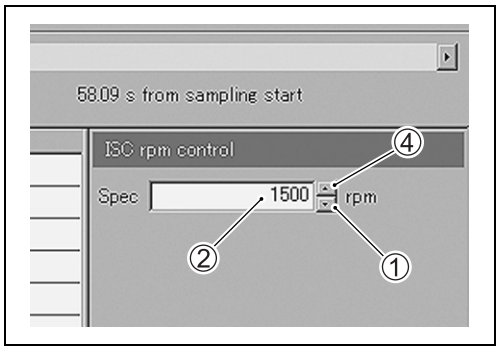

Item	Value	Unit
Engine speed	1475	rpm
Throttle position	17.6	°
Manifold absolute pressure 1	79.4	kPa
Engine coolant / oil temperature	77.3	°C
Battery voltage	20.0	V
Desired idle speed	③ 1500	rpm
ISC valve position	⑤ 31	step
Ignition switch signal	On	
Starter signal	Off	

Check 3

1) Click the button ① and increase the “Spec” ② to 1 650 rpm slowly.
2) Check that the “Desired idle speed” ③ is nearly equal to the “Spec” ②. Also, check that the number of steps ④ in the ISC valve position increases.

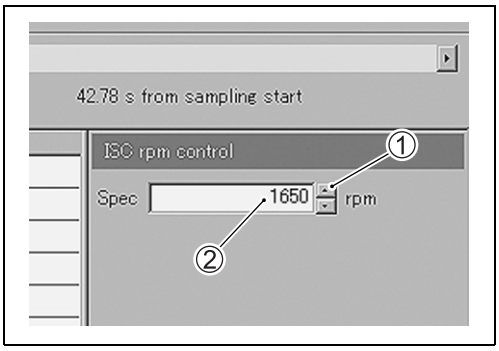

Item	Value	Unit
Engine speed	1611	rpm
Throttle position	17.6	°
Manifold absolute pressure 1	76.8	kPa
Engine coolant / oil temperature	79.8	℃
Battery voltage	20.0	V
Desired idle speed	③ 1650	rpm
ISC valve position	④ 35	step
Ignition switch signal	On	
Starter signal	Off	

Check 4

1) Increase the “Spec” ① to 1 900 rpm.
2) Check that the “Desired idle speed” ② is approx. 1 900 rpm.
3) Check that the “Engine speed” ③ is close to 1 900 rpm.

NOTE:
Be careful not to increase the “Spec” to more than 1 950 rpm, or the “Engine speed” may reach the upper limit.

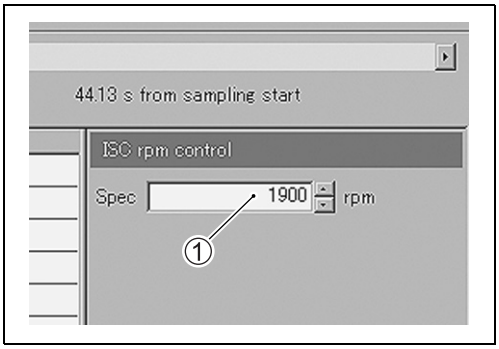

Item	Value	Unit
Engine speed	③ 1930	rpm
Throttle position	17.6	°
Manifold absolute pressure 1	68.9	kPa
Engine coolant / oil temperature	79.2	℃
Battery voltage	20.0	V
Desired idle speed	② 1900	rpm
ISC valve position	53	step
Ignition switch signal	On	
Starter signal	Off	

If the ISC valve does not function properly, inspect the ISC valve. (☞4-53) or replace the throttle body assembly (☞5-10).

“41” (P0230-H/L) FP CIRCUIT MALFUNCTION

DETECTED CONDITION			POSSIBLE CAUSE
41		No voltage is applied to fuel pump although main relay is turned ON, or voltage is applied to fuel pump, although main relay is turned OFF.	• Main relay circuit open or short • Main relay malfunction • ECM malfunction
P0230	H	Voltage is applied to fuel pump although main relay is turned OFF.	• Main relay switch circuit shorted to power source • Faulty main relay (switch side)
	L	No voltage is applied to fuel pump although main relay is turned ON.	• Main relay coil circuit open or short • Faulty main relay (coil side)

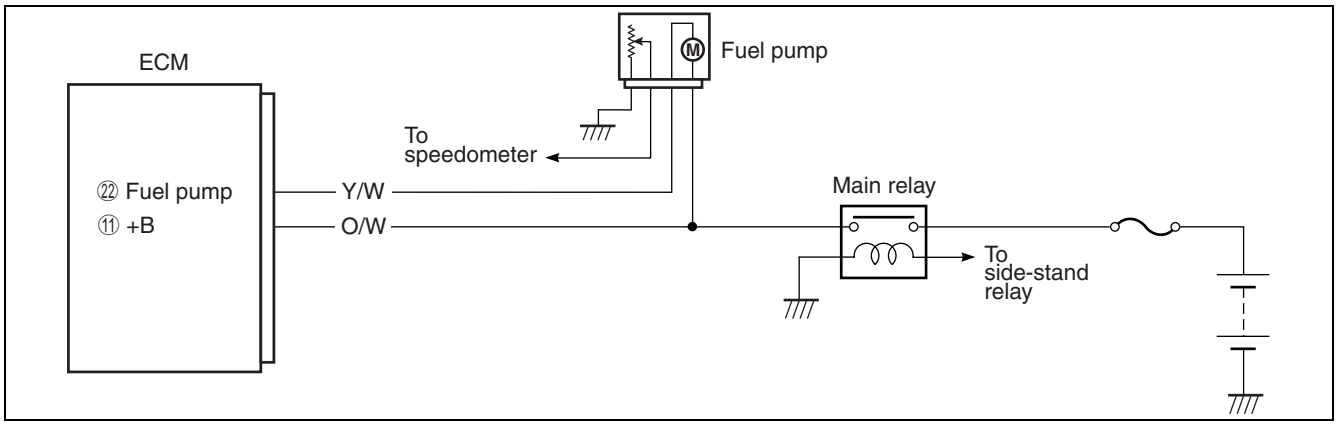

INSPECTION

Step 1 (When indicating 41:)

1) Turn the ignition switch OFF.
2) Remove the front frame cover. (☞8-8)
3) Check the fuel pump coupler ① for loose or poor contacts.
   If OK, then check the main relay. (☞9-21)

Is the main relay OK?

YES	• O/W or Y/W wire open or short or poor ㉒ connection • If wire and connection are OK, intermittent trouble or faulty ECM. • Recheck each terminal and wire harness for open circuit and poor connection. • Replace the ECM with a known good one, and inspect it again.
NO	Replace the main relay with a new one.

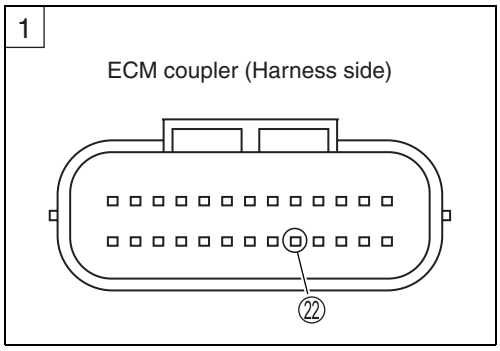

CAUTION

When using the multi-circuit tester, do not strongly touch the terminal of the ECM coupler with a needle pointed tester probe to prevent the terminal damage or terminal bend.

4) After repairing the trouble, clear the DTC using SDS tool. (☞4-26)

Step 1 (When indicating P0230-H:)

1) Turn the ignition switch OFF.
2) Remove the front frame cover. (☞8-8)
3) Check the fuel pump coupler for loose or poor contacts.
   If OK, then check the main relay. (☞9-21)

Is the main relay OK?

YES	• O/W wire shorted to power source • If wire and connection are OK, intermittent trouble or faulty ECM. • Recheck each terminal and wire harness for open circuit and poor connection. • Replace the ECM with a known good one, and inspect it again.
NO	Replace the main relay with a new one.

4) After repairing the trouble, clear the DTC using SDS tool. (☞4-26)

Step 1 (When indicating P0230-L:)

1) Turn the ignition switch OFF.
2) Remove the front frame cover. (☞8-8)
3) Check the fuel pump coupler for loose or poor contacts.
   If OK, then check the main relay. (☞9-21)

Is the main relay OK?

YES	• O/W or Y/W wire open or short or poor ㉒ connection • If wire and connection are OK, intermittent trouble or faulty ECM. • Recheck each terminal and wire harness for open circuit and poor connection. • Replace the ECM with a known good one, and inspect it again.
NO	Replace the main relay with a new one.

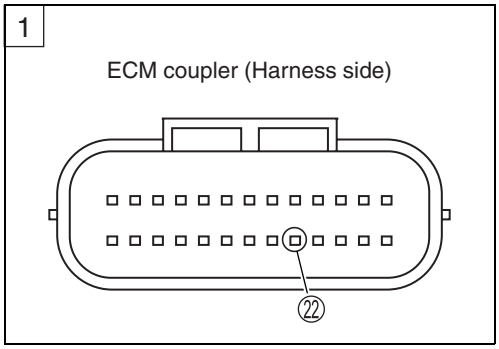

4) After repairing the trouble, clear the DTC using SDS tool. (☞4-26)

“42” (P01650) IG SWITCH CIRCUIT MALFUNCTION

DETECTED CONDITION	POSSIBLE CAUSE
Ignition switch signal is not input to the ECM.	• Ignition system circuit open or short • ECM malfunction

INSPECTION

*** Refer to the IGNITION SWITCH INSPECTION for details. (☞9-36)**

"44" (P0130) HO2 SENSOR (HO2S) CIRCUIT MALFUNCTION

DETECTED CONDITION		POSSIBLE CAUSE
44 (P0130)	HO2 sensor output voltage is not input to ECM during engine operation and running condition.	• HO2 sensor circuit open or shorted to ground. • Fuel system malfunction. • ECM malfunction.

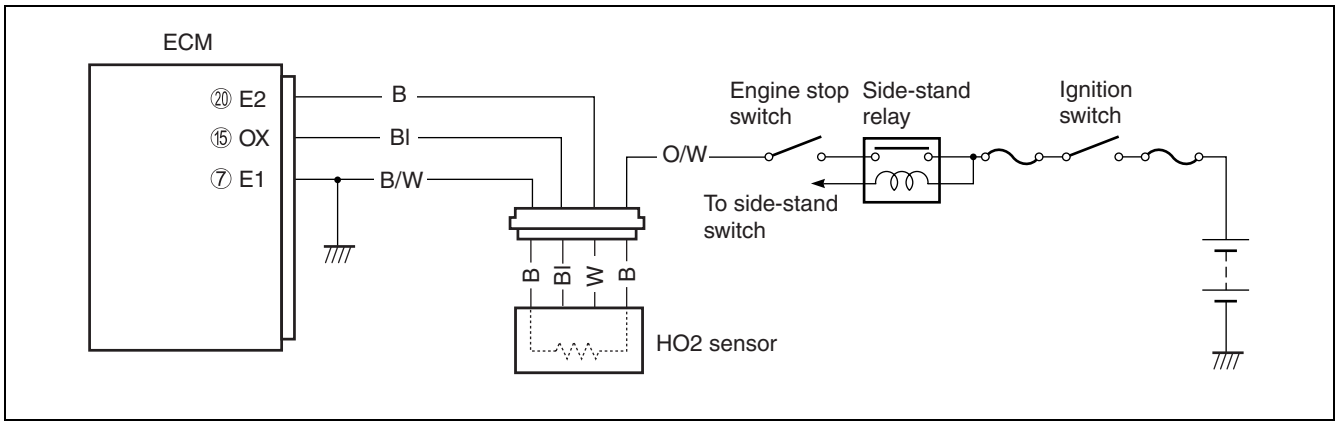

INSPECTION

Step 1

1) Turn the ignition switch OFF.
2) Remove the right side leg shield. (☞8-8)
3) Check the HO2 sensor coupler ① for loose or poor contacts. If OK, then check the HO2 sensor lead wire continuity.

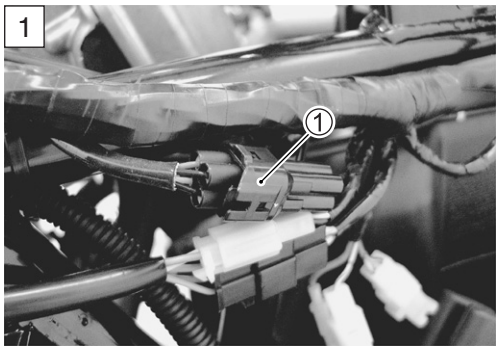

4) Disconnect the HO2 sensor coupler
5) Check the continuity between Bl wire (harness side) and ground.
6) Also, check the continuity between Bl wire (harness side) and B wire (harness side). If the sound is not heard from the tester, the circuit condition is OK.

TOOL 09900-25008: Multi-circuit tester set

Tester knob indication: Continuity test (•)))

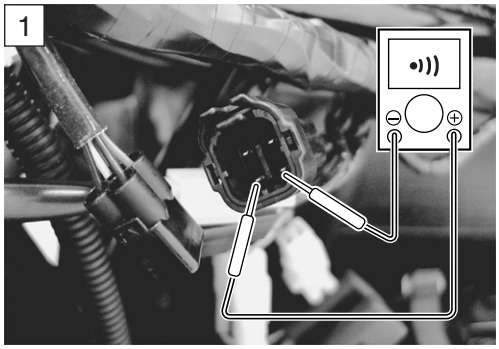

7) Disconnect the ECM coupler.
8) Check the continuity between Bl wire (harness side) and terminal ⑮.
9) Also, check the continuity between B wire (harness side) and terminal ⑳.

DATA HO2S lead wire continuity: Continuity (•)))

TOOL 09900-25008: Multi-circuit tester set
09900-25009: Needle pointed probe set

Tester knob indication: Continuity test (•)))

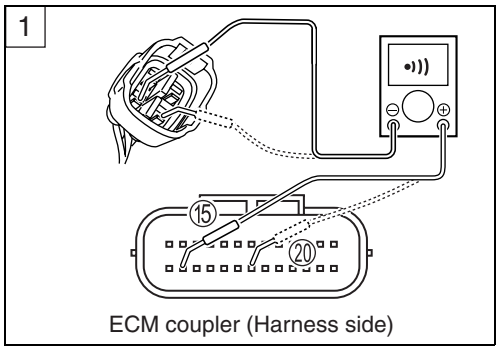

ECM coupler (Harness side)

CAUTION

When using the multi-circuit tester, do not strongly touch the terminal of the ECM coupler with a needle pointed tester probe to prevent the terminal damage or terminal bend.

Is the continuity OK?

YES	Go to Step 2.
NO	Bl wire shorted to ground, or Bl or B wire open.

10) After repairing the trouble, clear the DTC using SDS tool. (☞4-26)

Step 2
1) Connect the ECM and HO2 sensor couplers.
2) Warm up the engine enough.
3) Measure the HO2 sensor output voltage between Bl wire (harness side) and B wire (harness side), when idling condition.

DATA HO2 sensor output voltage at idle speed:
0 – 1.0 V (⊕ Bl – ⊖ B)

4) Measure the HO2 sensor output voltage while holding the engine speed at 3 000 r/min.

DATA HO2 sensor output voltage at 3 000 r/min:
0 – 1.0 V (⊕ Bl – ⊖ B)

TOOL 09900-25008: Multi-circuit tester set
09900-25009: Needle pointed probe set

Tester knob indication: Voltage (⎓)

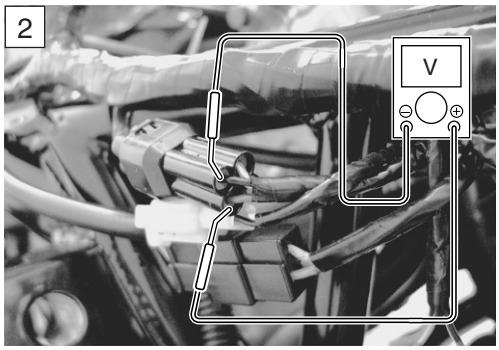

Is the voltage OK?

YES	• Bl wire or B wire open or shorted to ground, or poor ⑮ or ⑳ connection. • If wire and connection are OK, intermittent trouble or faulty ECM. • Recheck each terminal and wire harness for open circuit and poor connection. • Replace the ECM with a known good one, and inspect it again.
NO	Replace the HO2 sensor with a new one.

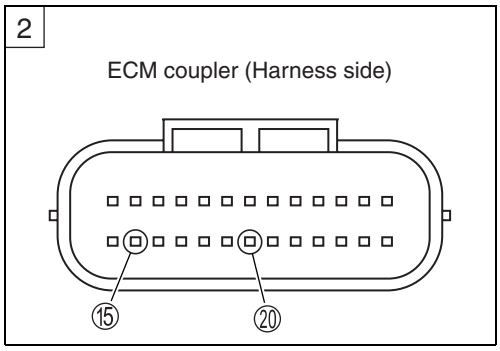

CAUTION

When using the multi-circuit tester, do not strongly touch the terminal of the ECM coupler with a needle pointed tester probe to prevent the terminal damage or terminal bend.

5) After repairing the trouble, clear the DTC using SDS tool. (☞4-26)

SENSORS

CKP SENSOR INSPECTION

The crankshaft position sensor is installed behind the generator cover. (☞4-30)

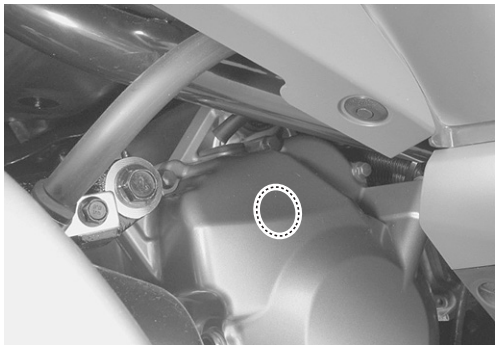

CKP SENSOR REMOVAL AND INSTALLATION

- Remove the generator cover. (☞3-14)
- Install the generator cover in the reverse order of removal.

IAP SENSOR INSPECTION

The intake air pressure sensor is installed on the throttle body. (☞4-33)

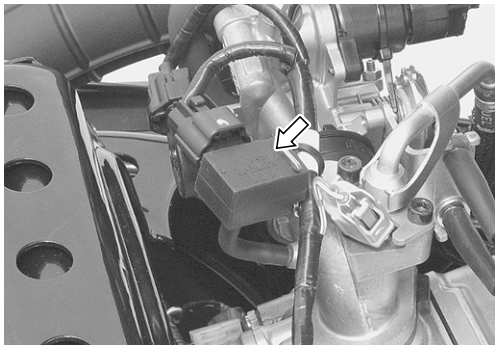

IAP SENSOR REMOVAL AND INSTALLATION

- Remove the trunk box. (☞8-11)
- Remove the IAP sensor.
- Install the IAP sensor in the reverse order of removal.

TP SENSOR INSPECTION

The throttle position sensor is installed on the throttle body. (☞4-38)

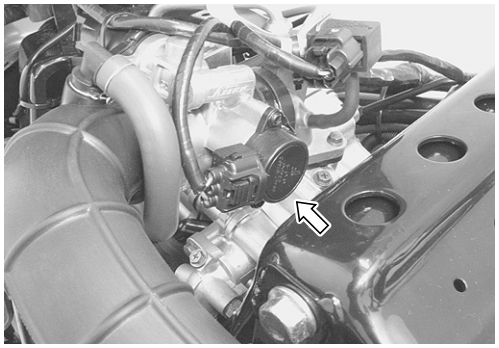

TP SENSOR REMOVAL AND INSTALLATION

- Remove the trunk box. (☞8-11)
- Remove the TP sensor. (☞5-11)
- Install the TP sensor in the reverse order of removal.

ECT SENSOR INSPECTION

The engine coolant temperature sensor is installed at the cylinder head. (☞4-43)

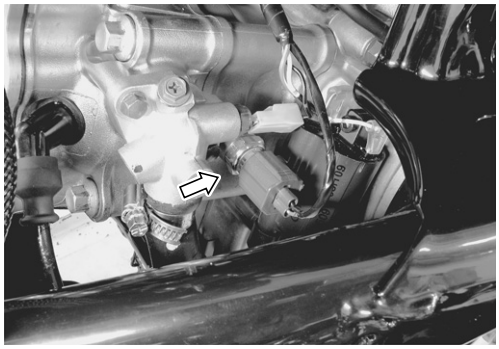

ECT SENSOR REMOVAL AND INSTALLATION

- Remove the ECT sensor. (☞7-10)
- Install the ECT sensor in the reverse order of removal.

ECT sensor: 18 N·m (1.8 kgf-m)

TO SENSOR INSPECTION
TO SENSOR REMOVAL AND INSTALLATION

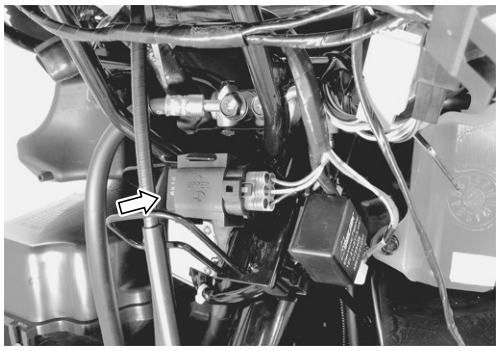

The tip-over sensor is located inside the front leg shield.
(☞4-47)

- Remove the TO sensor.
- Install the TO sensor in the reverse order of removal.

NOTE:
When installing the TO sensor, the arrow mark must be pointed upward.

HO2 SENSOR INSPECTION

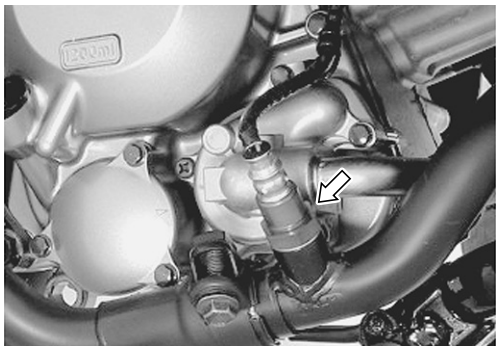

The heated oxygen sensor is installed to the exhaust pipe. (☞4-60)

HO2 SENSOR REMOVAL AND INSTALLATION

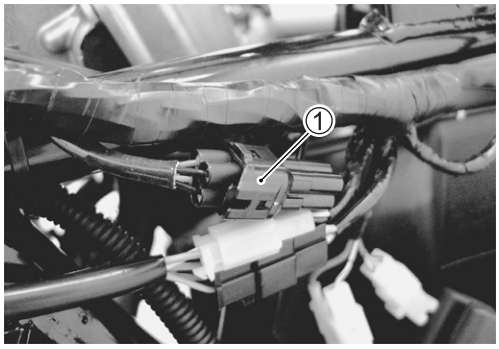

- Remove the right side leg shield. (☞8-8)
- Disconnect the coupler ① and remove the HO2 sensor.

⚠ WARNING

Do not remove the HO2 sensor while it is hot.

CAUTION

Be careful not to expose it to excessive shock.
Do not use an impact wrench while removing or installing the HO2 sensor.
Be careful not to twist or damage the sensor lead wires.

- Installation is in the reverse order of removal.

CAUTION

Do not apply oil or other materials to the sensor air hole.

- Tighten the sensor unit to the specified torque.

HO2 sensor: 48 N·m (4.8 kgf-m)

- Route the HO2 sensor lead wire properly.(☞10-21)

FUEL SYSTEM AND THROTTLE BODY

CONTENTS

⚠ WARNING

Gasoline must be handled carefully in an area well ventilated and away from fire or sparks.

FUEL SYSTEM
CONSTRUCTION

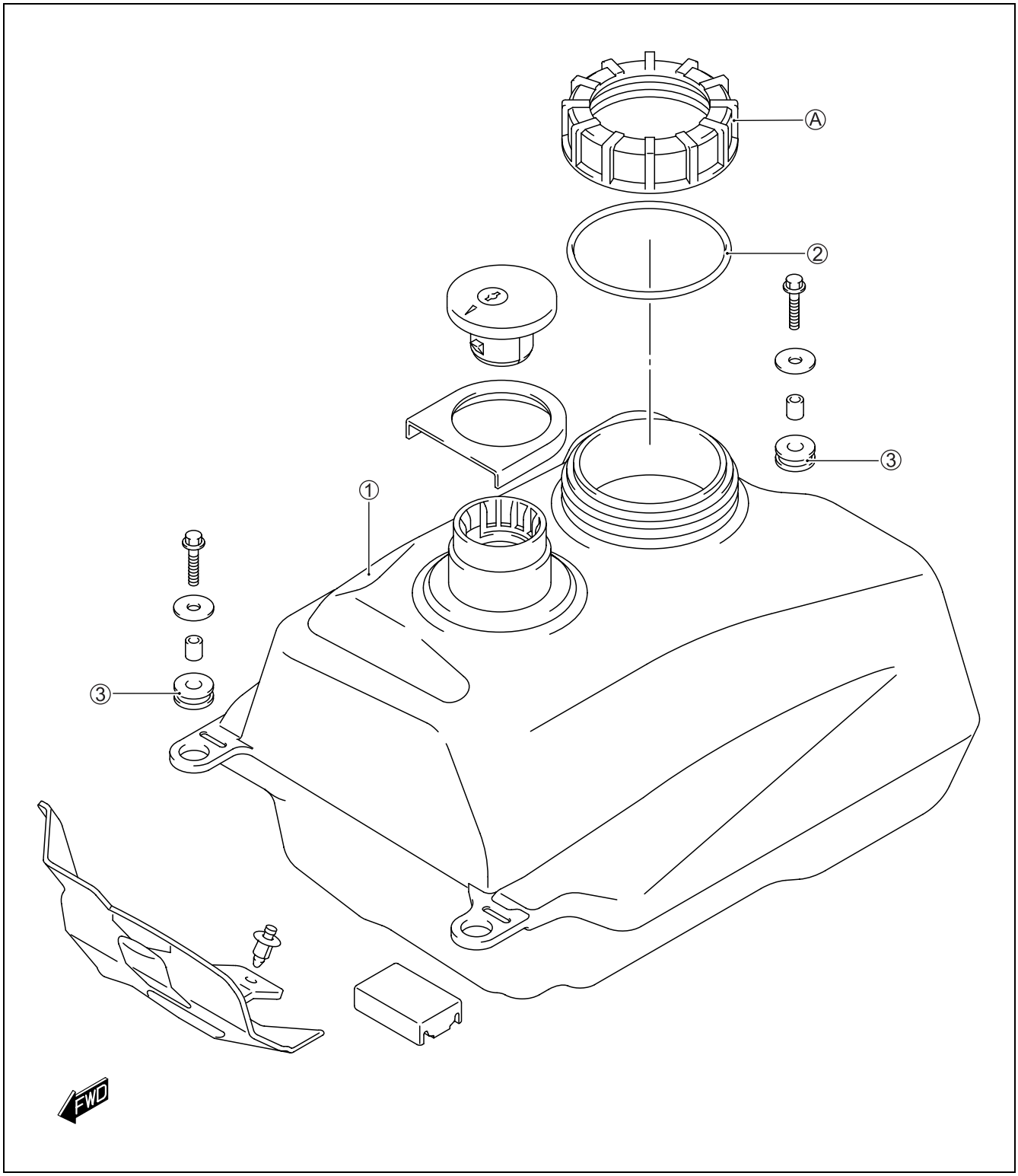

①	Fuel tank	③	Cushion
②	O-ring	Ⓐ	Fuel pump retainer

ITEM	N·m	kgf-m
Ⓐ	35	3.5

REMOVAL AND DISASSEMBLY

- Remove the engine. (☞3-3)
- Remove the footboard. (☞8-12)
- Disconnect the fuel pump/fuel level gauge coupler ①.

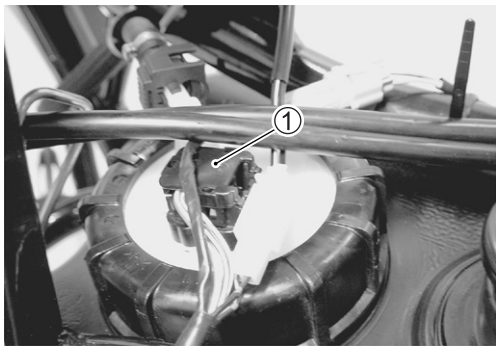

⚠ WARNING

*** Gasoline is highly flammable and explosive.**
*** Keep heat, spark and flame away.**

- Remove the fuel feed hose bracket ②.

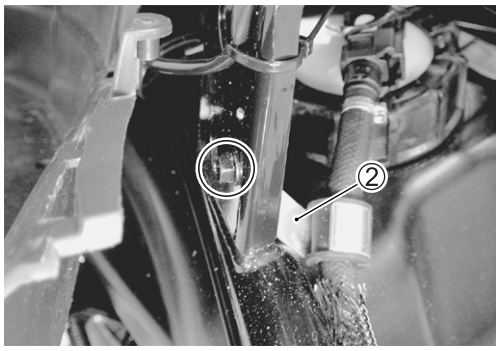

- Remove the fuel tank bolt ③.

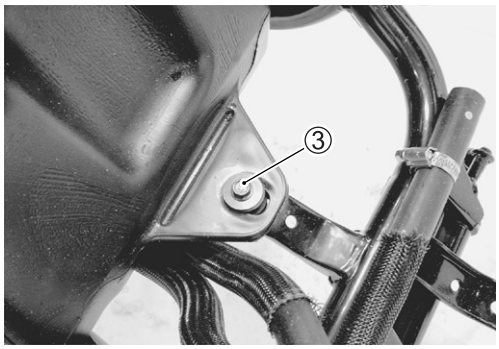

- Remove the fuel tank bolts ④ and ⑤.

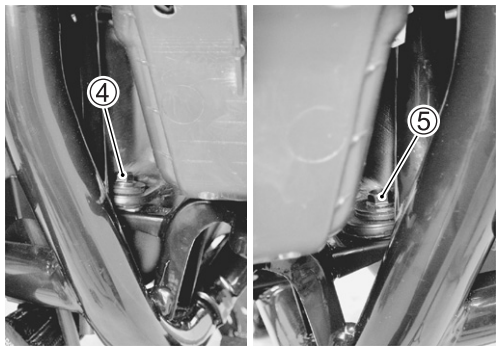

- Remove the fuel tank.

CAUTION

As gasoline leakage may occur in this operation, keep away from fire and sparks.

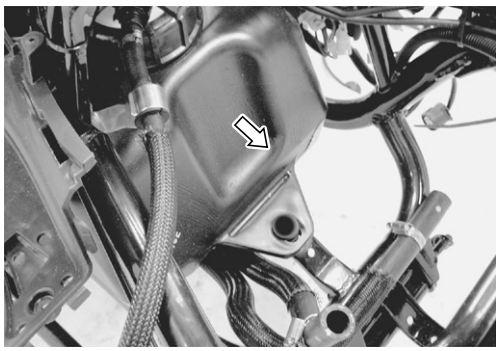

- Remove the fuel feed hose ⑥.

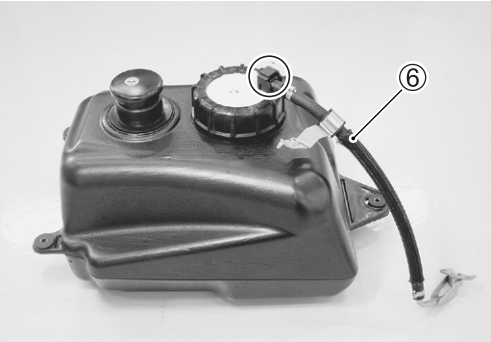

- Loosen the fuel pump retainer using the special tool.

TOOL 09941-51012: Ring lock-nut wrench

- Remove the fuel pump assembly.
- Fuel pump inspection (☞5-7 and 9-29)

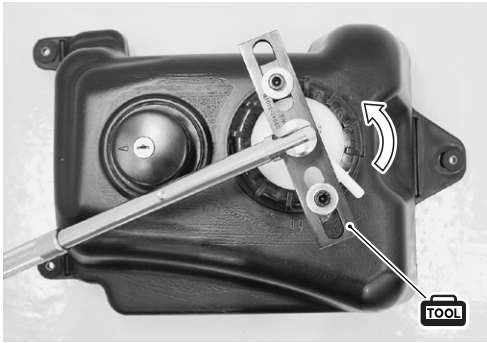

FUEL TANK REASSEMBLY AND INSTALLATION

Reassemble and install the fuel tank in the reverse order of removal and disassembly. Pay attention to the following points:

- Apply thin coat of the engine oil to the O-ring ①.

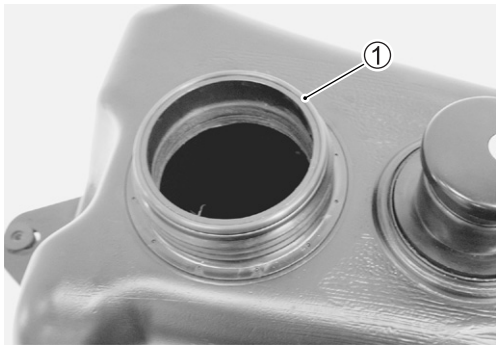

CAUTION

Replace the gasket with a new one.

- Install the fuel pump assembly.
- Align the alignment marks Ⓐ and Ⓑ.

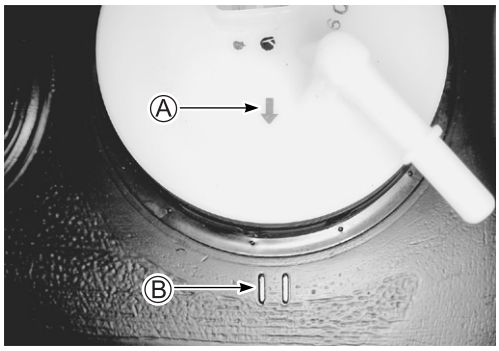

- Tighten the fuel pump retainer using the special tool.

TOOL 09941-51012: Ring lock-nut wrench

Fuel pump retainer: 35 N·m (3.5 kgf-m)

- Install the fuel tank.
- Install the engine. (☞3-7)

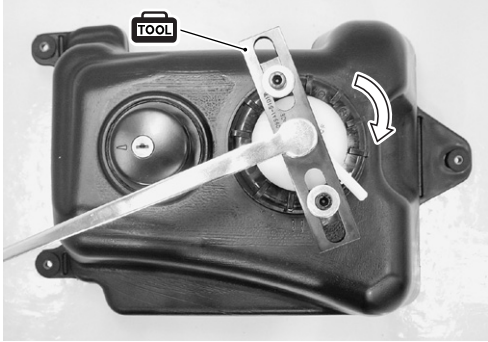

FUEL PRESSURE INSPECTION

- Remove the front frame cover. (☞8-11)
- Place a rag under the fuel feed hose ① and disconnect the fuel feed hose ① from the fuel tank.

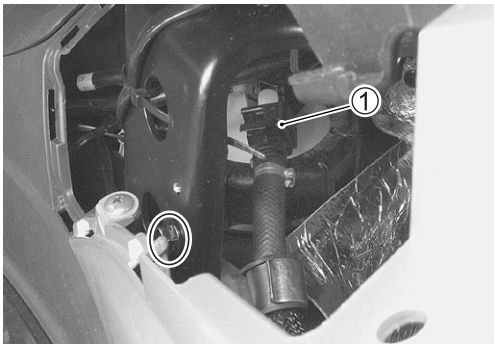

- Install the special tools to the fuel tank.

TOOL **09915-77331: Oil pressure gauge**
09915-74521: Oil pressure gauge hose
09940-40211: Fuel pressure gauge adaptor
09940-40220: Fuel pressure gauge hose attachment

Ⓐ To fuel tank

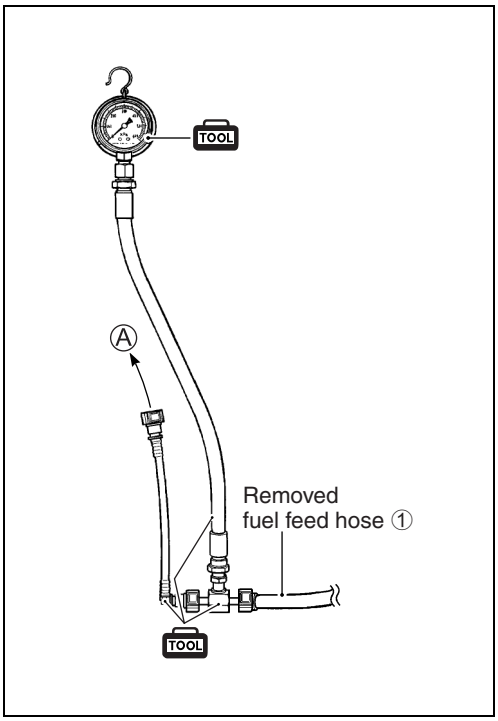

- Turn the ignition switch ON and check the fuel pressure.

DATA **Fuel pressure: Approx. 250 kPa (2.5 kgf/cm²)**

- If the fuel pressure is lower than the specification, inspect the following items:
  * Fuel filter
  * Fuel pump
  * Pressure regulator
- If the fuel pressure is higher than the specification, inspect the following items:
  * Fuel pump
  * Pressure regulator

⚠ WARNING

*** Before removing the special tools, turn the ignition switch to OFF position and release the fuel pressure slowly.**
*** Gasoline is highly flammable and explosive. Keep heat, sparks and flame away.**

FUEL PUMP INSPECTION

Turn the ignition switch ON and check that the fuel pump operates for a few seconds.
If the fuel pump motor does not make operating sound, inspect the fuel pump circuit connections or inspect the main relay and tip-over sensor.
If the fuel pump relay, tip-over sensor and fuel pump circuit connections are OK, the fuel pump may be faulty, replace the fuel pump with a new one.

FUEL DISCHARGE AMOUNT INSPECTION

⚠ WARNING

Gasoline is highly flammable and explosive. Keep heat, spark and flame away.

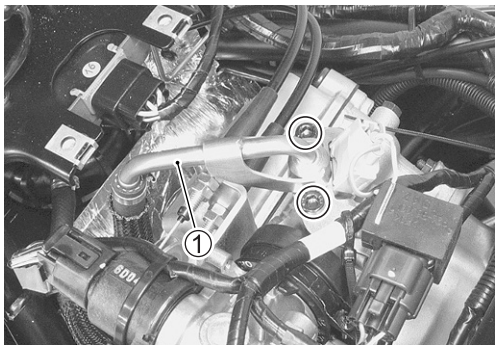

- Remove the trunk box. (☞8-11)
- Place a rag under the fuel hose and disconnect the fuel hose ① from the fuel injector.

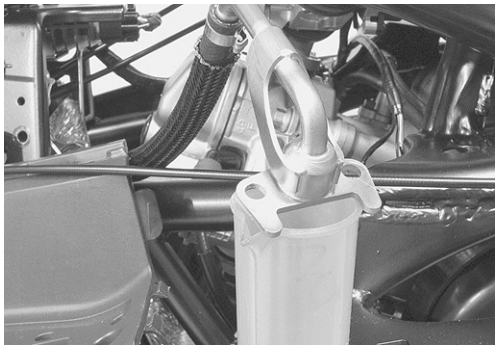

- Place the measuring cylinder and insert the fuel hose end into the measuring cylinder.

- Disconnect the fuel pump lead wire coupler ②.

Fuel pump coupler (pump side)

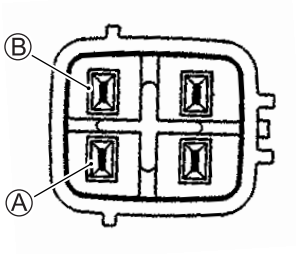

- Connect proper lead wires to the fuel pump.
- Apply 12 V to the fuel pump (between O/W wire terminal Ⓐ and Y/W wire terminal Ⓑ) for 10 seconds and measure the amount of fuel discharged.
  Battery ⊕ terminal ——— (O/W wire terminal Ⓐ)
  Battery ⊖ terminal ——— (Y/W wire terminal Ⓑ)

If the pump does not discharge the amount specified, it means that the fuel pump is defective or that the fuel filter is clogged.

DATA Fuel discharge amount: 40 ml and more/10 sec.

FUEL MESH FILTER INSPECTION AND CLEANING

- Remove the fuel pump assembly. (☞5-3)
- Remove the fuel mesh filter ①.

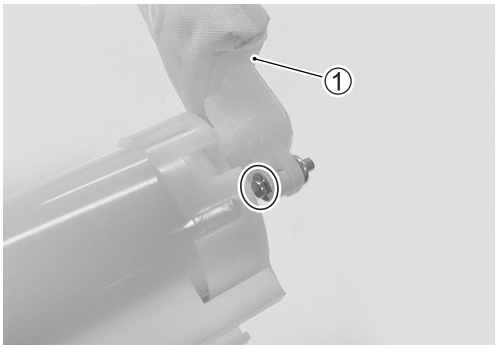

- If the fuel mesh filter is clogged with sediment or rust, fuel will not flow smoothly and loss in engine power may result.
- Blow the fuel mesh filter with compressed air.

NOTE:
If the fuel mesh filter is clogged with many sediment or rust, replace the fuel pump with a new one.

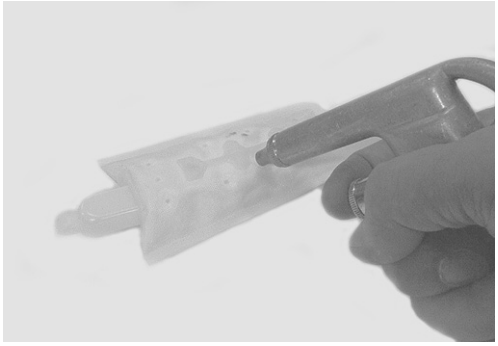

THROTTLE BODY
CONSTRUCTION

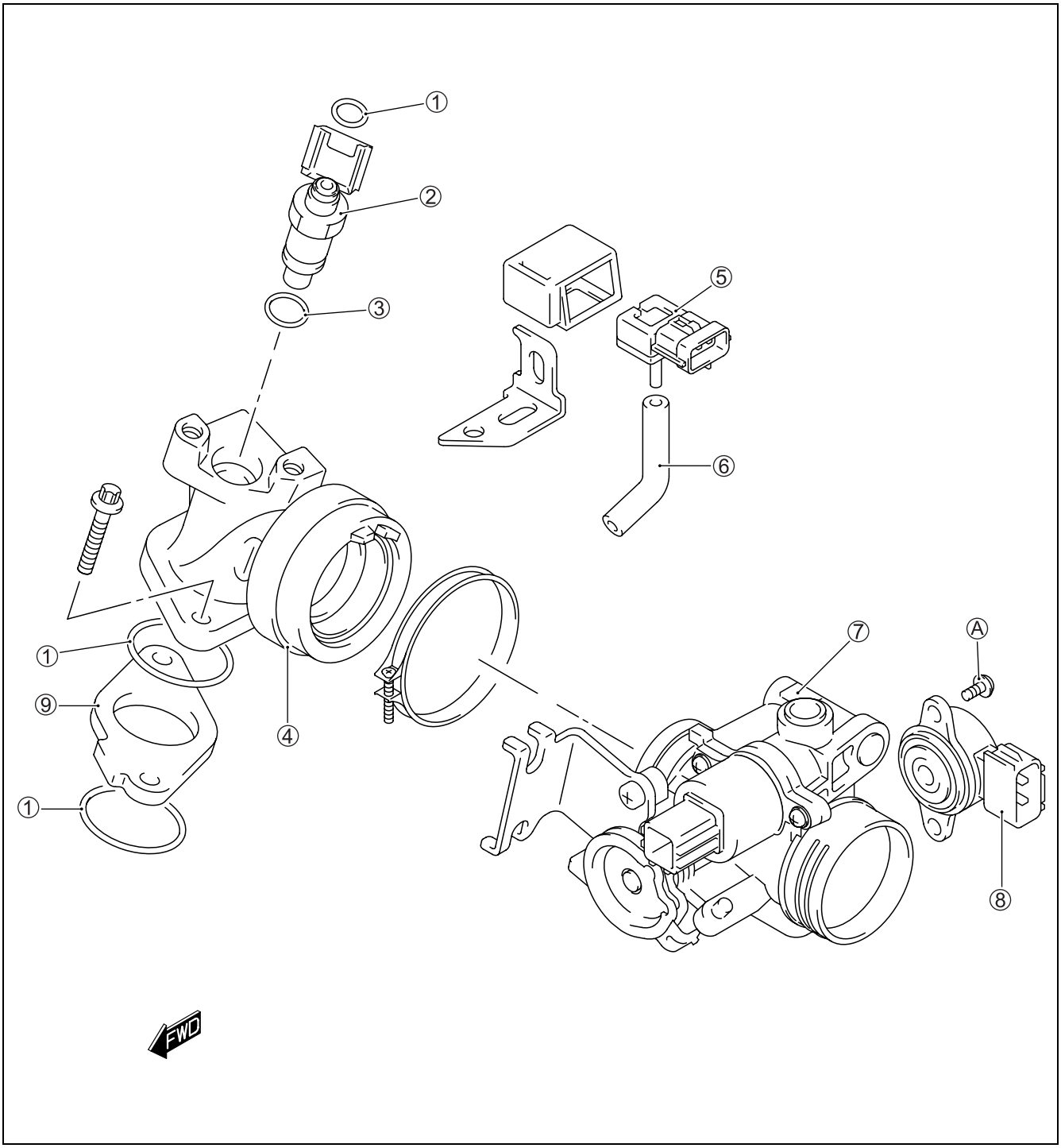

①	O-ring	⑥	Vacuum hose
②	Fuel injector	⑦	Throttle body
③	Cushion seal	⑧	TP sensor
④	Intake pipe	⑨	Insulator
⑤	IAP sensor		

ITEM	N·m	kgf-m
Ⓐ	1.8	0.18

REMOVAL AND DISASSEMBLY

CAUTION

The throttle body is assembled precisely in factory. Do not disassemble it other than shown in this manual.

- Remove the trunk box. (☞8-11)
- Remove the air cleaner box outlet tube ①.

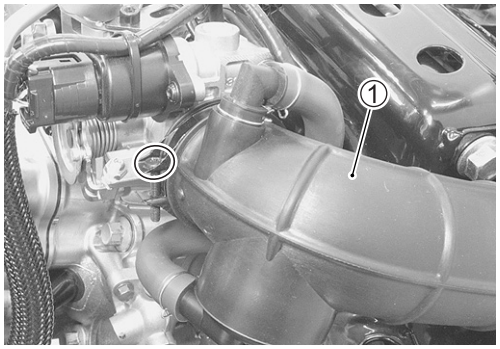

- Disconnect the engine coolant temperature meter lead wire ②, ignition coil lead wires ③ and ECT sensor coupler ④.

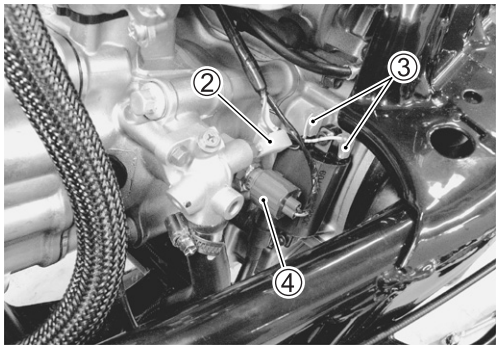

- Disconnect the TP sensor coupler ⑤, IAP sensor coupler ⑥, ISC valve coupler ⑦ and fuel injector coupler ⑧.

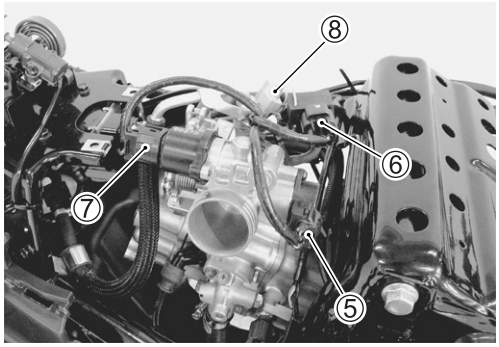

- Disconnect the throttle cables ⑨.

CAUTION

Do not snap the throttle valve from full open to full close after disconnecting the throttle cables. It may cause damage to the throttle valve and throttle body.

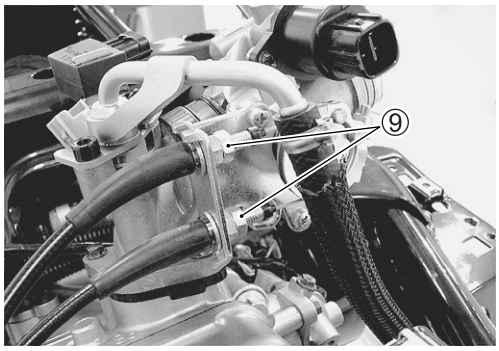

- Disconnect the fuel hose ⑩.
- Remove the throttle body assembly by removing the twist-off bolts.
- Remove the insulator ⑪.

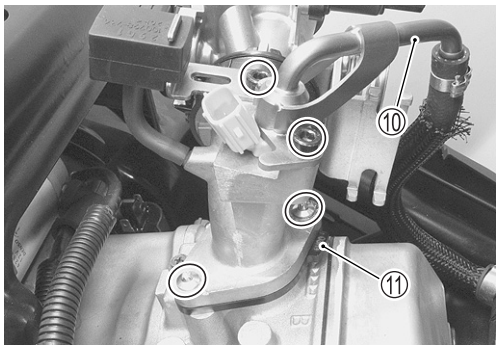

- Remove the O-ring ⑫.

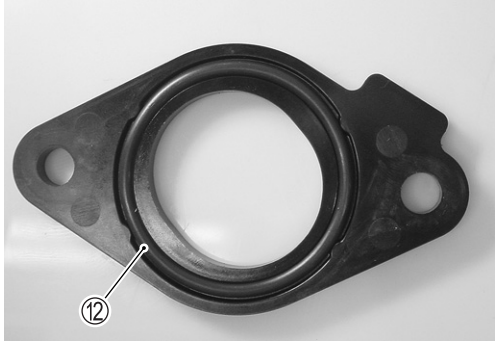

- Remove the TP sensor ⑬.

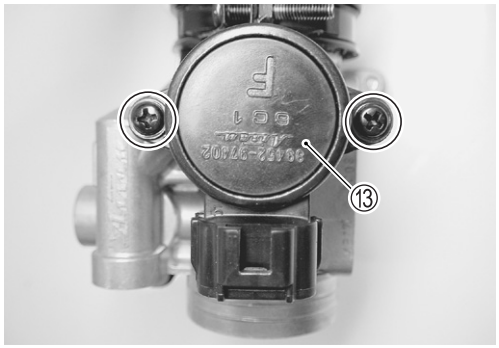

- Remove the IAP sensor ⑭.
- Disconnect the vacuum hose ⑮.

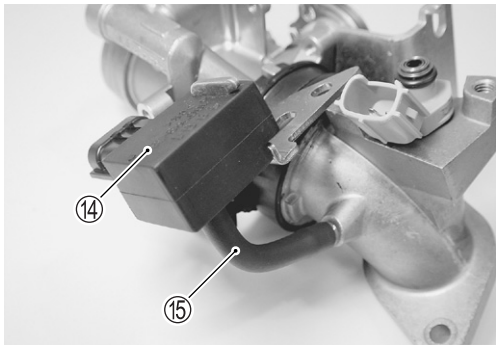

- Remove the fuel injector ⑯.

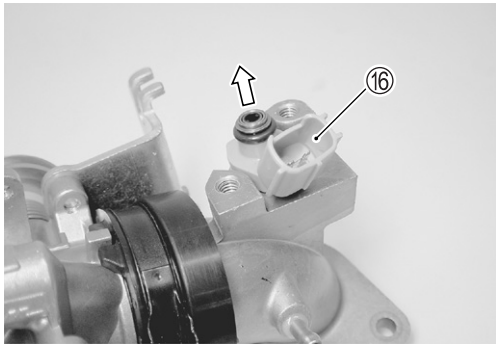

- Remove the intake pipe ⑰.

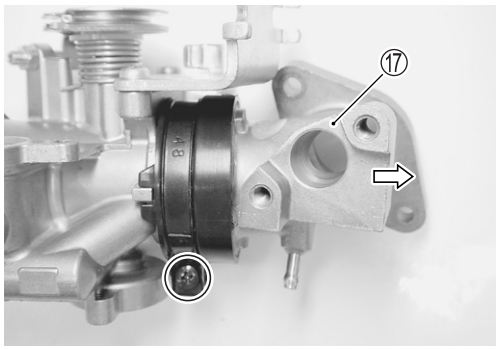

CAUTION

The ISC valve Ⓐ is available only as the throttle body assembly.

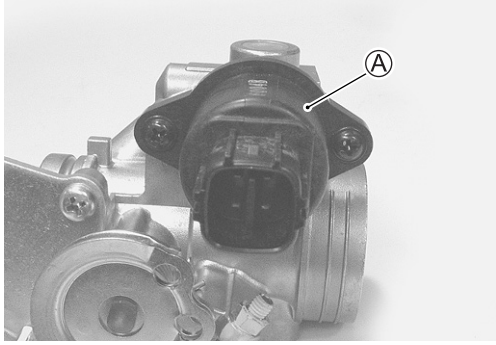

CAUTION

Never remove the throttle valve Ⓑ.

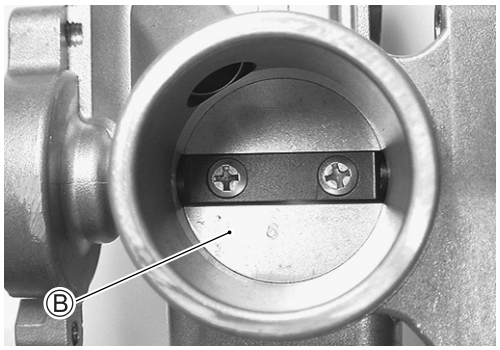

CAUTION

Avoid removing the throttle stop screw Ⓒ.

CAUTION

The throttle stop screw Ⓒ is factory-adjusted at the time of delivery and therefore avoid removing or turning it unless otherwise necessary.

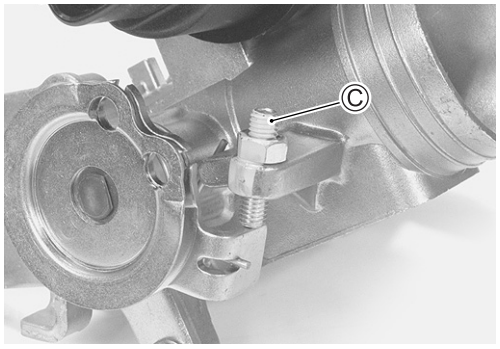

INSPECTION

- Check following items any damage or clogging.

* Throttle valve
* Vacuum hose
* Cushion seal
* O-ring
* Throttle body
* Intake pipe

FUEL INJECTOR INSPECTION

- Check fuel injector filter for evidence of dirt and contamination. If present, clean and check for presence of dirt in the fuel lines and fuel tank.
- The fuel injector can be checked without removing it from the intake pipe. (☞4-51)

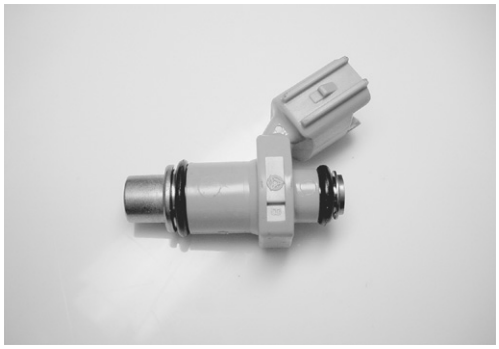

ISC VALVE

ISC valve inspection (☞4-53)

REASSEMBLY AND INSTALLATION

Reassembly and installation is in the reverse order of removal and disassembly. Pay attention to the following points:

- Install the cushion seal ① and O-ring ② to fuel injector.
- Apply thin coat of engine oil to the cushion seal and O-ring.
- Install the fuel injector by pushing it straight to intake pipe.

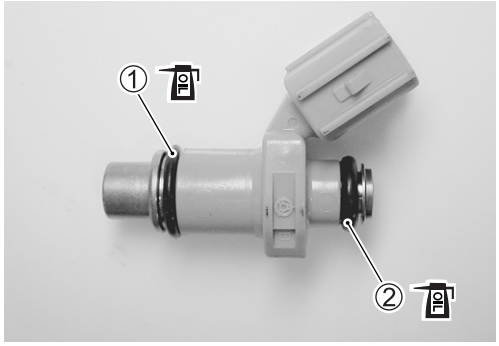

CAUTION

*** Replace the cushion seal and O-ring with a new one.**
*** Never turn the injector while pushing it.**

- With the throttle valve fully closed, install the TP sensor and tighten the TP sensor mounting screw to the specified torque.

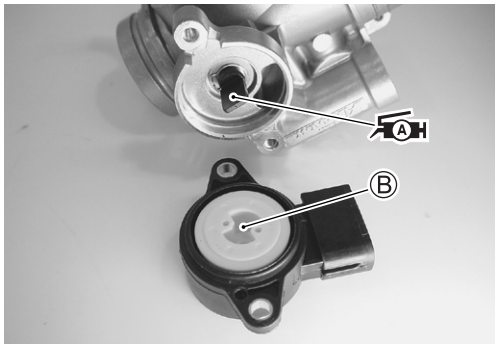

NOTE:

** Align the throttle shaft end Ⓐ with the groove Ⓑ of TP sensor.*
** Apply grease to the throttle shaft end Ⓐ if necessary.*
** Make sure the throttle valve open or close smoothly.*

99000-25010: SUZUKI SUPER GREASE "A" or equivalent

TP sensor mounting screw: 1.8 N·m (0.18 kgf-m)

- Install the insulator and throttle body assembly.

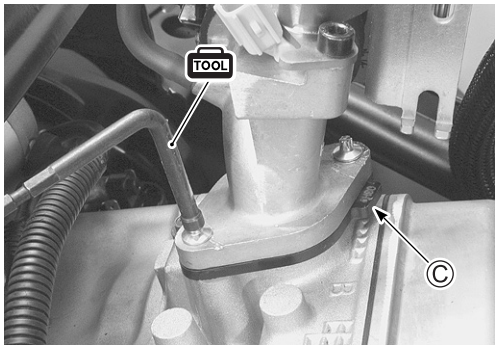

09930-11910: Torx wrench

NOTE:

** Face the O-ring side of insulator to the engine.*
** Face the tab Ⓒ of insulator to forward.*
** Use new twist-off bolts.*

- Connect the throttle pulling cable ③ and throttle returning cable ④ to the throttle cable drum.
- Adjust the throttle cable play. (☞2-11)

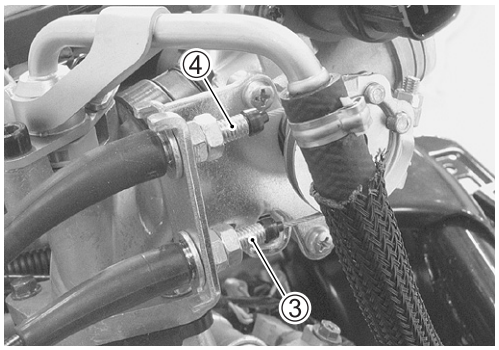

EXHAUST SYSTEM

CONTENTS

EXHAUST SYSTEM

REMOVAL

⚠ WARNING

To avoid the danger of being burned, do not touch the exhaust system when the system is hot. Any service on the exhaust system should be performed when the system is cool.

CAUTION

Make sure that the exhaust pipe and muffler have enough clearance from the rubber parts and plastic parts to avoid melting.

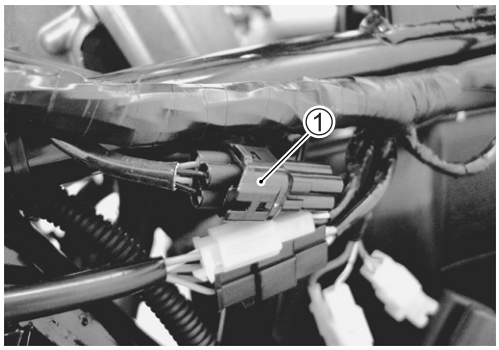

- Remove the right side leg shield. (☞8-8)
- Disconnect the HO2 sensor coupler ①.

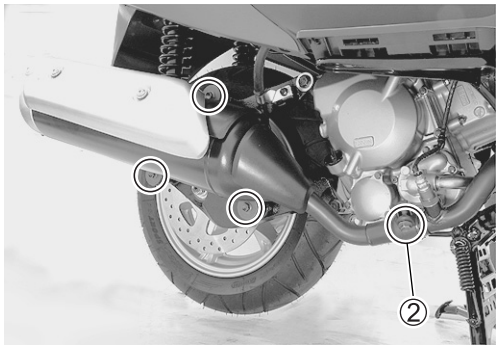

- Loosen the muffler connecting bolt ②.
- Remove the muffler assembly.

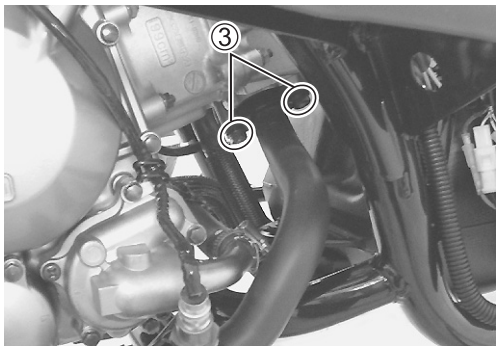

- Remove the exhaust pipe ③.

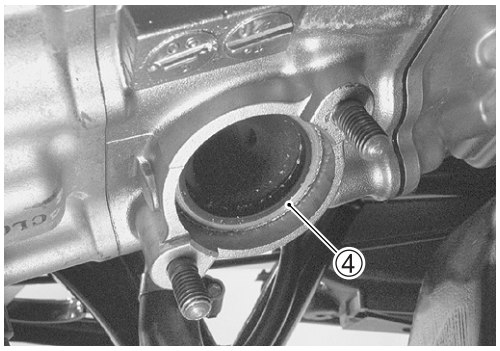

- Remove the exhaust pipe gasket ④.

INSPECTION

HO2 SENSOR (☞4-60)

INSTALLATION

Install the exhaust pipe and muffler in the reverse order of removal. Pay attention to the following points:

- Apply gas sealer to the muffler connector ①.

EXHAUST GAS SEALER:
PERMATEX 1372 (commercially available)

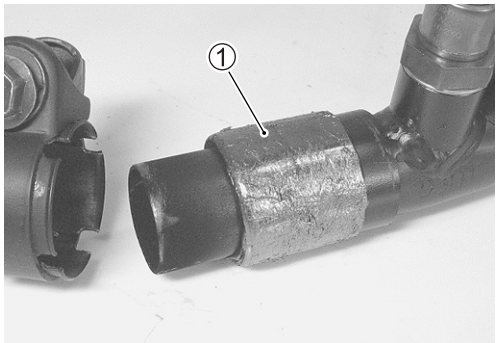

CAUTION

Replace the muffler connector with a new one.

- Install the exhaust pipe gasket ②.

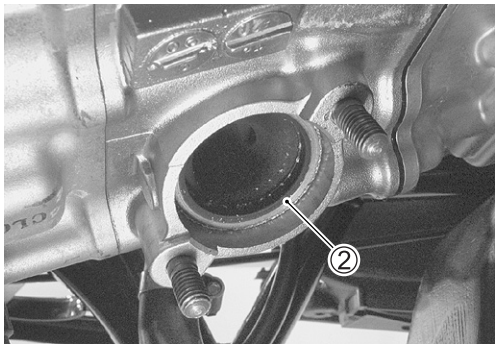

CAUTION

Replace the exhaust pipe gasket with a new one.

- Tighten the exhaust pipe nuts ③, muffler mounting bolts ④, muffler connecting bolts ⑤ and HO2 sensor ⑥ to the specified torque.

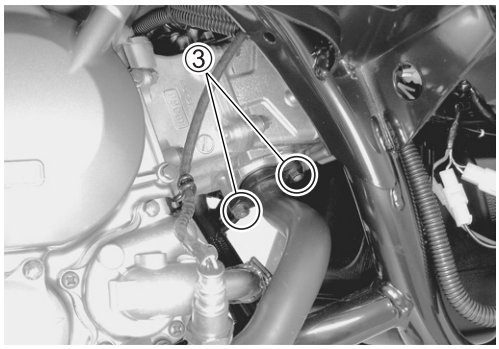

Exhaust pipe nut: 23 N·m (2.3 kgf-m)
Muffler mounting bolt: 23 N·m (2.3 kgf-m)
Muffler connecting bolt/nut: 23 N·m (2.3 kgf-m)
HO2 sensor: 48 N·m (4.8 kgf-m)

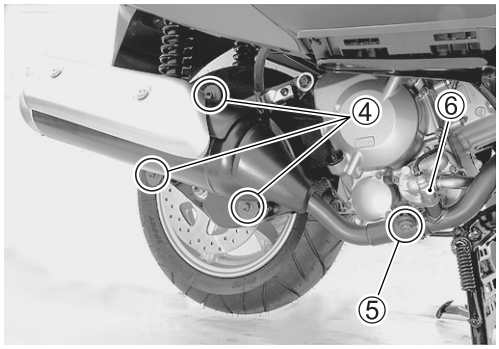

COOLING AND LUBRICATION SYSTEM

CONTENTS

ENGINE COOLANT

At the time of manufacture, the cooling system is filled with a 50:50 mixture of distilled water and ethylene glycol anti-freeze. This 50:50 mixture will provide the optimum corrosion protection and excellent heat protection, and will protect the cooling system from freezing at temperatures above –31 °C (–24 °F).
If the motorcycle is to be exposed to temperatures below –31 °C (–24 °F), this mixing ratio should be increased up to 55% or 60% according to the figure.

Anti-freeze density	Freezing point
50%	–30 °C (–24 °F)
55%	–40 °C (–44 °F)
60%	–55 °C (–67 °F)

CAUTION

- **Use a high quality ethylene glycol base anti-freeze, mixed with distilled water. Do not mix an alcohol base anti-freeze and different brands of anti-freeze.**
- **Do not put in 60% and more anti-freeze or 50% and less. (Refer to below figure.)**
- **Do not use a radiator anti-leak additive.**

50% Engine coolant including reservoir capacity

Anti-freeze	800 ml
Water	800 ml

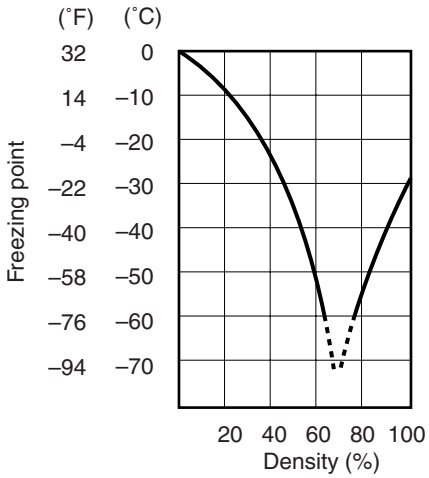

Fig. 1 Engine coolant density-freezing point curve

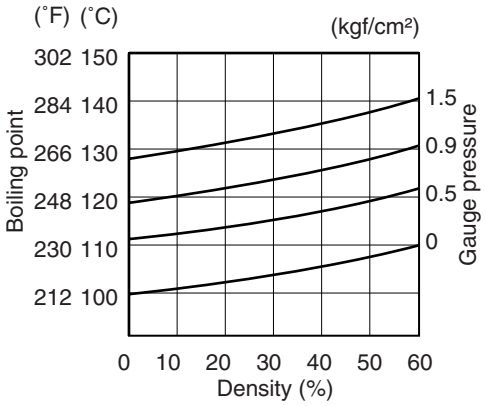

Fig. 2 Engine coolant density-boiling point curve

⚠ WARNING

- **You can be injured by scalding fluid or steam if you open the radiator cap when the engine is hot. After the engine cools, wrap a thick cloth around cap and carefully remove the cap by turning it a quarter turn to allow pressure to escape and then turn the cap all the way off.**
- **The engine must be cool before servicing the cooling system.**
- **Coolant is harmful;**
  - **If it comes in contact with skin or eyes, flush with water.**
  - **If swallowed accidentally, induce vomiting and call physician immediately.**
  - **Keep it away from children.**

RADIATOR AND RADIATOR HOSE

INSPECTION

Before removing the radiator and draining the engine coolant, inspect cooling system for tightness.

- Remove the lid.
- Remove the radiator cap and connect the tester ① to the filler.
- Give a pressure of about 120 kPa (1.2 kgf/cm²) and see if the system holds this pressure for 10 seconds. If the pressure should fall during this 10-second interval, it means that there is a leaking point in the system. In such a case, inspect the entire system and replace the leaking component or part.

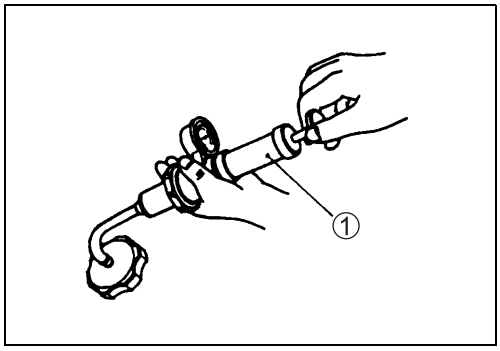

⚠ WARNING

*** Do not remove the radiator cap when the engine is hot.**
*** When removing the radiator cap tester, put a rag on the filler to prevent spouting of engine coolant.**

CAUTION

Do not allow the pressure to exceed the radiator cap release pressure, or the radiator can be damaged.

RADIATOR CAP INSPECTION

Test the radiator cap for release pressure by using the radiator cap tester in the following manner.

- Fit the cap ① to the tester ②, as shown, and build up pressure slowly by operating the tester. Make sure that the pressure build-up stops at 98.2 – 122.7 kPa (1.00 – 1.25 kgf/cm²) and that, with the tester held standstill, the cap is capable of holding that pressure for at least 10 seconds. Replace the cap if it is found not to satisfy either of these two requirements.

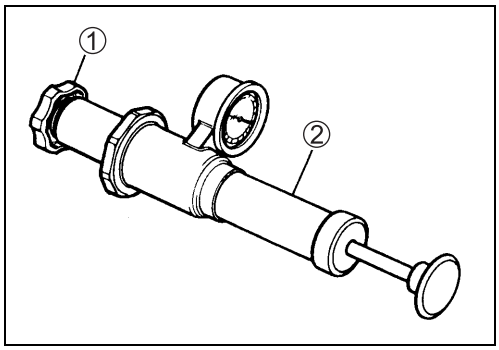

DATA Radiator cap valve release pressure:
98.2 – 122.7 kPa (1.00 – 1.25 kgf/cm²)

RADIATOR HOSE INSPECTION

(☞2-11)

REMOVAL

- Remove the lower leg shield. (☞8-7)
- Remove the rear lower leg shield. (☞8-8)
- Place a container under the radiator hose.
- Remove the radiator cap.

⚠ WARNING

Do not remove the radiator cap when the radiator is hot.

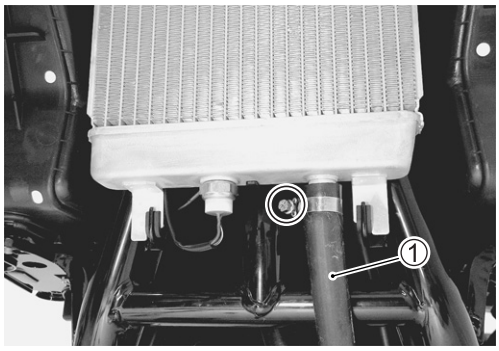

- Disconnect the radiator hose ① to let coolant drain off.

- Remove the radiator mounting bolt.
- Disconnect the radiator hoses ② and ③.

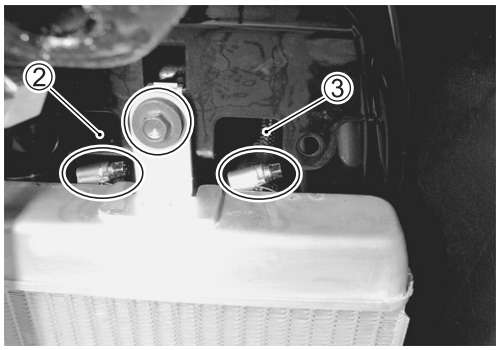

- Remove the clamp.
- Disconnect the cooling fan thermo-switch coupler (White) ④.
- Disconnect the cooling fan lead wire coupler (Black) ⑤.

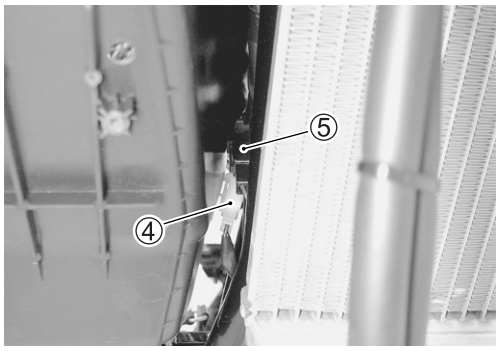

- Remove the radiator ⑥.

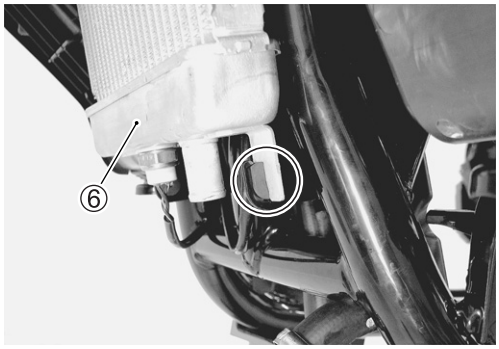

DISASSEMBLY

- Remove the cooling fan ①.
- Remove the cooling fan thermo-switch ②.

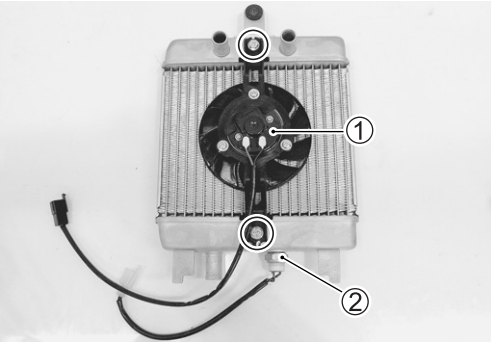

RADIATOR INSPECTION AND CLEANING

- Check the radiator for dirt or small bug stuck between the fins.
- Use compressed air for cleaning. If dirt is excessive, wash with water.
- Fins bent or dented can be straightened using a small plane screwdriver.

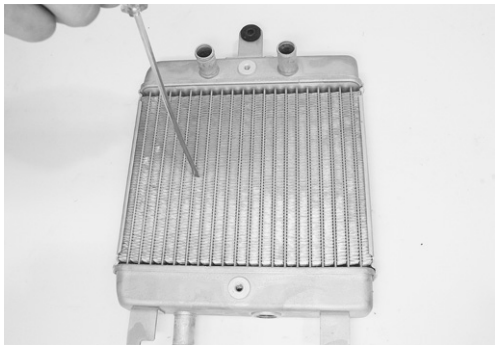

REASSEMBLY AND INSTALLATION

Reassembly and installation is in the reverse order of removal and disassembly. Pay attention to the following points:

COOLING FAN

- Install the cooling fan ①.
- Tighten the cooling fan mounting bolts to the specified torque.

Cooling fan mounting bolt: 8.4 N·m (0.84 kgf-m)

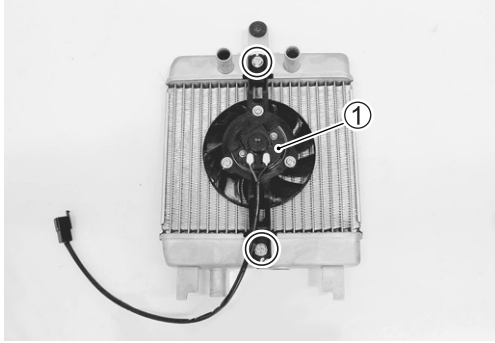

COOLING FAN THERMO-SWITCH

- Fit the O-ring ② to the cooling fan thermo-switch ③.

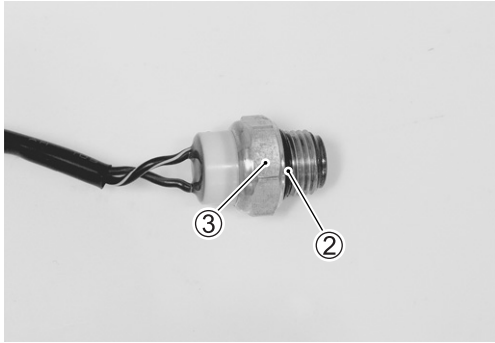

- Tighten the cooling fan thermo-switch ③ to the specified torque.

Cooling fan thermo-switch: 12 N·m (1.2 kgf-m)

CAUTION

> *** Replace the O-ring with a new one.**
> *** Do not coat grease to the O-ring.**

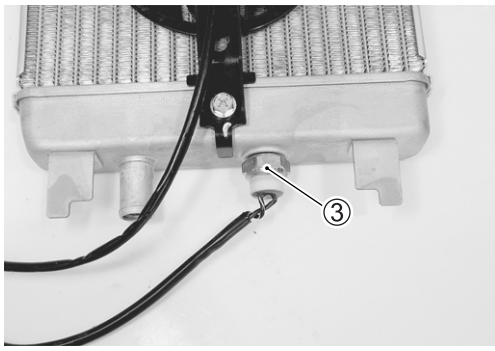

RADIATOR

- Connect the cooling fan thermo-switch coupler ① and the cooling fan lead wire coupler ②.
- Clamp the cooling fan thermo-switch lead wire and cooling fan lead wire with the frame.

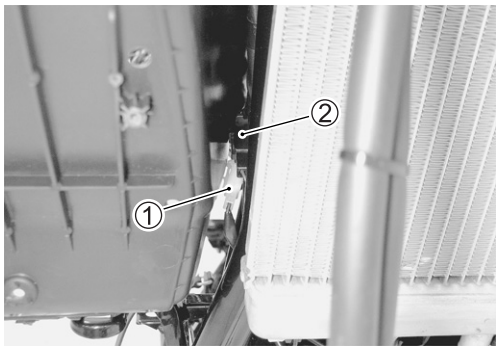

- With the hooked part Ⓐ connected to the radiator end, install the radiator.
- Connect the radiator hose ③.

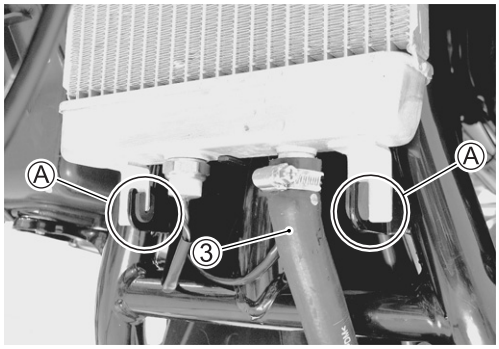

- Connect the radiator hoses ④, ⑤.
- Tighten the radiator mounting bolt securely.
- After the radiator has been installed, fill engine coolant and perform air bleeding. (☞2-13)

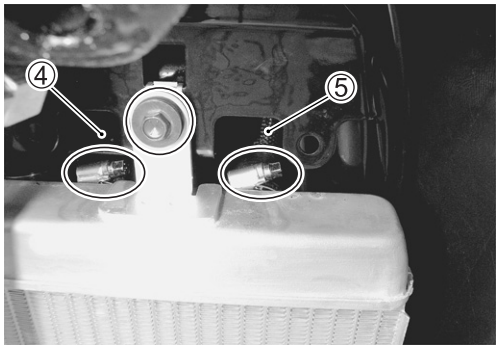

COOLING FAN

INSPECTION

- Remove the lower leg shield. (☞8-7)
- Remove the clamp.
- Disconnect the cooling fan lead wire coupler ①.
- Test the cooling fan motor for load current with an ammeter connected as shown in the illustration.

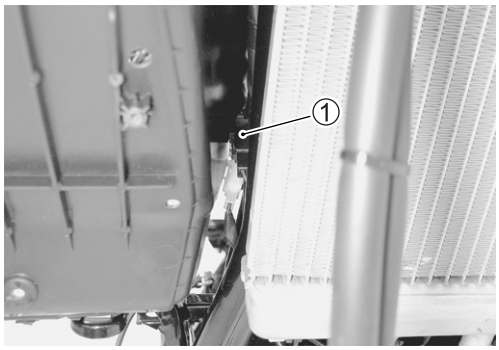

- The voltmeter is for making sure that the battery ② applies 12 V to the cooling fan motor ③. With the cooling fan motor with electric motor fan running at full speed, the ammeter ④ should be indicating 2.1 A and under.
- If the fan motor does not turn, replace the motor assembly with a new one.

NOTE:
When making above test, it is not necessary to remove the cooling fan.

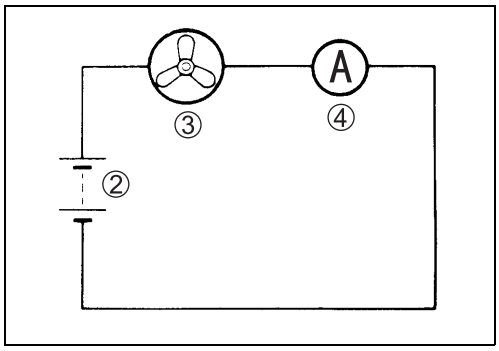

REMOVAL

(☞7-4)

INSTALLATION

(☞7-5)

COOLING FAN THERMO-SWITCH

REMOVAL

- Remove the lower leg shield. (☞8-7)
- Drain engine coolant. (☞2-12)
- Remove the clamp.
- Disconnect the cooling fan thermo-switch coupler ①.

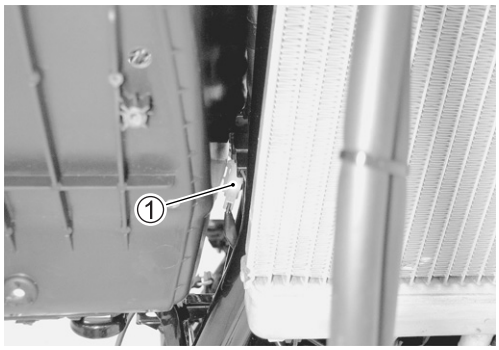

- Remove the cooling fan thermo-switch ②.

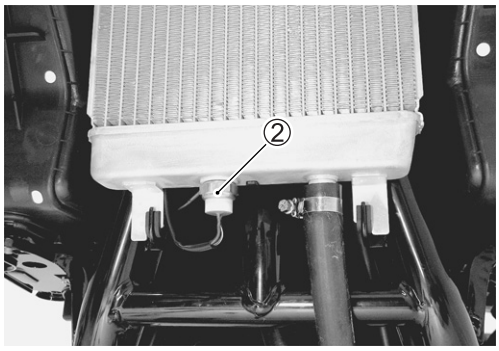

INSPECTION

- Place the cooling fan thermo-switch in oil contained in a pan as shown and raise the oil temperature gradually to check for the temperature at which the switch starts to operate.

If the switch operating temperature is not within the specified range, replace the switch with a new one.

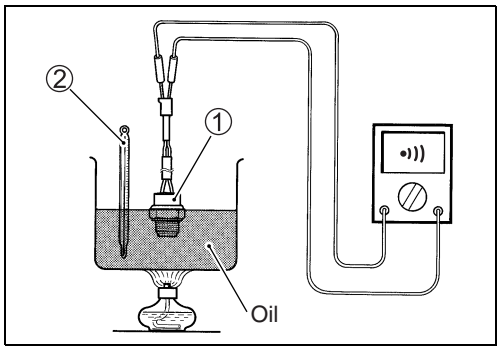

TOOL 09900-25008: Multi-circuit tester

DATA Cooling fan operating temperature:
Standard (OFF → ON): Approx. 105 °C (221 °F)
(ON → OFF): Approx. 100 °C (212 °F)

CAUTION

Do not allow the cooling fan switch ① and the thermometer ② to come in contact with the bottom of the pan.

INSTALLATION

- After the cooling fan thermo-switch has been installed, fill engine coolant and perform air bleeding. (☞2-13)

ENGINE COOLANT TEMPERATURE GAUGE

REMOVAL

- Remove the frame covers. (☞8-10)
- Disconnect the lead wire ①.
- Remove the engine coolant temperature gauge ②.

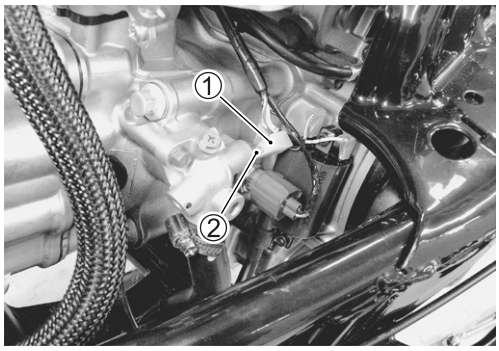

INSPECTION

- Connect the engine coolant temperature gauge to the ohmmeter and dip it in water contained in a pan which is placed on an electric heater.
- Gradually raise water temperature while reading the thermometer in the pan and the ohmmeter connected. If the resistance measured is out of specification, replace the temperature gauge with a new one.

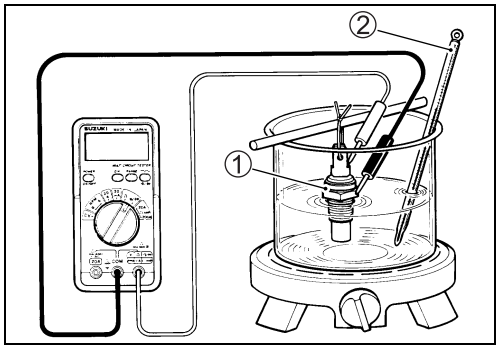

TOOL 09900-25008: Multi-circuit tester

ENGINE COOLANT TEMPERATURE GAUGE

Temperature	Standard resistance
50 °C (122 °F)	Approx. 153.9 Ω
100 °C (212 °F)	Approx. 27.4 Ω

CAUTION

*** Handle the engine coolant temperature gauge carefully as it is vulnerable to impact.**
*** Do not allow the engine coolant temperature gauge ① and the thermometer ② to come in contact with the bottom of the pan.**

- After the engine coolant temperature gauge has been installed, fill engine coolant and perform air bleeding. (☞2-13)

INSTALLATION

- With THREAD LOCK SUPER applied to the threaded part, tighten the engine coolant temperature gauge.

1322 99000-32110: THREAD LOCK SUPER "1322" or equivalent

Engine coolant temperature gauge: 13 N·m (1.3 kgf-m)

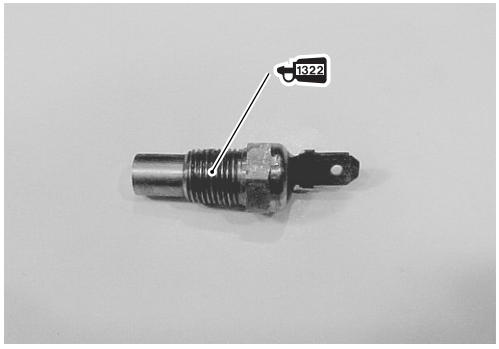

ECT SENSOR

REMOVAL

- Remove the frame covers. (☞8-10)
- Remove the thermostat case. (☞7-11)
- Disconnect the ECT sensor coupler ①.
- Remove the ECT sensor ②.

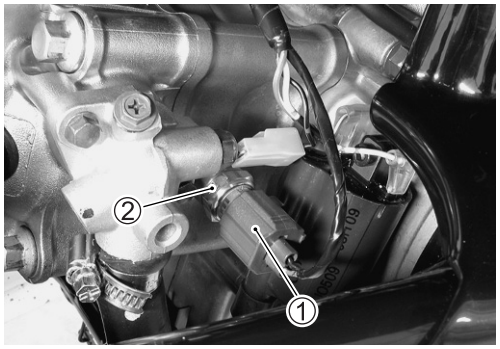

INSPECTION

- Check the ECT sensor by testing it at the bench as shown in the figure. Connect the ECT sensor ① to a circuit tester and place it in the oil ② contained in a pan, which is placed on a stove.
- Heat the oil to raise its temperature slowly and read the column thermometer ③ and the ohmmeter.

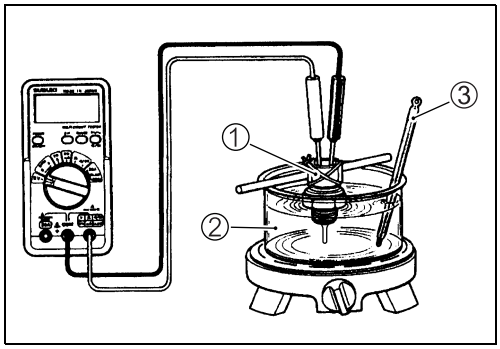

DATA ECT sensor specification

Temperature	Standard resistance
20 °C (68 °F)	Approx. 2.45 kΩ
50 °C (122 °F)	Approx. 0.811 kΩ
80 °C (176 °F)	Approx. 0.318 kΩ
110 °C (230 °F)	Approx. 0.142 kΩ

- If the ECT sensor ohmic value does not change in the proportion indicated, replace it with a new one.

CAUTION

*** Take special care when handling the ECT sensor. It may cause damage if it gets a sharp impact.**
*** Do not contact the ECT sensor and the column thermometer with a pan.**

INSTALLATION

- Tighten the ECT sensor to the specified torque.

ECT sensor: 18 N·m (1.8 kgf-m)

CAUTION

> *** Replace the removed sealing washer ① with a new one.**
> *** Take special care when handling the ECT sensor. It may cause damage if it gets a sharp impact.**

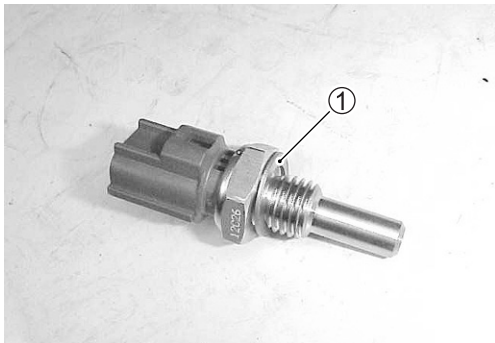

- After the thermostat case has been installed, fill engine coolant and perform air bleeding. (☞2-13)

THERMOSTAT

REMOVAL

- Remove the frame covers. (☞8-10)
- Drain small amount of engine coolant.
- Remove the thermostat case ①.

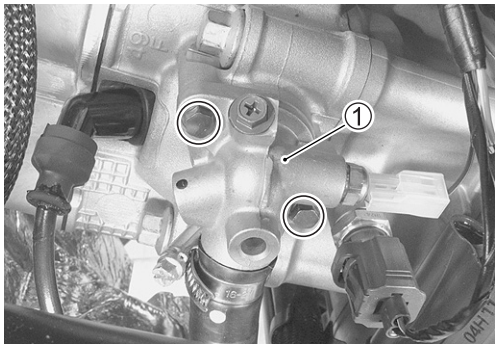

- Remove the thermostat ②.

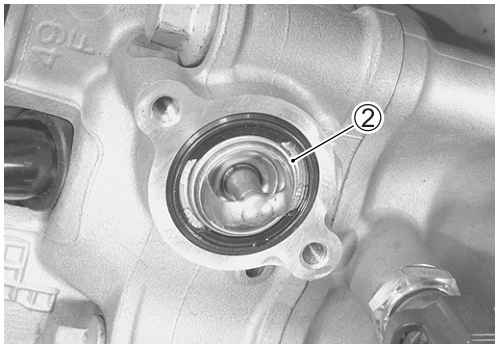

INSPECTION

- Check for crack or break on the thermostat.

- Immerse the thermostat in water contained in a pan as shown and measure the valve start-to-open temperature when water is heated gradually.

If the thermostat valve opening temperature is not within the specified range, replace the thermostat with a new one.

DATA Thermostat valve opening temperature:
Standard: Approx. 82 °C (180 °F)

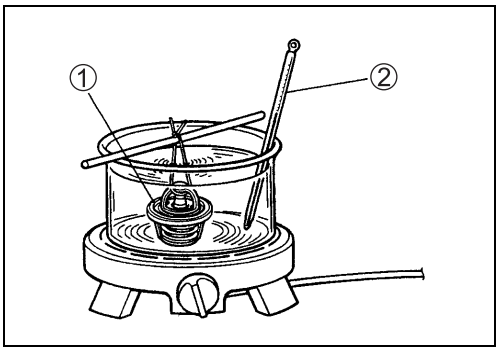

CAUTION

- *** Do not allow the thermostat ① and thermometer ② to come in contact with the bottom of the pan.**
- *** As the thermostat operating response to water temperature change is gradual, do not raise water temperature too quickly.**
- *** The thermostat with its valve open even slightly under normal temperature must be replaced.**

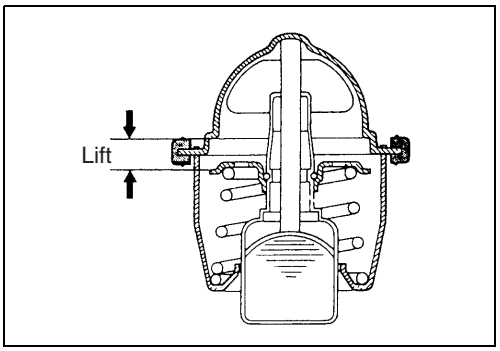

- Continue to heat water until 95 °C is exceeded and check for the thermostat valve lift when temperature is at 95 °C.

If the valve lift is out of specification or less then the specification, replace the thermostat with a new one.

DATA Thermostat valve lift:
Standard: 3.0 mm and over at 95 °C (203 °F)

INSTALLATION

- Install the thermostat case ①.

Thermostat case bolt: 10 N·m (1.0 kgf-m)

- After the thermostat has been installed, fill engine coolant and perform air bleeding. (☞2-13)

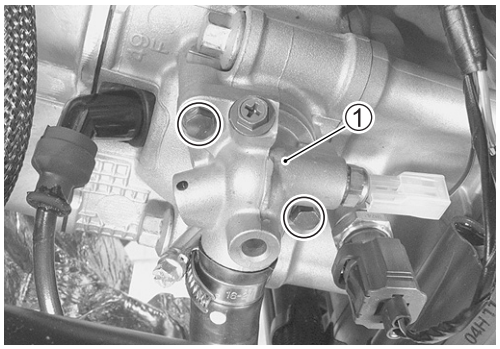

WATER PUMP

REMOVAL AND DISASSEMBLY

NOTE:
Before draining engine oil and engine coolant, inspect engine oil and coolant leakage between the water pump and crankcase. If engine oil is leaking, visually inspect the oil seal and O-ring. If engine coolant is leaking, visually inspect the mechanical seal and seal washer. (☞7-15)

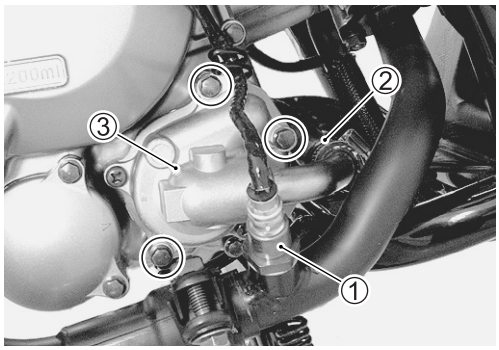

- Remove the rear lower leg shield. (☞8-8)
- Drain engine coolant. (☞2-12)
- Drain engine oil. (☞2-9)
- Remove the HO2 sensor ①.
- Disconnect the radiator hose ②.
- Remove the water pump ③.

- Remove the water pump cover ④.

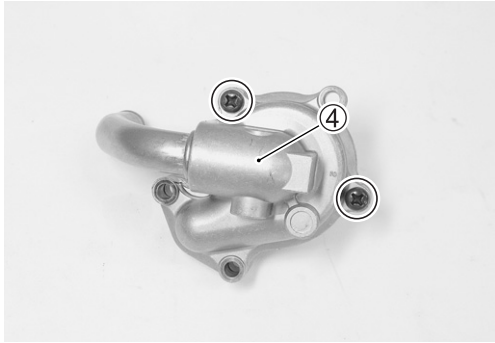

- Remove the O-rings ⑤ and ⑥.

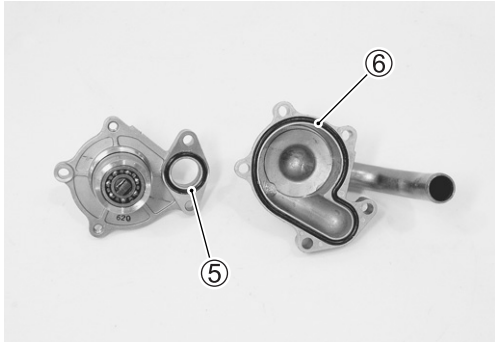

- Remove the E-ring ⑦.
- Draw out the water pump shaft ⑧.
- Remove the O-ring ⑨.

- Remove the mechanical seal ring ⑩ and rubber seal ⑪ from the impeller.

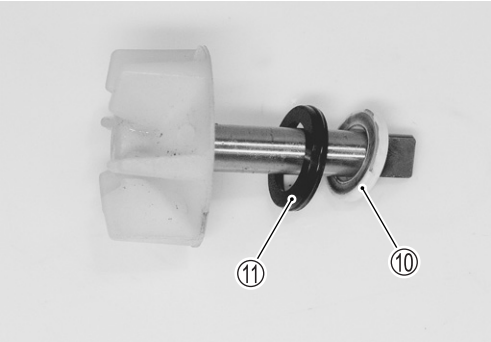

- Remove the mechanical seal ⑫ with the special tool.

TOOL 09921-20240: Bearing remover set (10 mm)

NOTE:
If there is no abnormal condition, the mechanical seal removal is not necessary.

CAUTION

The removed mechanical seal must be replaced with a new one.

- Remove the oil seal ⑬.

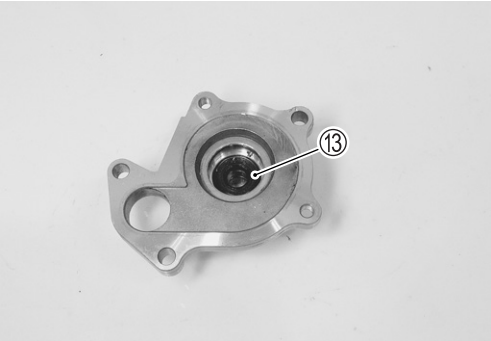

- Remove the bearing.

TOOL 09921-20240: Bearing remover set (10 mm)

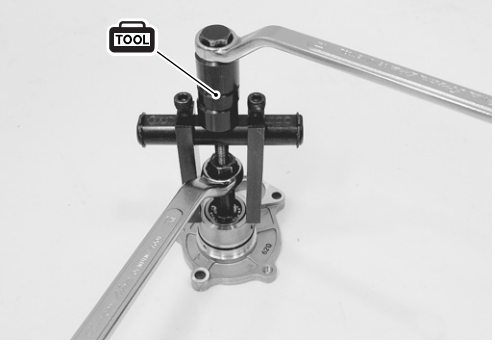

INSPECTION

MECHANICAL SEAL

- Visually inspect the mechanical seal for damage, with particular attention given to the sealing face.
- Replace the mechanical seal that shows indications of leakage. Also replace the seal ring if necessary.

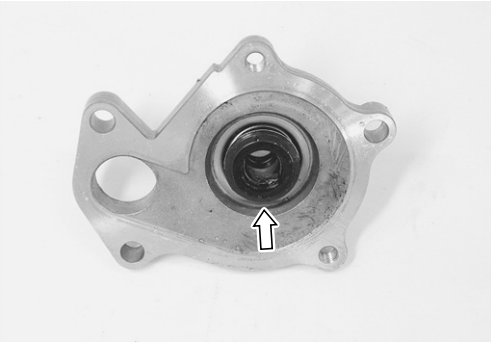

OIL SEAL

- Visually inspect the oil seal for damage, with particular attention given to the lip.
- Replace the oil seal that shows indications of leakage.

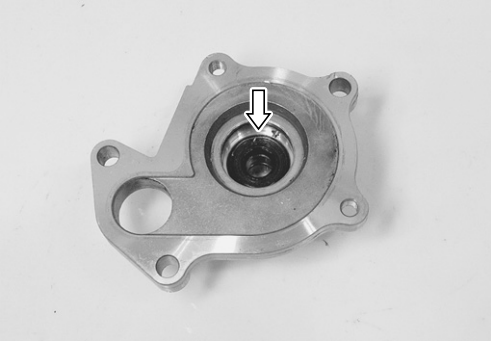

REASSEMBLY AND INSTALLATION

Reassembly and installation is in the reverse order of removal and disassembly. Pay attention to the following points:

- Install the bearing with the special tool.

TOOL 09913-70210: Bearing installer set (25 mm)

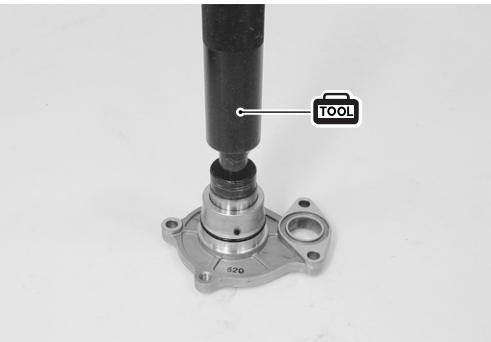

- Install the oil seal with the special tool.

TOOL 09913-70210: Bearing installer set (22 mm)

NOTE:
The stamped mark on the oil seal faces mechanical seal side.

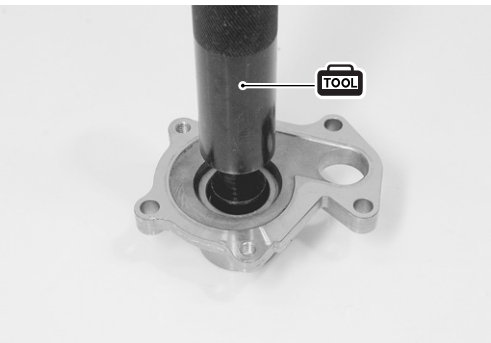

- Apply a small quantity of grease to the oil seal lip.

A 99000-25010: SUZUKI SUPER GREASE "A" or equivalent

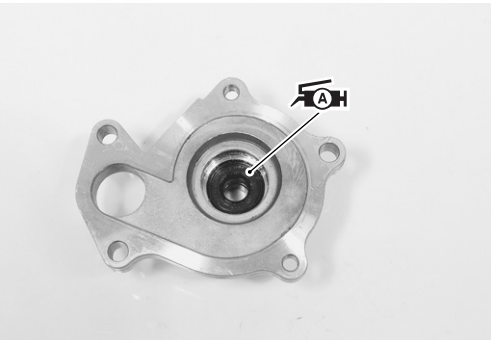

- Install the new mechanical seal using a suitable size socket wrench.

NOTE:
On the new mechanical seal, the sealer Ⓐ has been applied.

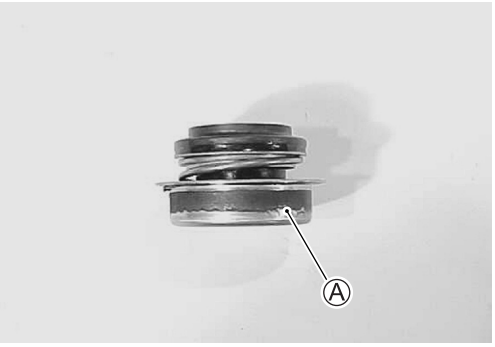

- Install the rubber seal ① into the impeller.
- After wiping off the oily or greasy matter from the mechanical seal ring, install it into the impeller.

NOTE:
The paint marked side Ⓑ of mechanical seal ring faces the rubber seal.

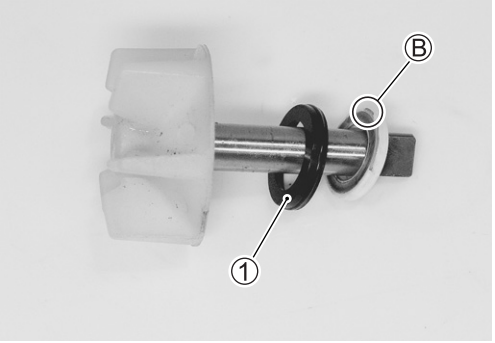

- Install the water pump shaft and the E-ring ②.

- Install the new O-rings ③, ④ and ⑤.

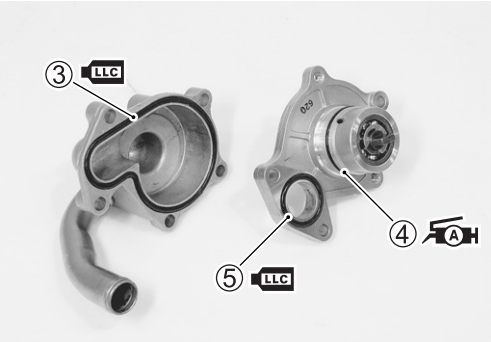

CAUTION

Use the new O-rings to prevent engine coolant leakage.

NOTE:
** Apply engine coolant to the O-ring ③, ⑤.*
** Apply grease to the O-ring ④.*

99000-25010: SUZUKI SUPER GREASE "A" or equivalent

- Install the water pump assembly.

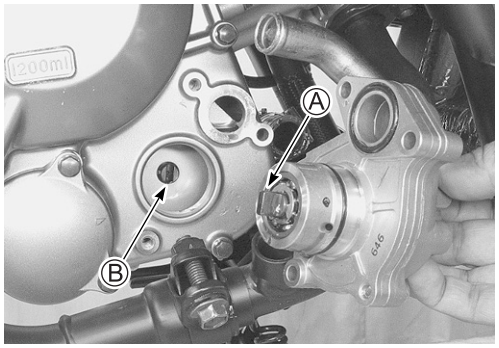

CAUTION

Align the boss Ⓐ of the water pump shaft end with the slot Ⓑ of the oil pump shaft.

- Tighten the water pump mounting bolts securely.
- Install the HO2 sensor ⑥.

HO2 sensor: 48 N·m (4.8 kgf-m)

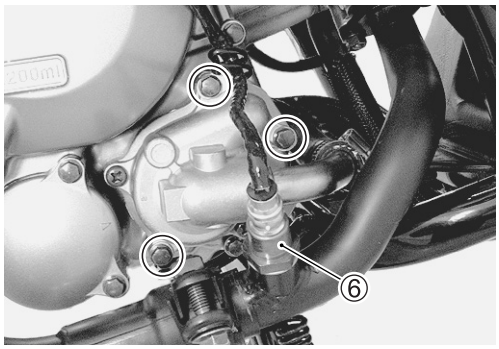

- Pour engine coolant. (☞2-12)
- Pour engine oil. (☞2-9)

LUBRICATION SYSTEM

OIL PRESSURE

☞2-23

OIL FILTER

☞2-9

OIL SUMP FILTER

☞3-35

OIL PUMP

☞3-35

ENGINE LUBRICATION SYSTEM CHART

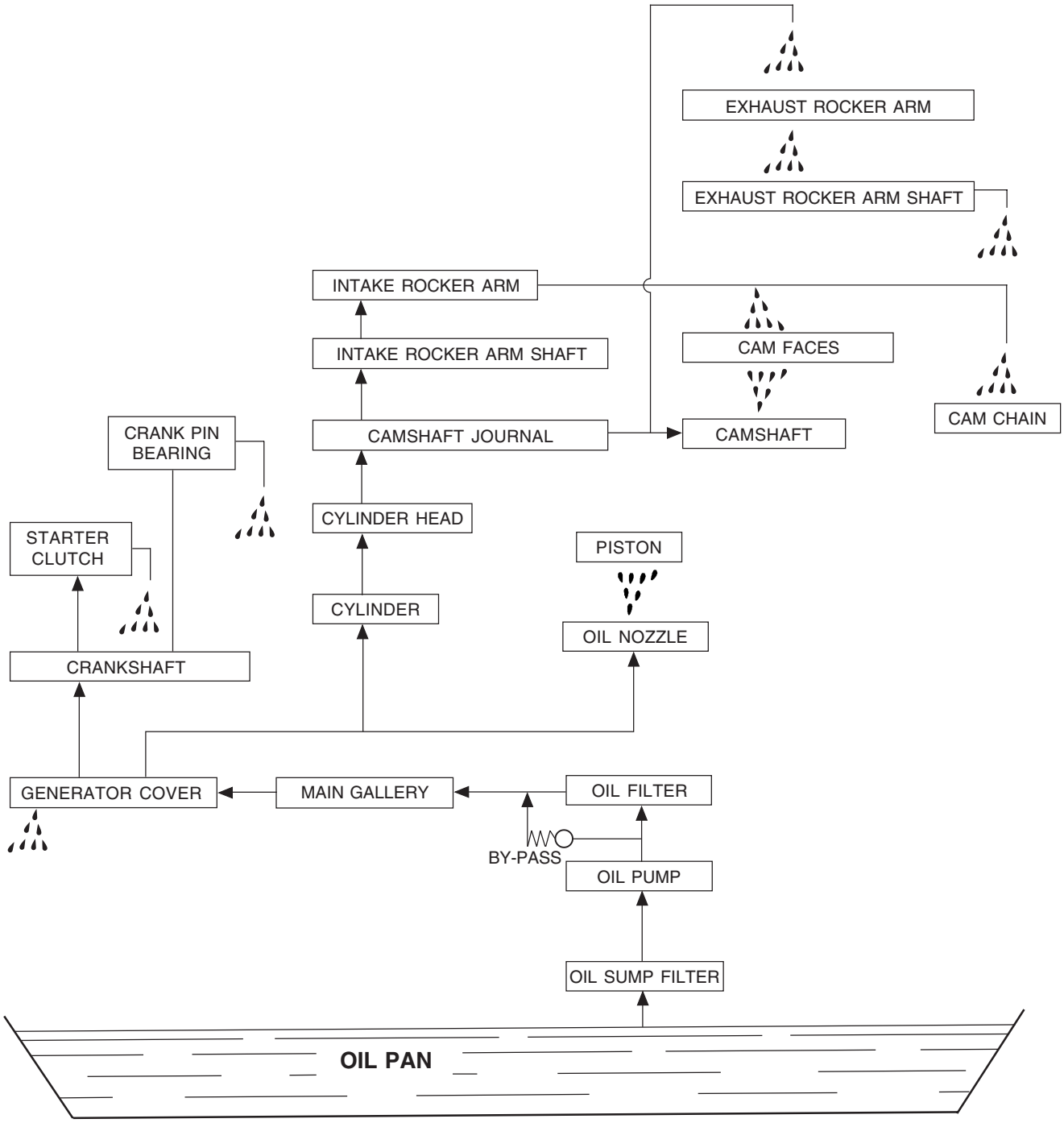

CHASSIS

CONTENTS

CHASSIS

CONTENTS

EXTERIOR PARTS

FASTENER

REMOVAL

- Depress the head of fastener center piece ①.
- Pull out the fastener.

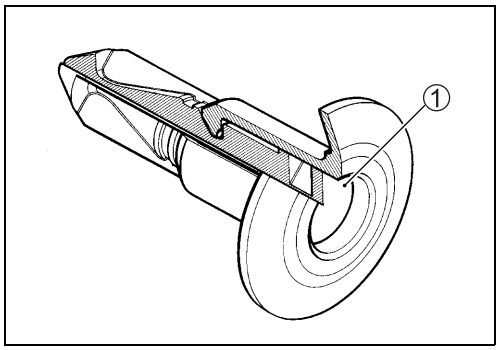

INSTALLATION

- Let the center piece stick out toward the head so that the pawls ② close.
- Insert the fastener into the installation hole.

NOTE:
To prevent the pawl ② from damage, insert the fastener all the way into the installation hole.

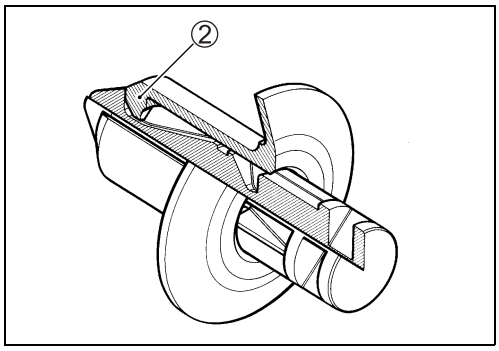

- Push in the head of center piece until it becomes flush with the fastener outside face.

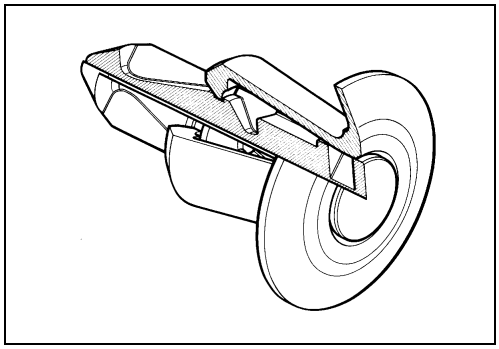

HANDLEBAR COVERS

REMOVAL

- Remove the rear view mirrors ① and fasteners.
- Remove the rear handlebar cover ② by pulling it upward.

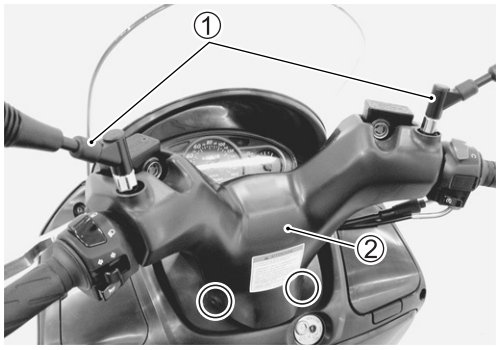

- Remove the front handlebar cover ③.

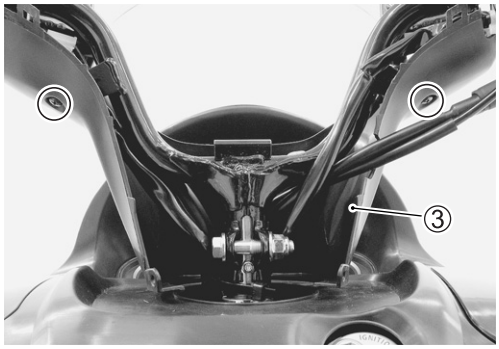

INSTALLATION

Installation is in the reverse order of removal.

FRONT COVER

REMOVAL

Remove the screws.

- Remove the front cover ①.

☆: indicates hook location

INSTALLATION

Installation is in the reverse order of removal.

WINDSCREEN

REMOVAL

- Remove the front cover. (☞Above)
- Remove the windscreen ①.

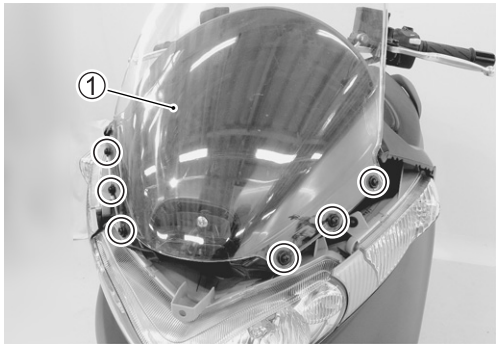

INSTALLATION

Installation is in the reverse order of removal.

LOWER METER PANEL

REMOVAL

- Remove the windscreen. (☞8-4)
- Remove the screw ①.

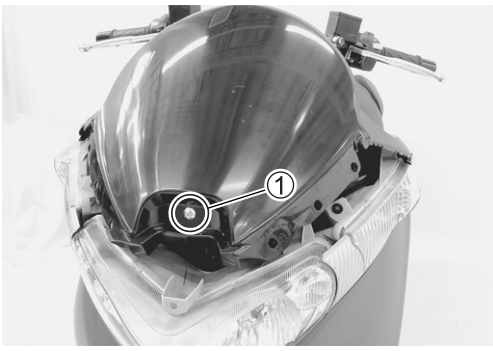

- Remove the lower meter panel ② by removing the speedometer mounting screws.

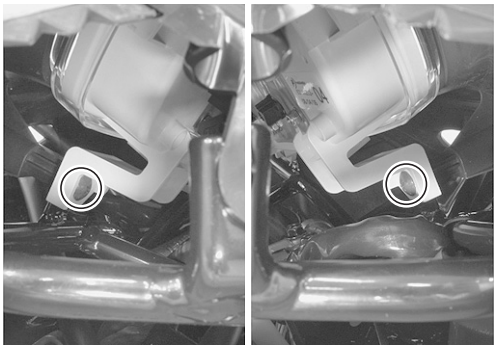

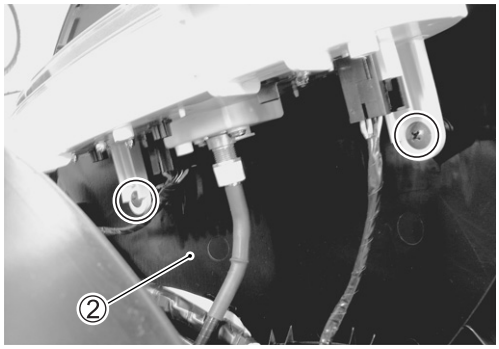

INSTALLATION

Installation is in the reverse order of removal.

FRONT LEG SHIELD

REMOVAL

- Remove the front cover. (☞8-4)
- Remove the floor mats ①.
- Remove the screws (8 pcs) and fasteners (4 pcs).
- Disconnect the coupler ② and remove the front leg shield along with the headlight assembly.

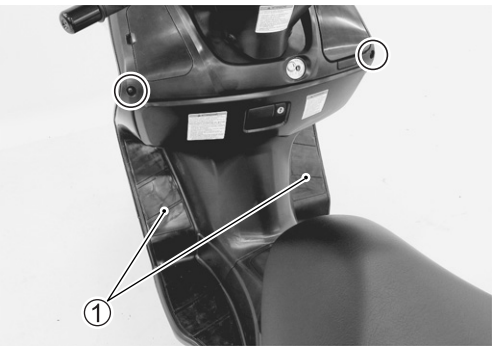

INSTALLATION

Installation is in the reverse order of removal.

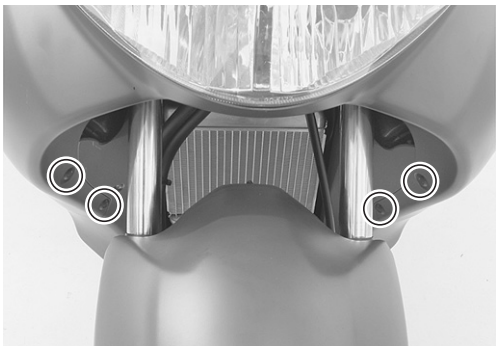

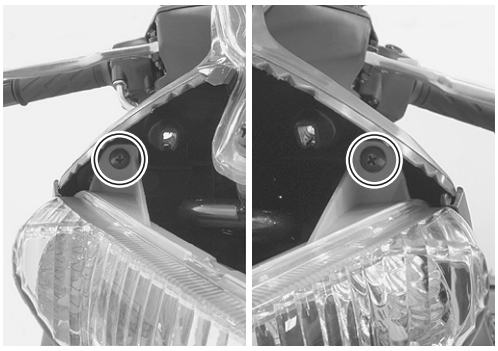

LOWER LEG SHIELD

REMOVAL

- Remove the front leg shield. (☞8-6)
- Remove the screws (6 pcs) and fasteners (4 pcs).
- Remove the horn mounting bolt ①.
- Remove the lower leg shield ②.

CAUTION

Take care not to bend the radiator fins.

INSTALLATION

Installation is in the reverse order of removal.

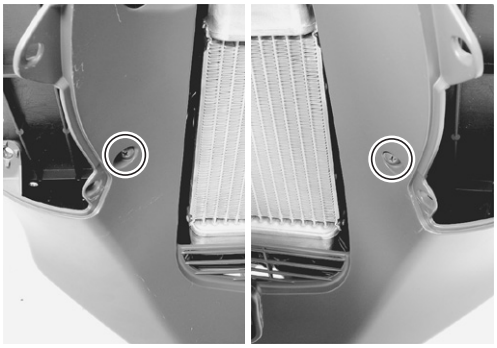

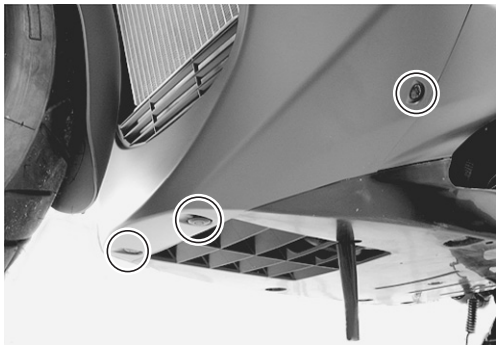

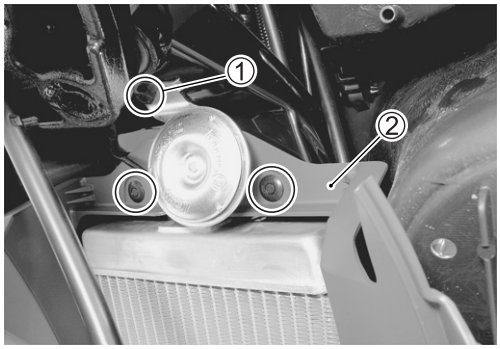

SIDE LEG SHIELD (LH)

REMOVAL

- Remove the floor mat (LH).
- Remove the side leg shield (LH) ①.

INSTALLATION

Installation is in the reverse order of removal.

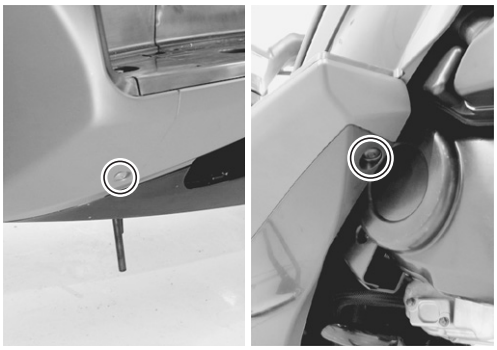

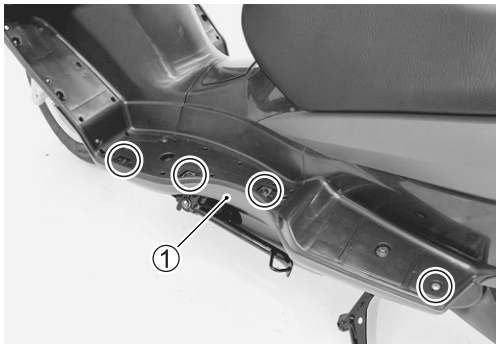

SIDE LEG SHIELD (RH)

REMOVAL

- Remove the floor mat (RH).
- Remove the battery cover ①.
- Remove the side leg shield (RH) ②.

INSTALLATION

Installation is in the reverse order of removal.

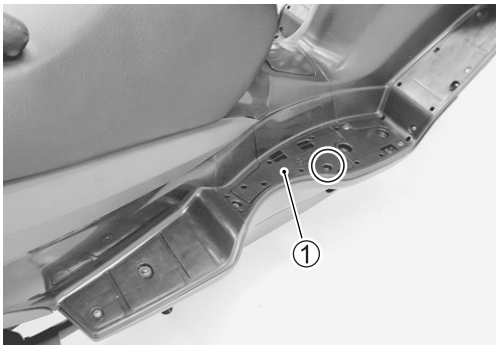

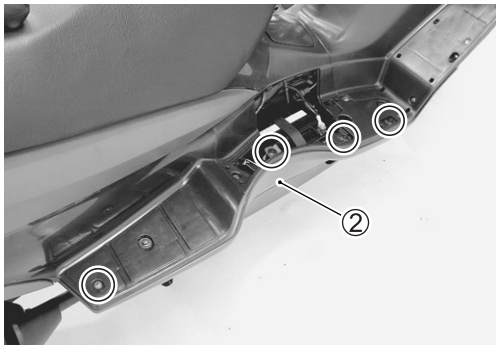

REAR LOWER LEG SHIELD

REMOVAL

- Remove the side leg shields. (☞8-7 and -8)
- Remove the rear lower leg shield ①.

INSTALLATION

Installation is in the reverse order of removal.

FRONT FRAME COVER

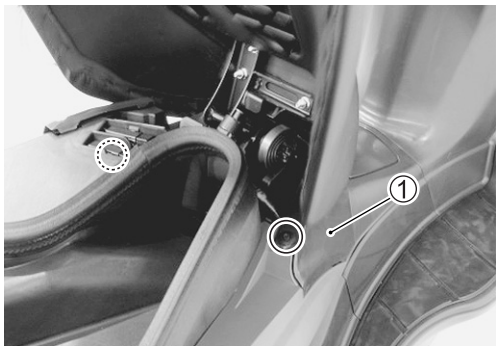

REMOVAL

- Open the seat.
- Remove the front frame cover ①.

INSTALLATION

Installation is in the reverse order of removal.

SEAT

REMOVAL

- Open the seat.
- Remove the seat by removing the three nuts.

INSTALLATION

Installation is in the reverse order of removal.

PILLION RIDER HANDLES

REMOVAL

- Open the seat.
- Remove the pillion rider handles ① (LH and RH).

INSTALLATION

Installation is in the reverse order of removal.

LOWER FRAME COVER

REMOVAL

- Remove the screws and pull out the lower frame cover ①.

☆: indicates hook location

INSTALLATION

Installation is in the reverse order of removal.

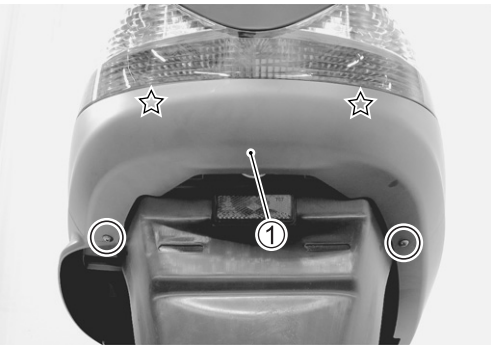

FRAME COVER

REMOVAL

- Remove the front frame cover. (☞8-8)
- Remove the lower frame cover. (☞Above)
- Disconnect the rear combination light coupler ①.
- Remove the frame covers along with the rear combination light and rear footboards.

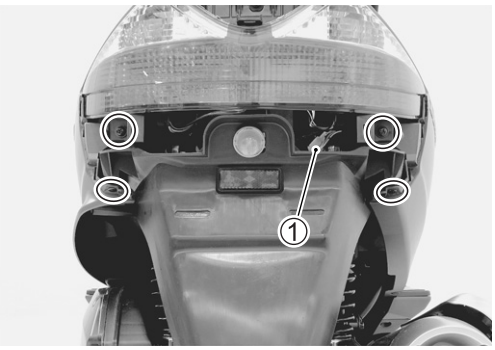

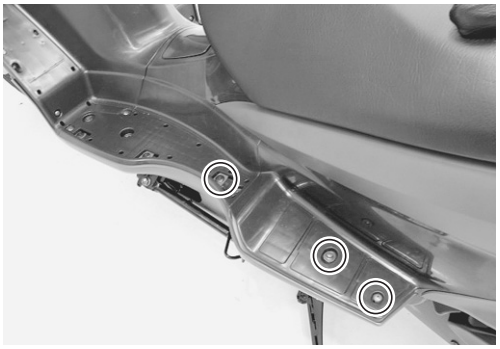

- Remove the rear combination light ②, upper frame cover ③ and rear footboards ④ (LH and RH) from the frame covers ⑤ (LH and RH).

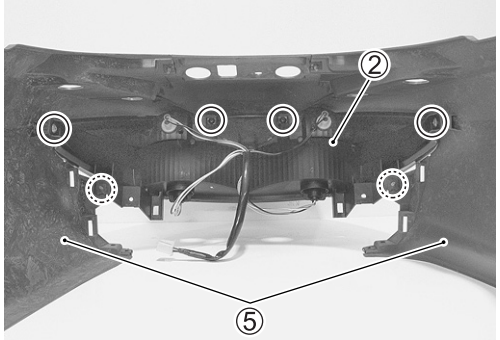

INSTALLATION

Installation is in the reverse order of removal.

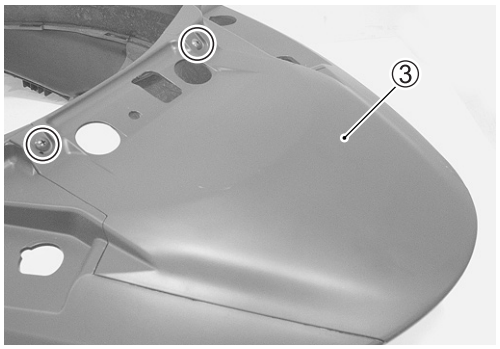

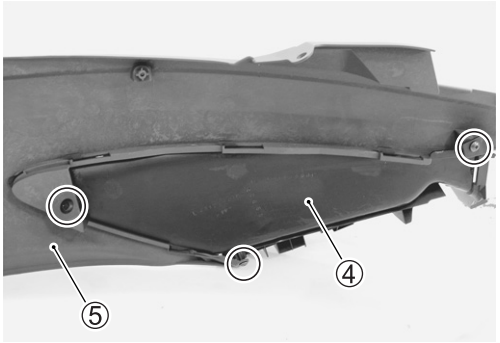

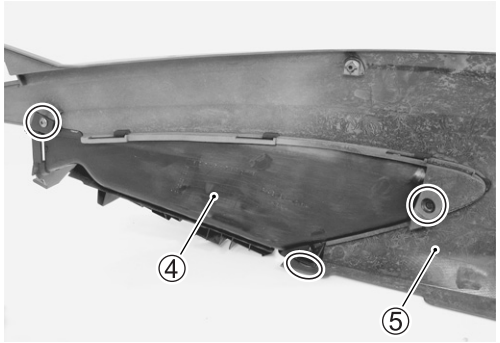

TRUNK BOX

REMOVAL

- Remove the frame covers. (☞8-10)
- Remove the main fuse ①, ECM ②, brake switch relay ③ and main relay ④ from the upper trunk box.

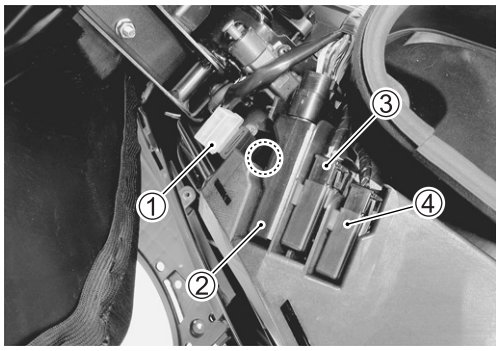

NOTE:
Do not disconnect the ECM and relay couplers.

- Remove the screw under the ECM.
- Disconnect the trunk box light coupler ⑤.
- Remove the trunk box assembly.

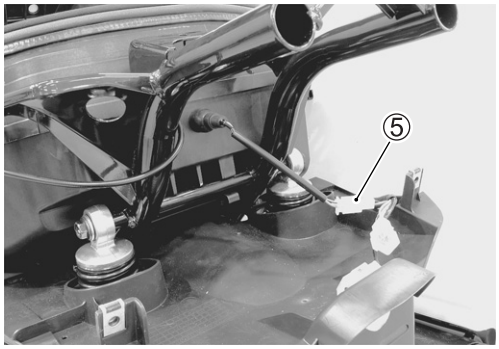

- Separate the trunk box assembly into the upper and lower trunk boxes.

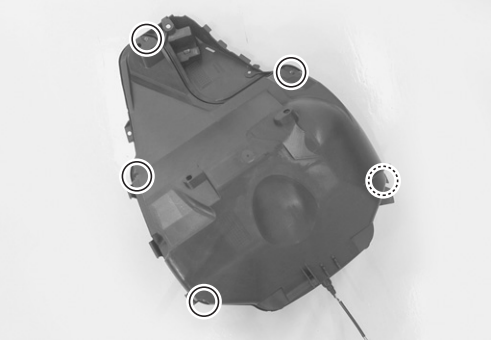

INSTALLATION

Installation is in the reverse order of removal.

FOOTBOARD

REMOVAL

- Remove the front frame cover. (☞8-8)
- Remove the floor mats.
- Remove the side leg shields. (☞8-7 and -8)
- Remove the frame covers. (☞8-10)
- Remove the battery and stater relay ①.

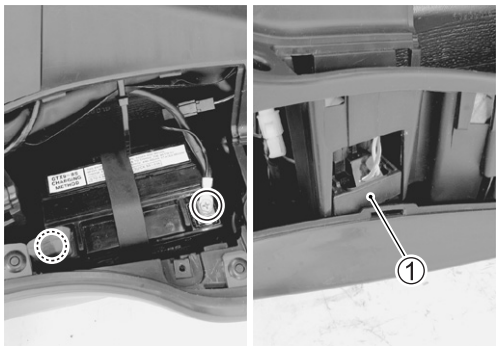

- Remove the screws (6 pcs) and bolts (4 pcs).
- Remove the fuel tank cap ②.

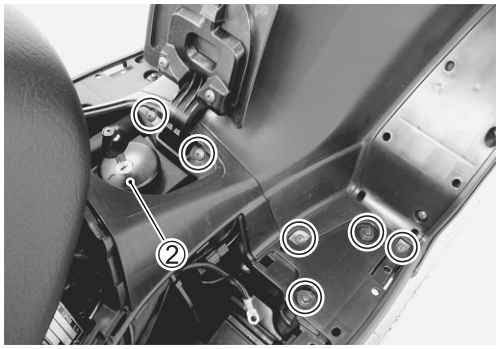

- Disconnect the water drain hose ③.
- Remove the footboard ④.

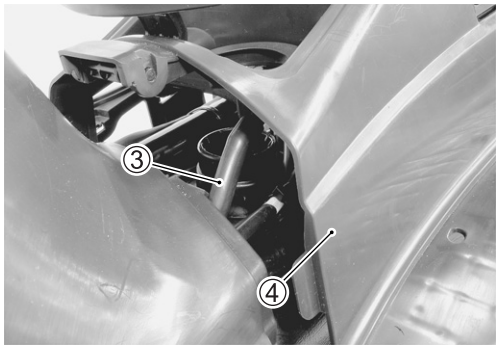

INSTALLATION

Installation is in the reverse order of removal.

FRONT BOX

REMOVAL

- Remove the windscreen. (☞8-4)
- Remove the handlebars. (☞8-20)
- Remove the front leg shield. (☞8-6)
- Remove the side leg shields. (☞8-7 and -8)
- Remove the frame covers. (☞8-10)
- Remove the footboard. (☞8-12)
- Remove the screws and disconnect the output terminal lead wires ①.

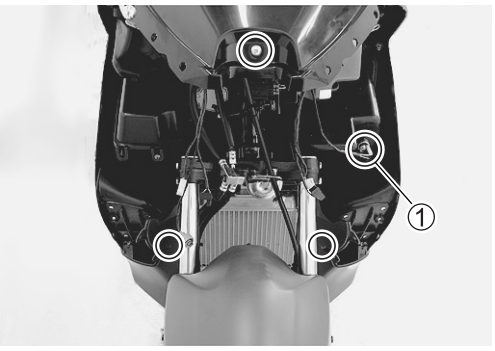

- Disconnect the speedometer couplers ② and cable ③.
- Remove the screws.

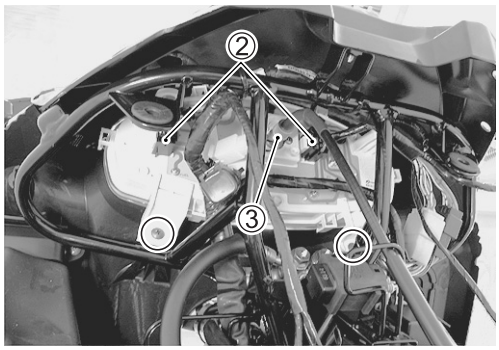

- Remove front box ④ along with the speedometer and lower meter panel.

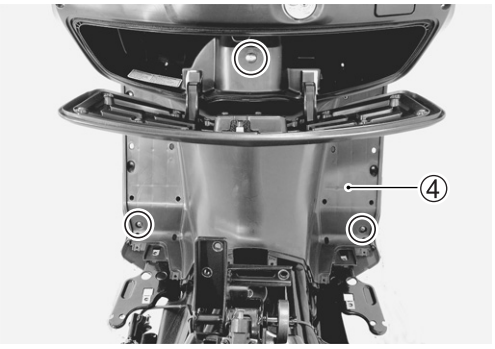

INSTALLATION

Installation is in the reverse order of removal.

FRONT WHEEL
CONSTRUCTION

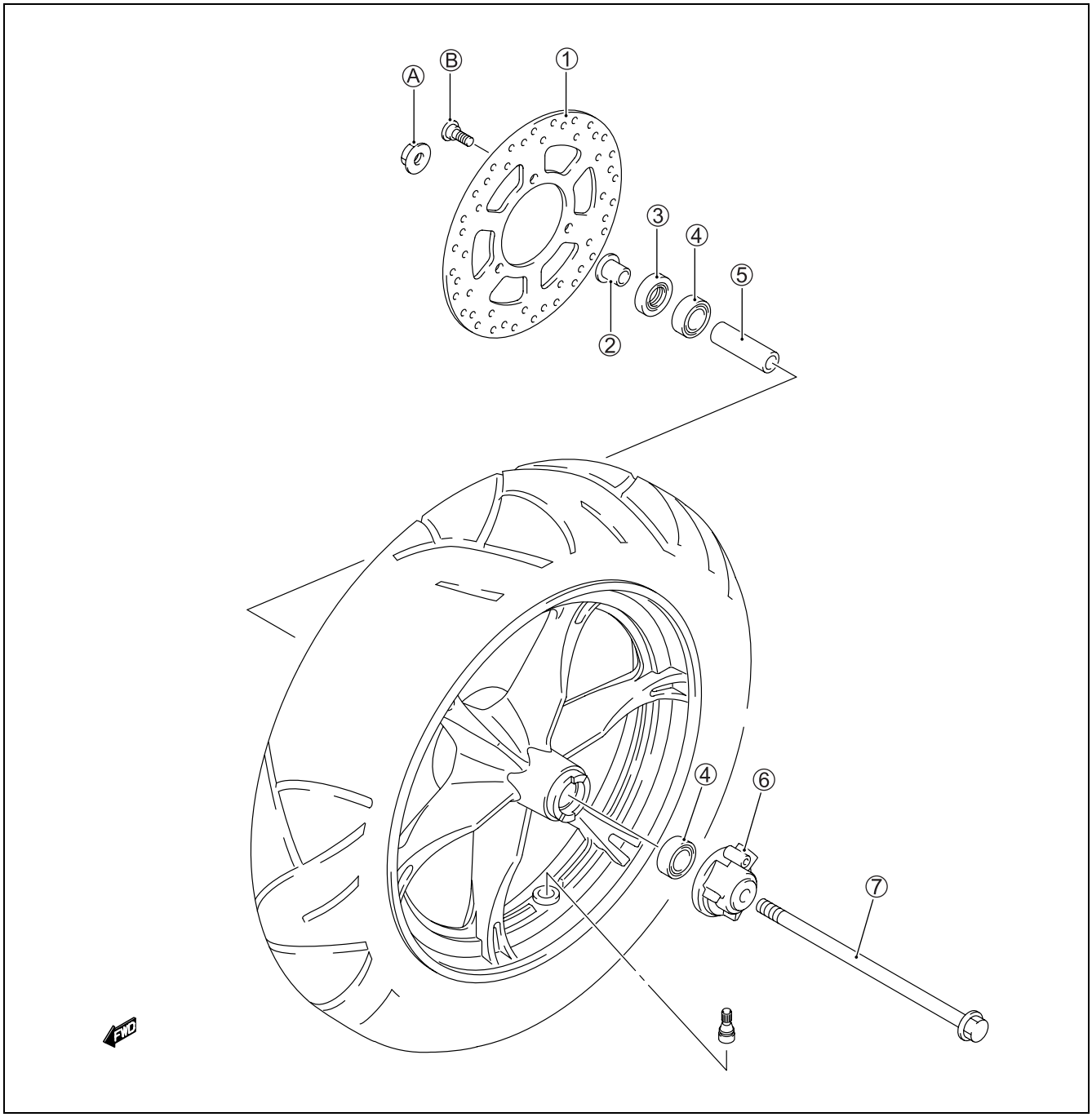

①	Brake disc	⑥	Speedometer gear box
②	Collar	⑦	Front axle
③	Dust seal	Ⓐ	Front axle nut
④	Bearing	Ⓑ	Brake disk bolt
⑤	Spacer		

ITEM	N·m	kgf-m
Ⓐ	44	4.4
Ⓑ	23	2.3

REMOVAL

- Support the motorcycle with the center stand.
- Remove the axle nut ①.
- Lift the front wheel off the ground using a jack.

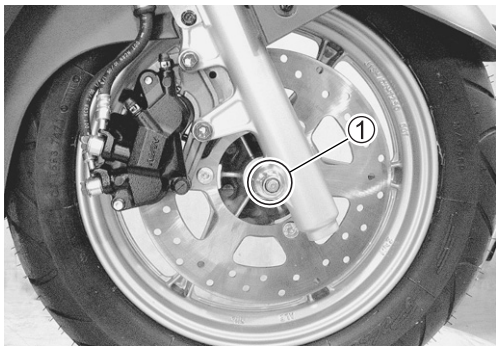

CAUTION

*** Make sure that the motorcycle is securely supported.**
*** Do not operate the front brake lever while front wheel is removed.**

- Draw out the axle shaft and remove the front wheel.

- Remove the collar ②.

INSPECTION AND DISASSEMBLY

TIRE (☞8-52)

BRAKE DISK (☞8-42)

WHEEL

- Make sure that the wheel runout checked as shown does not exceed the service limit. An excessive runout is usually due to worn or loosened wheel bearings and can be reduced by replacing the bearings. If bearing replacement fails to reduce the runout, replace the wheel.

DATA **Wheel runout:**
Service Limit (Axial and Radial): 2.0 mm

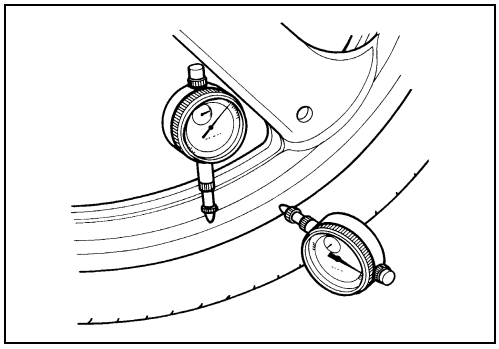

WHEEL BEARINGS

- Inspect the play of the wheel bearings by finger while they are in the wheel. Rotate the inner race by finger to inspect for abnormal noise and smooth rotation.
- Replace the bearing in the following procedure if there is anything unusual.

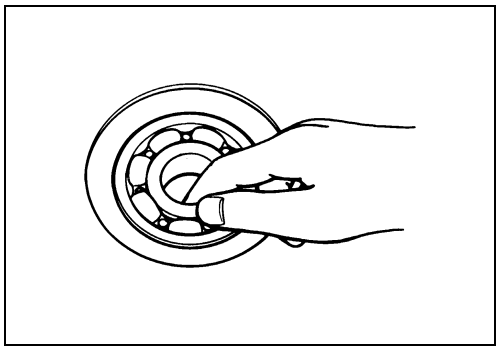

- Remove the dust seal ③.

TOOL 09913-50121: Oil seal remover

CAUTION

The removed dust seal must be replaced with a new one.

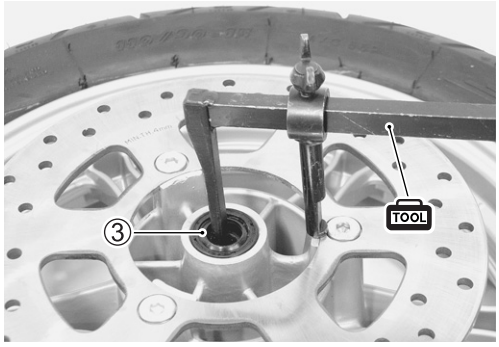

- Remove the bearing.

TOOL 09921-20240: Bearing remover set

CAUTION

The removed bearing must be replaced with a new one.

- Remove the brake disc.

AXLE SHAFT

- Using a dial gauge, check the axle shaft for runout.
- If the runout measured exceeds the service limit, replace the axle shaft.

DATA Front axle runout:
Service Limit: 0.25 mm

TOOL 09900-20607: Dial gauge (1/100 mm)
09900-20701: Magnetic stand
09900-21304: V-block (100 mm)

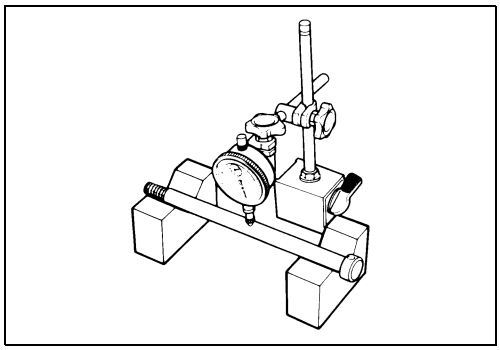

SPEEDOMETER GEARBOX

Turn the speedometer gear ① and check that the gear turns smoothly together with the speedometer pinion ②.

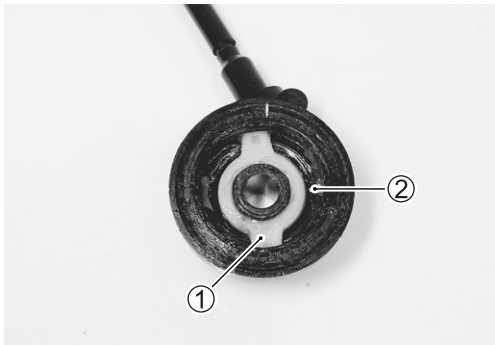

REASSEMBLY AND INSTALLATION

To reassemble the front wheel, reverse the sequence of disassembly procedures while observing the following instructions.

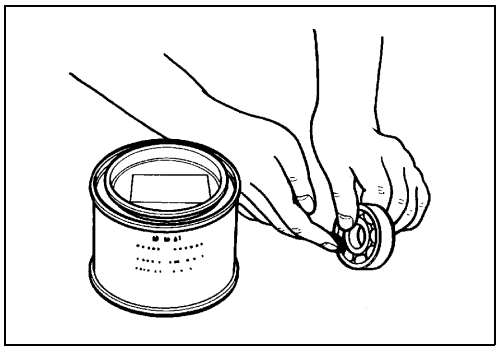

WHEEL BEARING

- Apply grease to the wheel bearings.

99000-25010: SUZUKI SUPER GREASE "A" or equivalent

- Install the wheel bearing with the special tool.
- Insert the spacer and install the left bearing.

09924-84521: Bearing installer set

CAUTION

*** Replace the bearing with a new one.**
*** Position the sealed side of bearing facing outside.**
*** Use care not to allow the spacer to skew.**

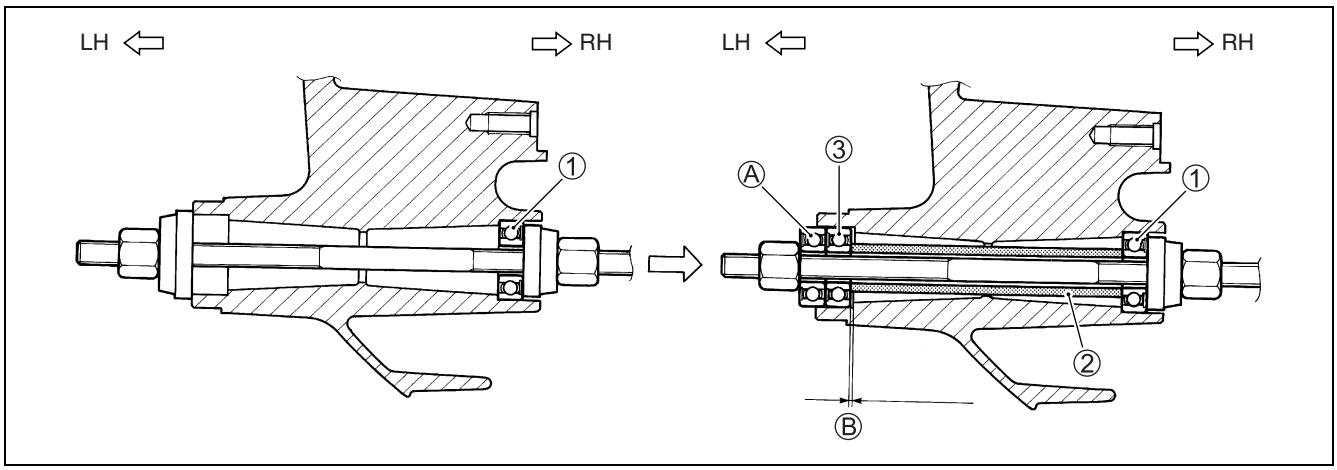

①	New bearing (RH)	Ⓐ	Old bearing
②	Spacer	Ⓑ	Clearance
③	New bearing (LH)		

BREAK DISC

- Apply THREAD LOCK SUPER to the brake disc bolts and tighten them to the specified torque.

99000-32130: THREAD LOCK SUPER "1360" or equivalent

Brake disc bolt: 23 N·m (2.3 kgf-m)

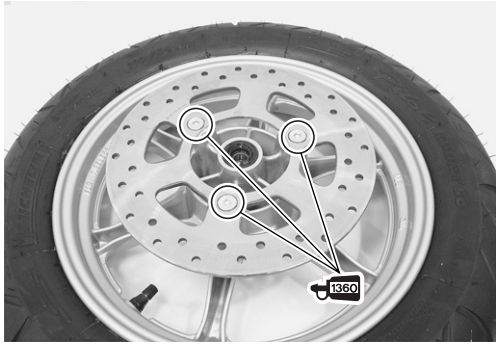

WARNING

Keep the brake disc clean, free from dirt and grease.

DUST SEAL

- Install the new dust seal using the special tool.

09913-70210: Bearing installer set (30mm)

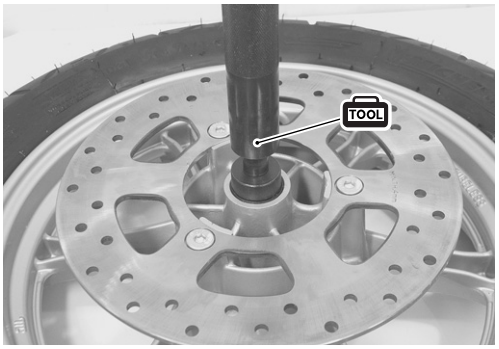

- Apply grease to the dust seal lip.
- Apply grease to the collar and install the collar straight to prevent the dust seal lip from damage.

99000-25010: SUZUKI SUPER GREASE "A"
or equivalent

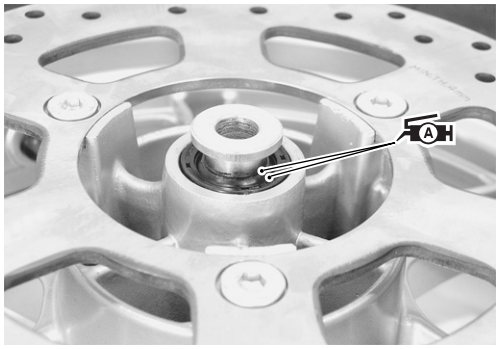

SPEEDOMETER GEARBOX

- Apply grease to the speedometer gear and dust seal lip.

99000-25010: SUZUKI SUPER GREASE "A"
or equivalent

- With the recesses on the wheel engaged with the drive lugs on the speedometer gear, position the wheel to the front fork while also aligning the speedometer gear box with the fork stopper.

FRONT AXLE

- Move the front fork up and down 4 or 5 times.
- Tighten the front axle nut ① to the specified torque.

Front axle nut: 44 N·m (4.4 kgf-m)

NOTE:
After remounting the front wheel, pump the brake lever a few times to check for proper brake operation.

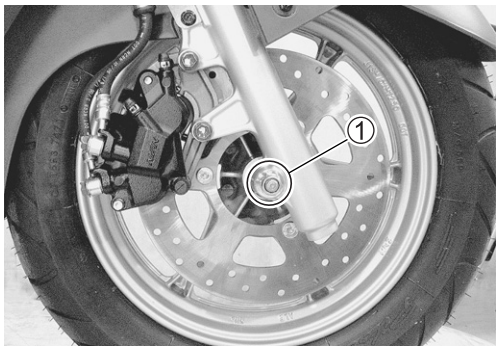

HANDLEBARS
CONSTRUCTION

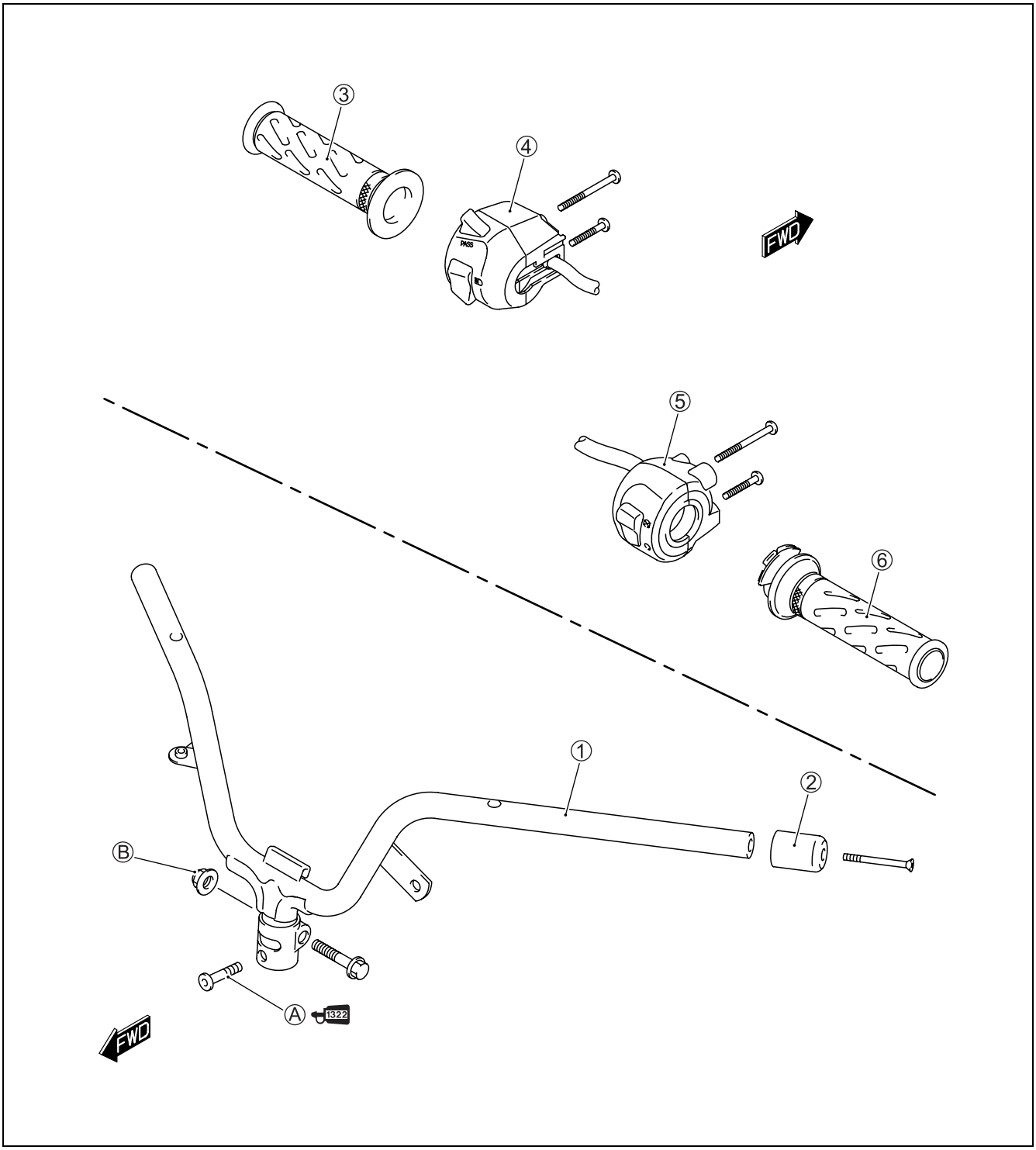

①	Handlebars	⑤	Right handlebar switch box
②	Handlebar balancer	⑥	Throttle grip
③	Left grip rubber	Ⓐ	Handlebar set bolt
④	Left handlebar switch box	Ⓑ	Handlebar clamp nut

ITEM	N·m	kgf-m
Ⓐ	25	2.5
Ⓑ	50	5.0

REMOVAL

- Remove the handlebar covers. (☞8-4)
- Remove the following items from the handlebars.
  ① Handlebar balancer
  ② Left handlebar switch box
  ③ Rear brake light switch lead wires
  ④ Rear brake master cylinder
  ⑤ Grip rubber

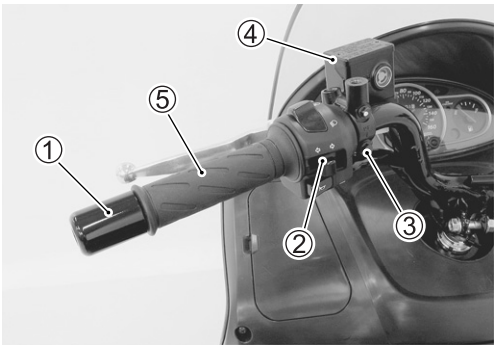

  ⑥ Handlebar balancer
  ⑦ Right handlebar switch box
  ⑧ Throttle grip
  ⑨ Front brake light switch lead wires
  ⑩ Front brake master cylinder

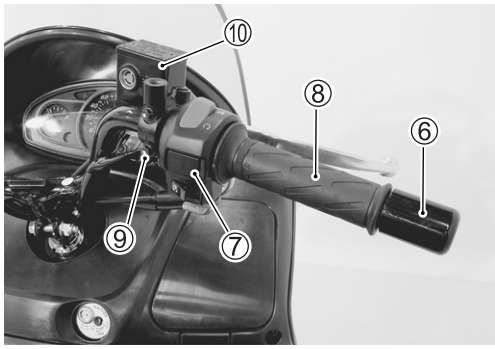

CAUTION

Do not turn the brake master cylinders upside down.

- Remove the clamp ⑪.
- Remove the handlebar set bolt ⑫ and clamp bolt ⑬.
- Remove the handlebars.

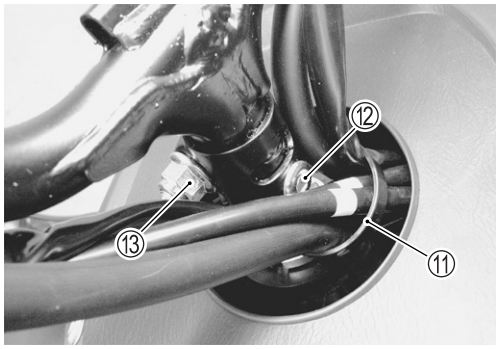

INSTALLATION

Installation is in the reverse order of removal. Pay attention to the following points:

- Tighten the handlebar set bolt ① and clamp nut ② to the specified torque.

Handlebar set bolt: 25 N·m (2.5 kgf-m)
Handlebar clamp nut: 50 N·m (5.0 kgf-m)

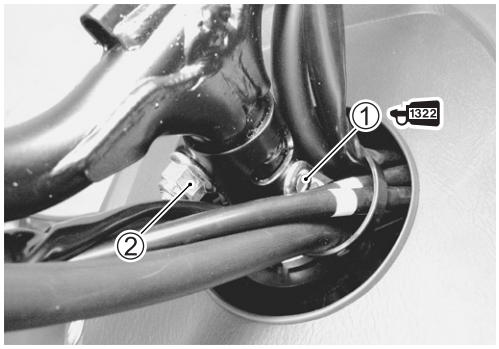

CAUTION

Apply THREAD LOCK SUPER to the handlebar set bolt.

1322 99000-32110: THREAD LOCK SUPER "1322" or equivalent

- Apply grease to the hatched area Ⓐ before installing the throttle grip ①.

Ⓐ: 135 mm

99000-25010: SUZUKI SUPER GREASE "A" or equivalent

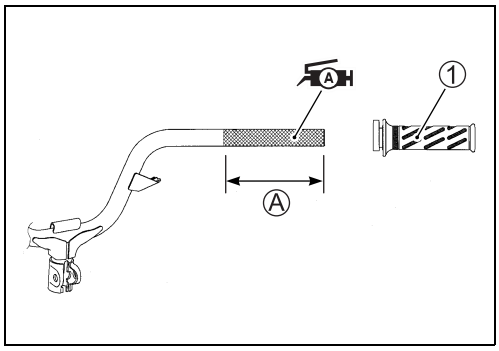

- Insert the projection Ⓐ of the right handlebar switch into the hole of the handlebar.
- Apply grease to the throttle cables and cable pulley.

99000-25010: SUZUKI SUPER GREASE "A" or equivalent

- Install the front brake master cylinder. (☞8-45)

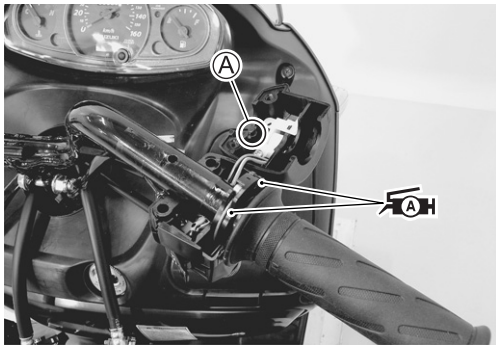

- Apply handle grip bond to the left handlebar end Ⓑ before installing the left handlebar grip rubber.

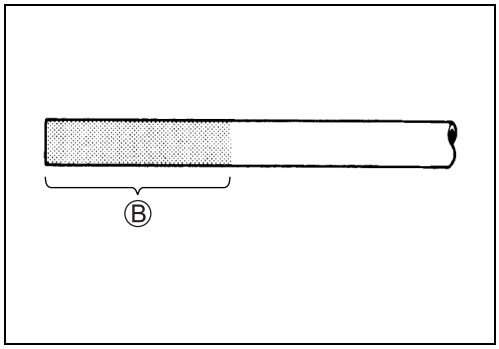

- Insert the projection Ⓒ of the left handlebar switch box into the hole of the handlebars.
- Install the rear brake master cylinder. (☞8-50)

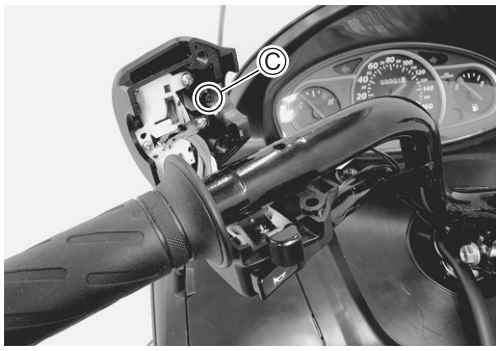

After installing the handlebars, the following adjustments are required before riding.

- Wiring harness, cable and hose routing. (☞10-15, -17 and -19)
- Throttle cable play (☞2-11)

FRONT FORK
CONSTRUCTION

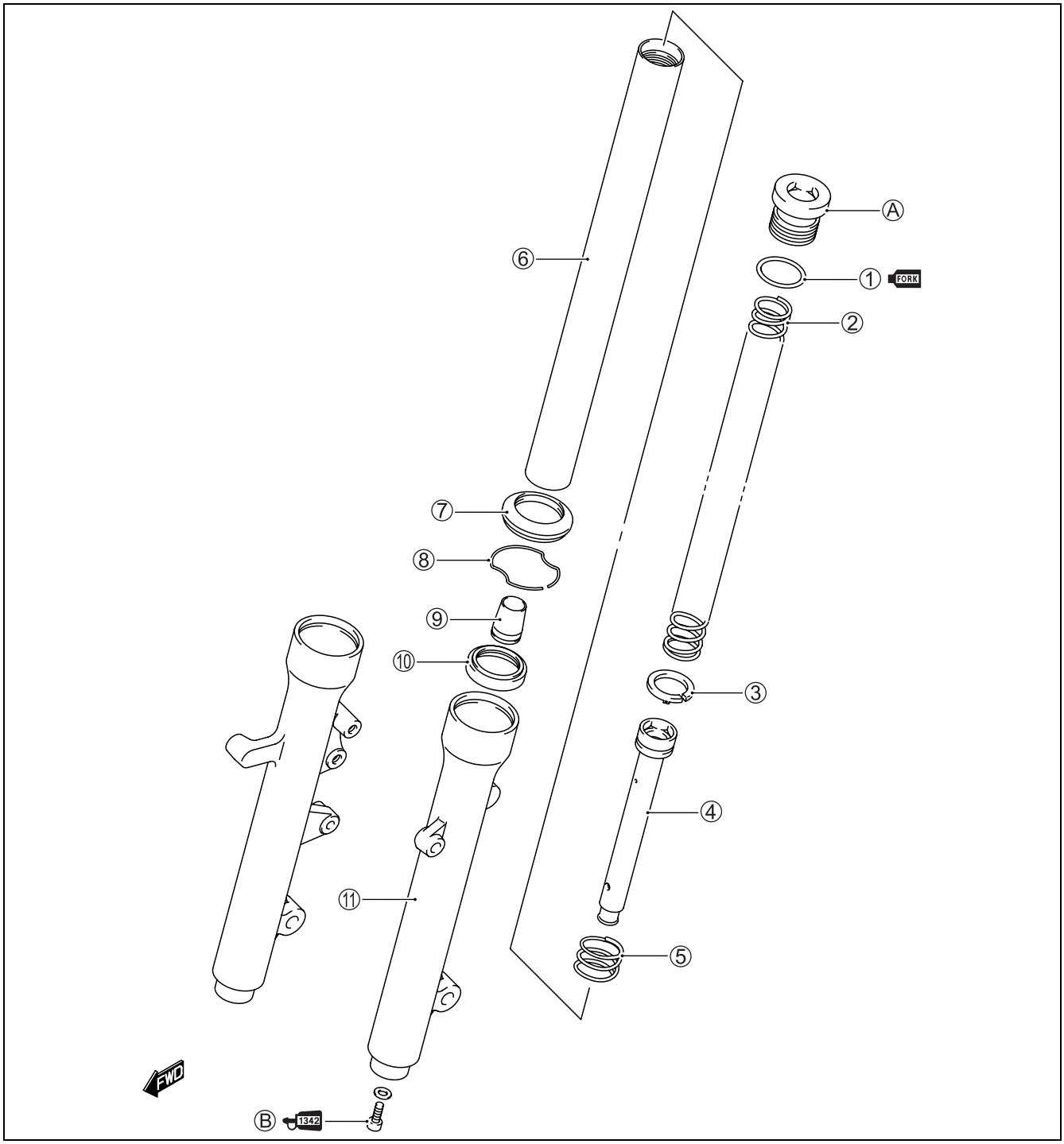

①	O-ring	⑧	Oil seal stopper ring
②	Front fork spring	⑨	Oil lock piece
③	Damper rod ring	⑩	Oil seal
④	Damper rod	⑪	Outer tube
⑤	Damper rod spring	Ⓐ	Front fork cap bolt
⑥	Inner tube	Ⓑ	Damper rod bolt
⑦	Dust seal		

ITEM	N·m	kgf-m
Ⓐ	45	4.5
Ⓑ	30	3.0

REMOVAL AND DISASSEMBLY

- Remove the front leg shield. (☞8-6)
- Dismount the front wheel. (☞8-15)
- Remove the brake caliper and brake hose guide.

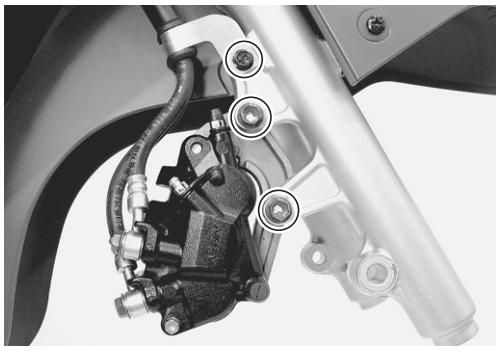

- Remove the speed meter cable guide ①.

CAUTION

Hang the brake caliper on the frame with a string etc., taking care not to bend the brake hose.

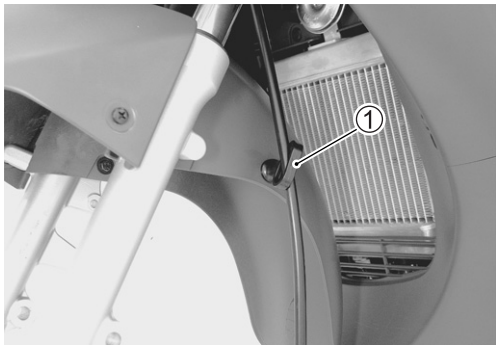

- Remove the front fender.

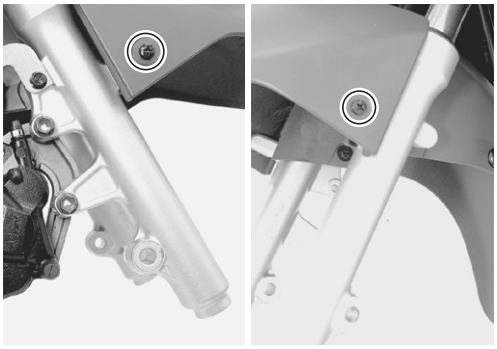

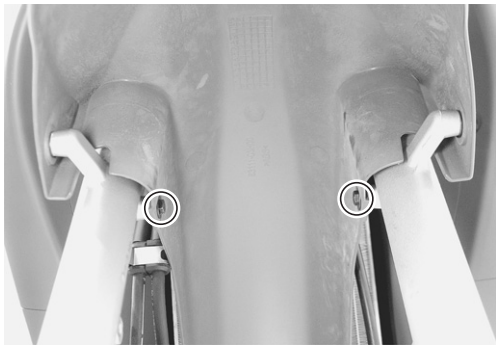

- Remove the front fork cap bolt ② using the special tool.

TOOL 09940-30230: Socket hexagon (17 mm)

- Remove the front fork clamp bolts ③.
- Remove the front fork.

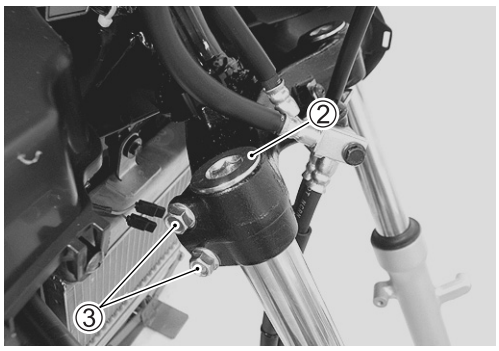

- Remove the front fork spring ④ and drain front fork oil.

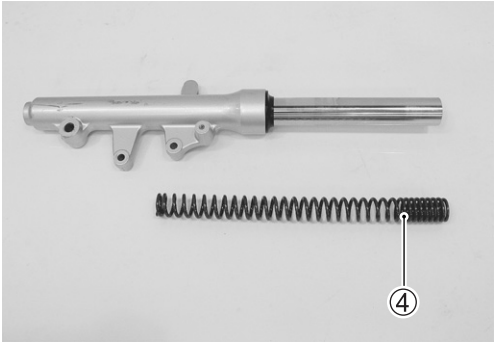

- Remove the damper rod bolt using the special tools.

TOOL 09940-34520: T-Handle
09940-34531: Attachment (A)

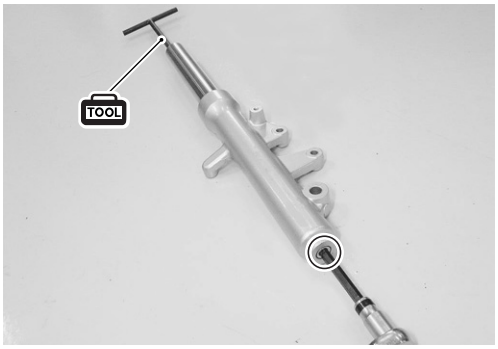

- Remove the inner tube ⑤ and oil lock piece ⑥ from the outer tube.

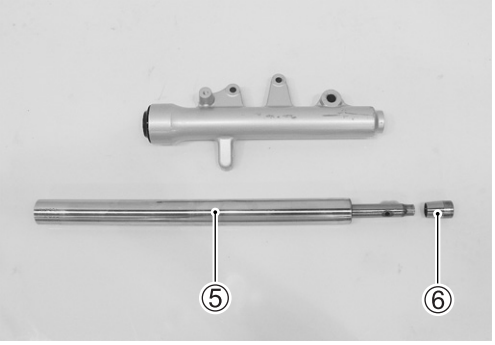

- Remove the damper rod ⑦ and spring ⑧ from the inner tube.

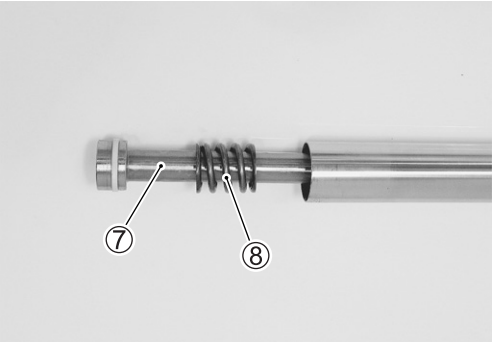

- Remove the dust seal ⑨.

CAUTION

The removed dust seal must be replaced with a new one.

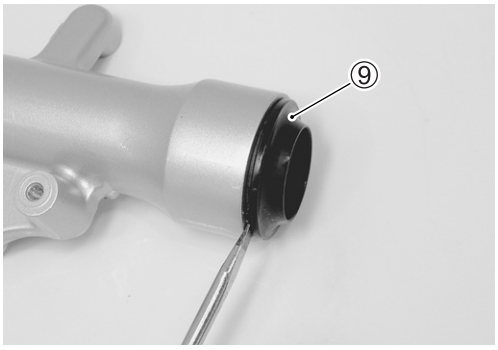

- Remove the oil seal stopper ring ⑩.

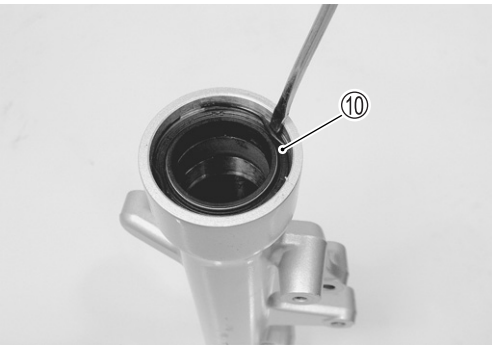

- Remove the oil seal ⑪.

TOOL 09913-50121: Oil seal remover

CAUTION

The removed oil seal must be replaced with a new one.

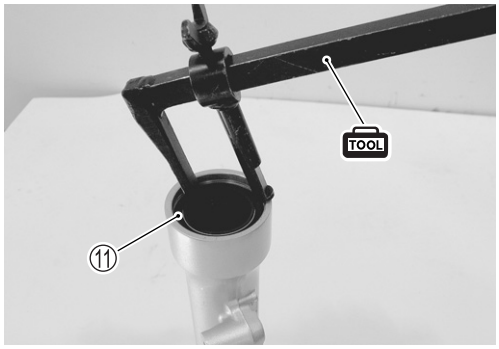

INSPECTION

FRONT FORK SPRING

Measure the free length Ⓐ of the front fork spring.
If the length is found shorter than the service limit, replace the spring with a new one.

DATA Front fork spring free length
Service Limit: 306 mm

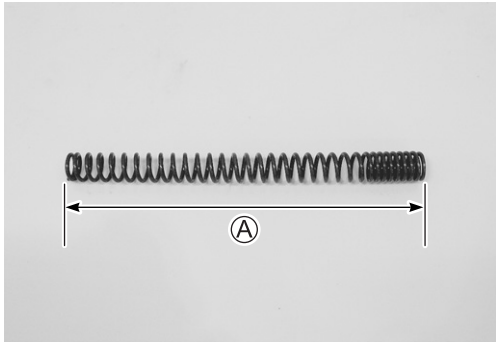

INNER TUBE AND OUTER TUBE

Check the sliding surface of the inner tube, outer tube and damper rod ring for scratch, wear, bending, or other abnormal condition.
If any abnormal condition is found, replace it with a new one.

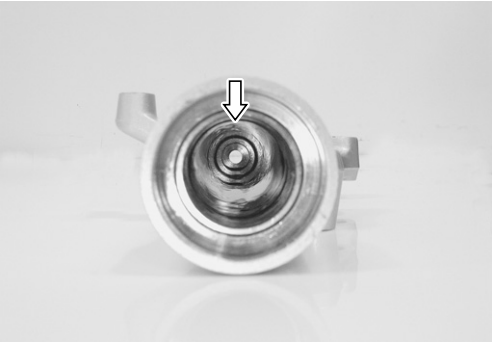

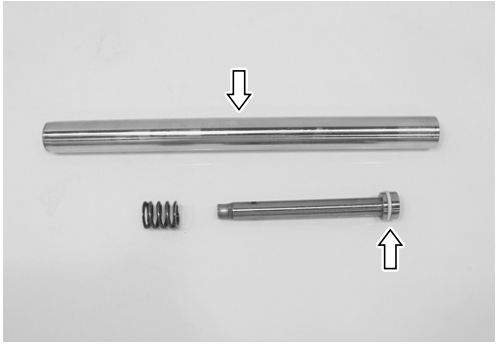

REASSEMBLY

Reassemble and remount the front fork in the reverse order of removal and disassembly. Pay attention to the following points:

CAUTION

- **Thoroughly wash all the component parts being assembled.**
- **When reassembling the front fork, use new fork oil.**
- **Use the specified fork oil for the front fork.**
- **When reassembling, replace the oil seal, dust seal and damper rod bolt gasket with new ones.**

OIL LOCK PIECE

- With the oil lock piece ① fitted to the damper rod, assemble the inner tube to the outer tube.

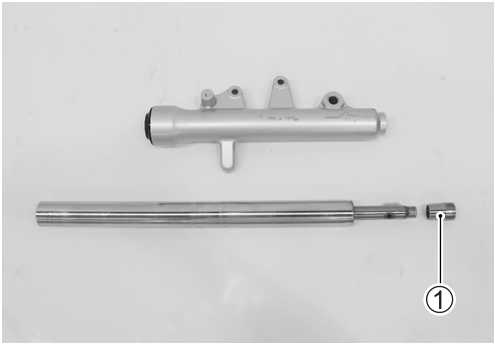

DAMPER ROD BOLT

- Apply THREAD LOCK to the damper rod bolt ②.

1342 99000-32050: THREAD LOCK "1342" or equivalent

- With the gasket ③ fitted, tighten the damper rod bolt ②.

Damper rod bolt: 30 N·m (3.0 kgf-m)

CAUTION

Replace the gasket with a new one.

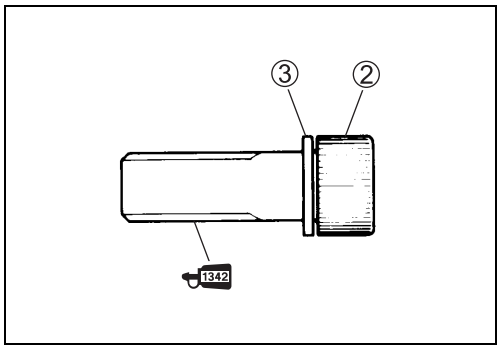

OIL SEAL

- Apply fork oil to the lip of the oil seal ④ and install it into the outer tube using the front fork oil seal installer.

TOOL 09940-52861: Front fork oil seal installer set

CAUTION

Wash clean the front fork oil seal installer before using. If dirt is on the installer, the inner tube may possibly be damaged during press-fitting work.

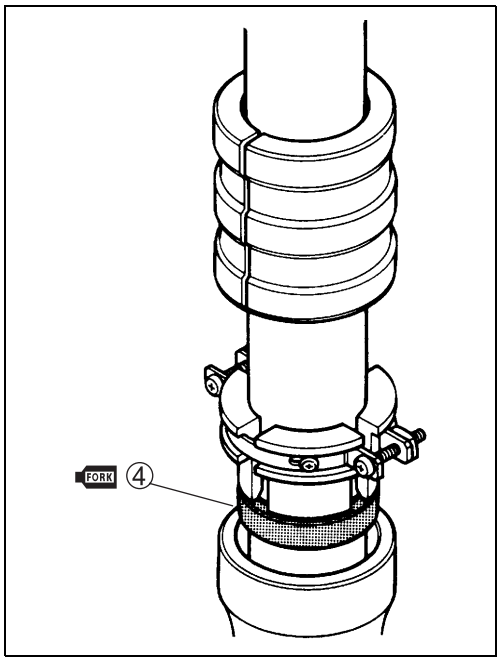

STOPPER RING/DUST SEAL

- Install the oil seal stopper ring ① and dust seal ②.

CAUTION

Make sure that the stopper ring is securely fitted into the groove on the outer tube.

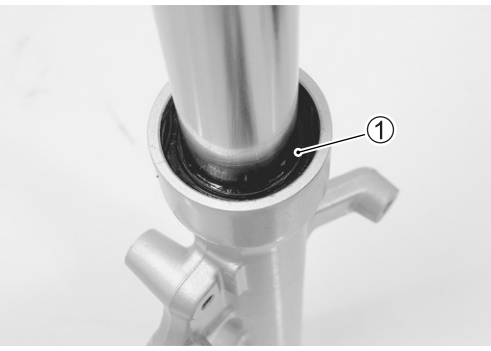

① Oil seal stopper ring
② Dust seal
③ Oil seal
④ Slide metal

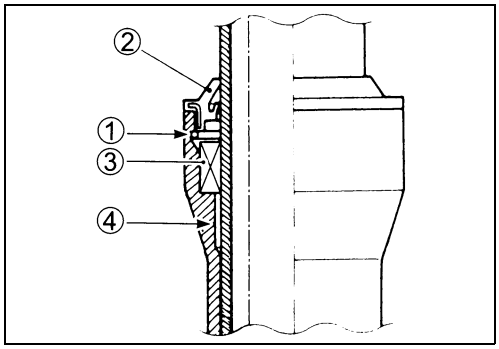

FRONT FORK OIL

- Pour the specified amount of fork oil and stroke the tube several times to expel air.

DATA Capacity (each leg): 141 ml

FORK 99000-99044-10G: FORK OIL G-10

- With the front fork held in vertical position, compress the inner tube all the way.

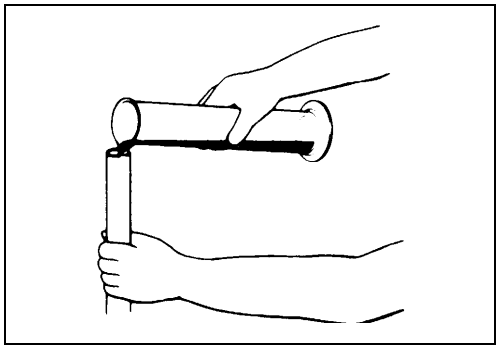

- Wait until the fluid level stabilizes, measure and adjust the level to specification using the special tool.

DATA Oil level (without spring): 101 mm

TOOL 09943-74111: Front fork oil level gauge

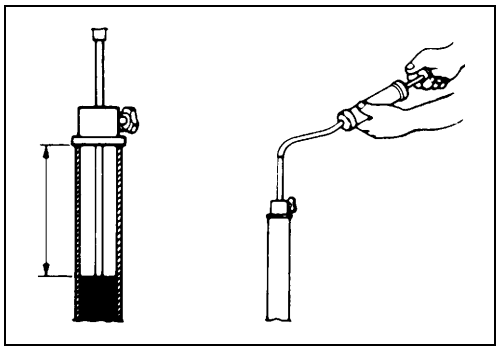

FRONT FORK SPRING

- Install the front fork spring.

NOTE:
The smaller pitch end of the spring must face upward.

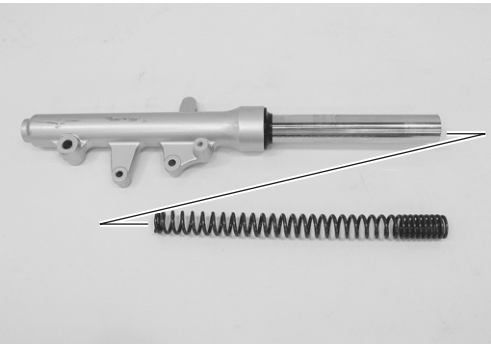

- Insert the front fork inner tube top end into the steering stem all the way until the step of mounting hole has been contacted.
- Tighten the clamp bolts temporarily.

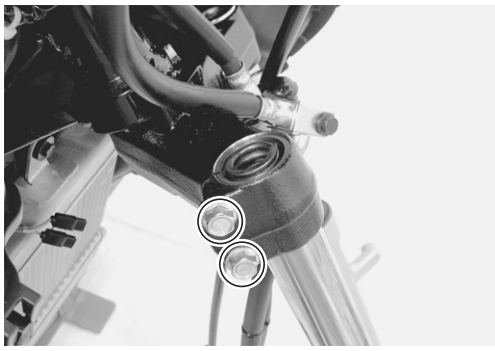

FRONT FORK CAP BOLT

- Install new O-ring to the front fork cap bolt and apply fork oil.
- Install the front fork cap bolt temporarily.

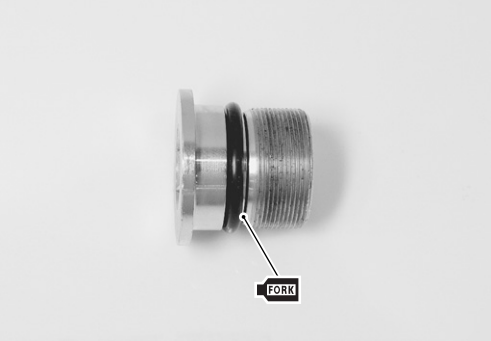

- Tighten the front fork clamp bolts ① to the specified torque.

Front fork clamp bolt: 23 N·m (2.3 kgf-m)

- Tighten the front fork cap ② bolt to the specified torque.

Front fork cap bolt: 45 N·m (4.5 kgf-m)

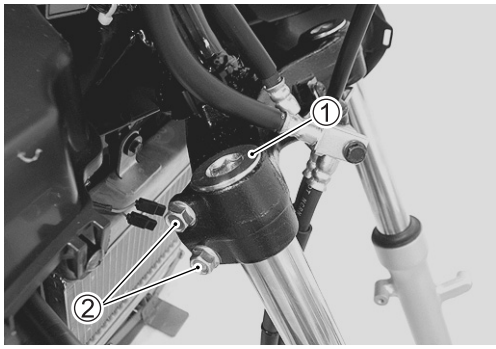

STEERING
CONSTRUCTION

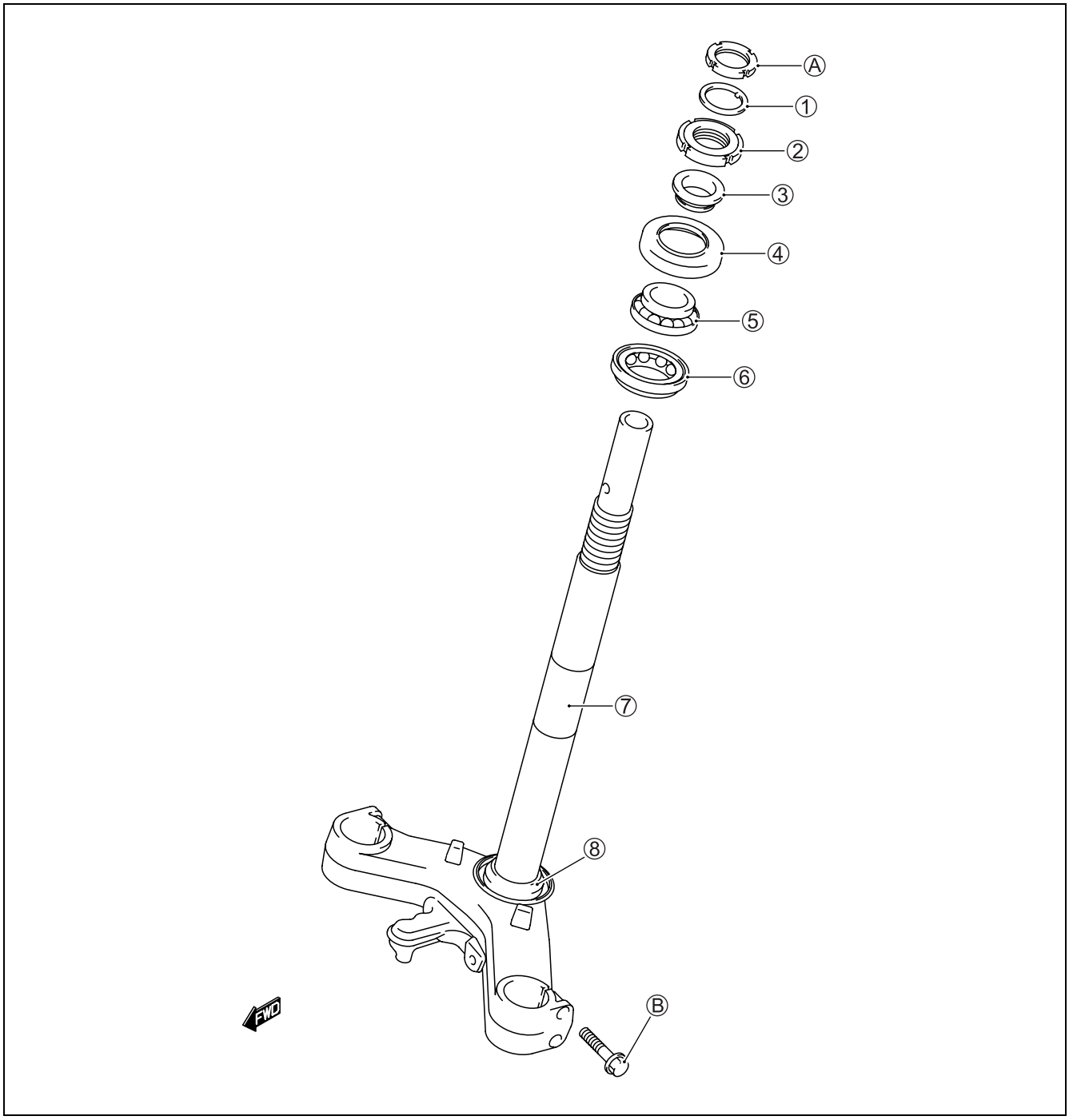

①	Washer	⑥	Lower bearing
②	Steering stem nut	⑦	Steering stem
③	Upper bearing inner race	⑧	Lower bearing inner race
④	Dust cover	Ⓐ	Steering stem lock nut
⑤	Upper bearing	Ⓑ	Front fork clamp bolt

ITEM	N·m	kgf-m
Ⓐ	30	3.0
Ⓑ	23	2.3

REMOVAL AND DISASSEMBLY

- Remove the front leg shield. (☞8-6)
- Remove the front forks. (☞8-23)
- Remove the front brake hose guide ① and speedometer guide ②.

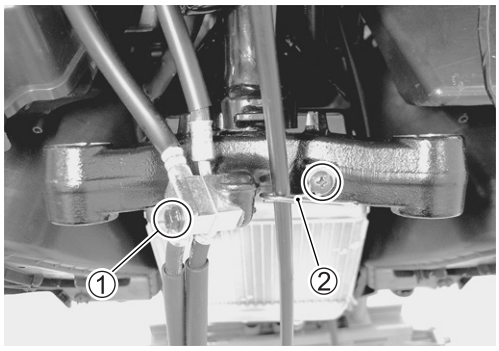

- Remove the clamp ③.
- Remove the handlebar set bolt ④ and clamp bolt ⑤.
- Dismount the handlebars.

CAUTION

This operation must be performed without causing undue stress to the brake hoses.

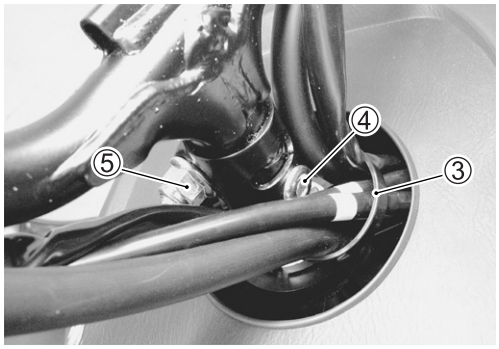

- Remove the steering stem lock nut ⑥, washer ⑦ and steering stem nut ⑧ and draw out the steering stem.

TOOL 09940-14911: Steering socket wrench
09940-11420: Steering stem nut socket
09940-11430: Steering stem nut socket

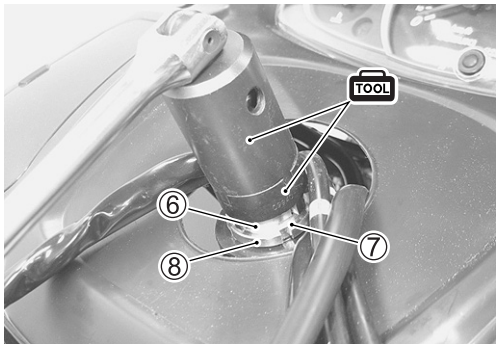

- Remove the dust cover ⑨, upper inner race ⑩ and upper bearing ⑪.

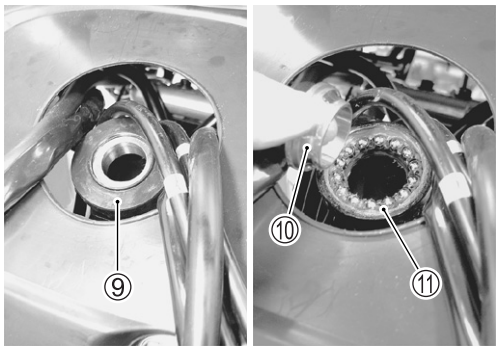

- Remove the lower bearing ⑫.

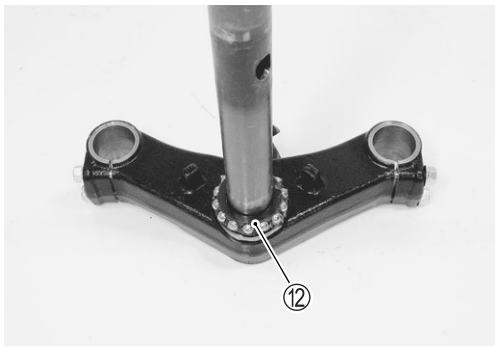

INSPECTION AND DISASSEMBLY

Check the steering stem and steering stem head for any damage.
Check the bearings and races for corrosion, nick or other damage.
If any abnormal condition is noted, replace the damaged part with a new one.

- To remove the lower inner race, use a chisel like, plain head steel rod.

CAUTION

> *** Unless corrosion, damage or other abnormal condition is found, the bearing race need not be replaced.**
> *** Once the lower inner race has been removed, replace it with a new one.**

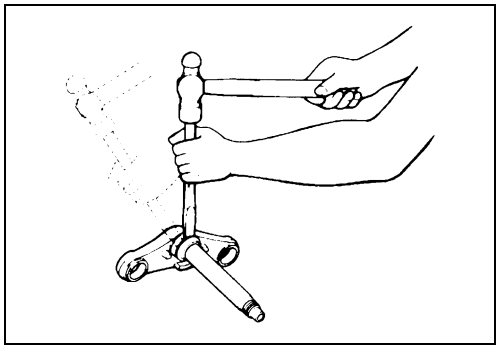

- Remove the steering stem bearing outer races using the special tools.

TOOL 09941-54911: ① Bearing outer race remover
09941-74911: ② Steering bearing installer

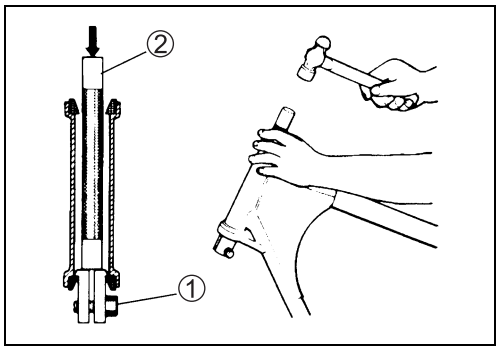

REASSEMBLY

Reassembly and reinstallation can be performed in the reverse order of removal and disassembly procedures. Pay attention to the following points:

- Press in the upper and lower outer race using the special tool.

TOOL 09941-34513: Steering race installer

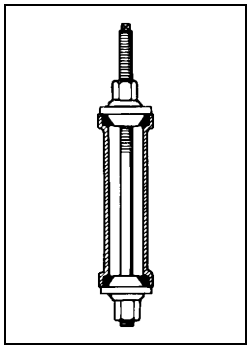

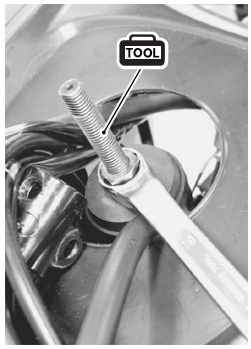

- Install new dust seal.
- Press in the lower stem bearing race ①.

TOOL 09925-18011: Steering bearing installer
09940-51410: Attachment

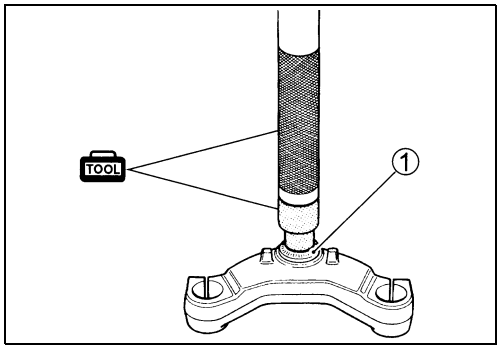

- Apply grease to the upper bearing and upper inner race prior to installing the steering stem.

A H 99000-25010: SUZUKI SUPER GREASE "A" or equivalent

- Install the upper bearing and upper inner races.

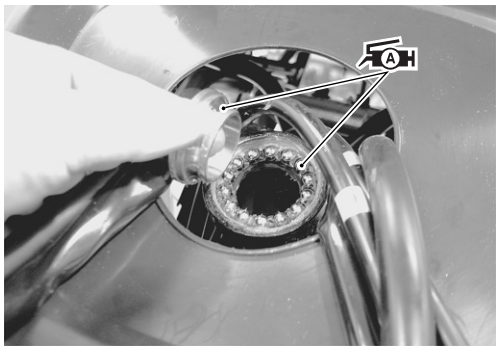

- Apply grease to the lower bearing prior to installing the steering stem.
- Install the steering stem.

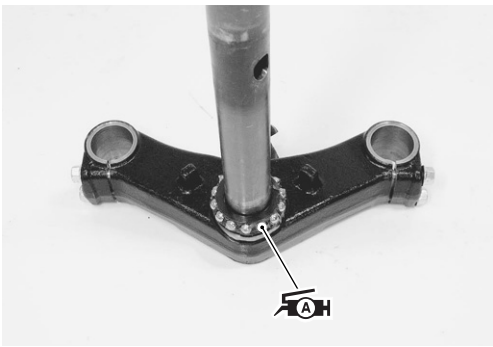

- Tighten the steering stem nut.

Steering stem nut: 45 N·m (4.5 kgf-m)

TOOL 09940-14911: Steering socket wrench
09940-11420: Steering stem nut socket
09940-11430: Steering stem nut socket

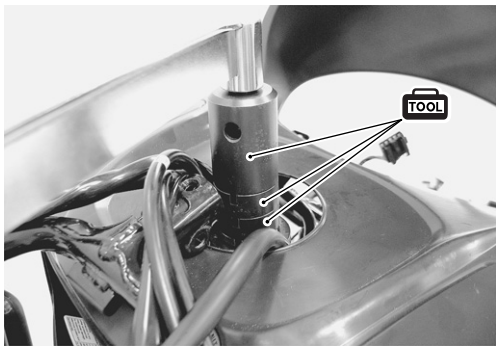

- Turn the steering stem right and left 5 – 6 times to break-in the bearing.
- Return the steering stem nut by 1/4 – 1/2 of a turn.
- In this condition, check that the steering stem can turn smoothly with no rattle and stiffness.
- If there is a rattle or heavy movement, adjust the tightness by the stem nut.

NOTE:
This adjustment will vary from motorcycle to motorcycle.

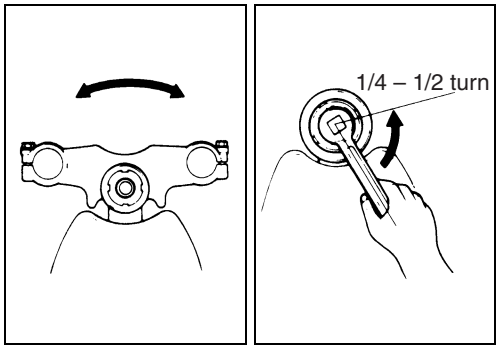

- Fit the washer ② with its tab Ⓐ engaged with the steering stem groove.

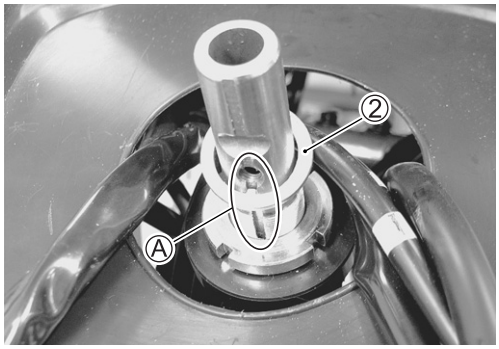

- Tighten the steering stem lock nut to the specified torque with special tools.

Steering stem lock nut: 30 N·m (3.0 kgf-m)

TOOL 09940-14911: Steering socket wrench
09940-11420: Steering stem nut socket

NOTE:
Tightening the steering stem lock nut can affect the steering stem nut adjustment. Therefore, after tightening the steering stem lock nut, check the steering movement again and adjust if necessary.

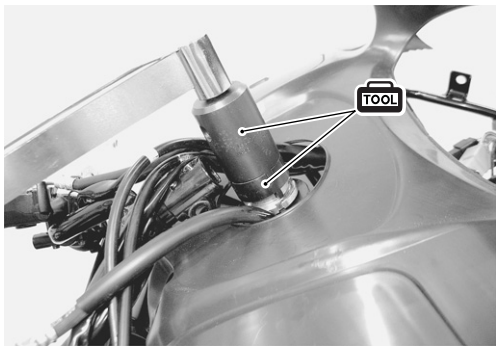

- Tighten the handlebar set bolt ③ and handlebar clamp nut ④ to the specified torque.

Handlebar set bolt: 25 N·m (2.5 kgf-m)
Handlebar clamp nut: 50 N·m (5.0 kgf-m)

CAUTION

Apply THREAD LOCK SUPER to the handlebar set bolt.

1322 99000-32110: THREAD LOCK SUPER "1322" or equivalent

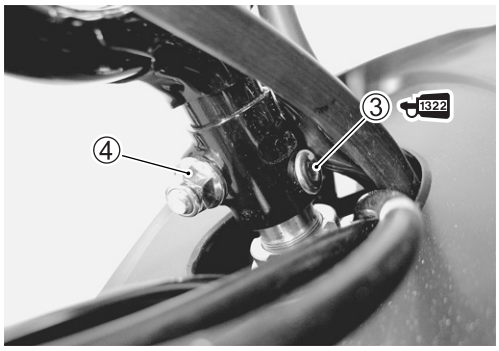

REAR WHEEL
CONSTRUCTION

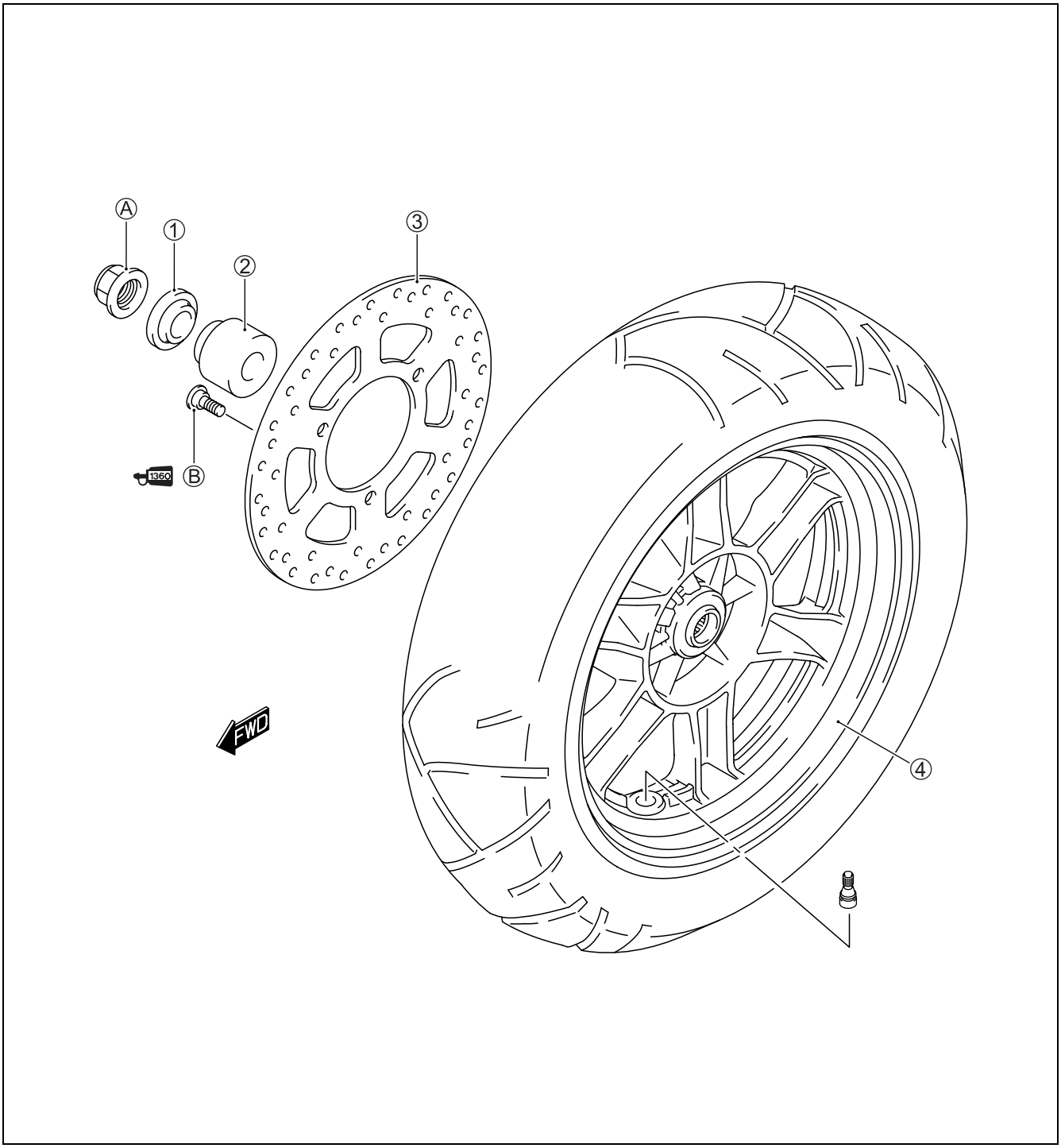

①	Collar	④	Rear wheel
②	Spacer	Ⓐ	Rear axle nut
③	Brake disc	Ⓑ	Brake disk bolt

ITEM	N·m	kgf-m
Ⓐ	120	12.0
Ⓑ	23	2.3

REMOVAL

- Support the motorcycle with the center stand.
- Remove the muffler. (☞6-2)
- Remove the rear brake caliper ①.
- Remove the rear axle nut ② and collar.
- Remove the rear swingarm ③.

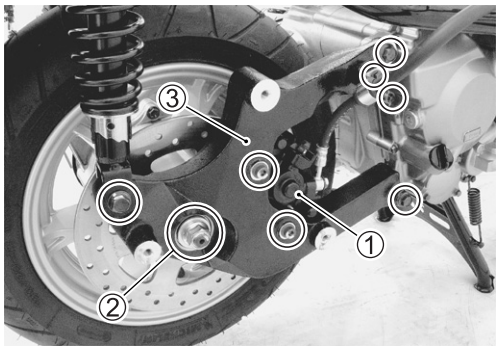

- Remove the spacer ④.
- Remove the rear wheel.

CAUTION

Do not operate the rear brake lever while rear wheel is removed.

- Remove the brake disc. (☞8-16)

INSPECTION

TIRE (☞8-52)

REAR WHEEL

Inspect the rear wheel for wear or damage. If any defects are found, replace the wheel with new one.

AXLE SHAFT (☞3-50)

INSTALLATION

Install the rear wheel in the reverse order of removal. Pay attention to the following points:

- Install the rear wheel and rear swingarm ①.

Rear axle nut: 120 N·m (12.0 kgf-m)
Rear brake caliper mounting bolt: 26 N·m (2.6 kgf-m)

- Install the muffler. (☞6-3)

NOTE:
After remounting the rear wheel, pump the brake lever a few times to check for proper brake operation.

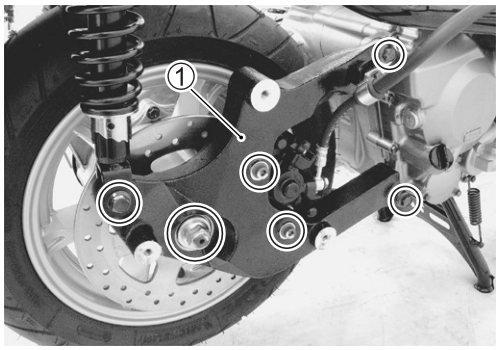

FRONT BRAKE
CONSTRUCTION

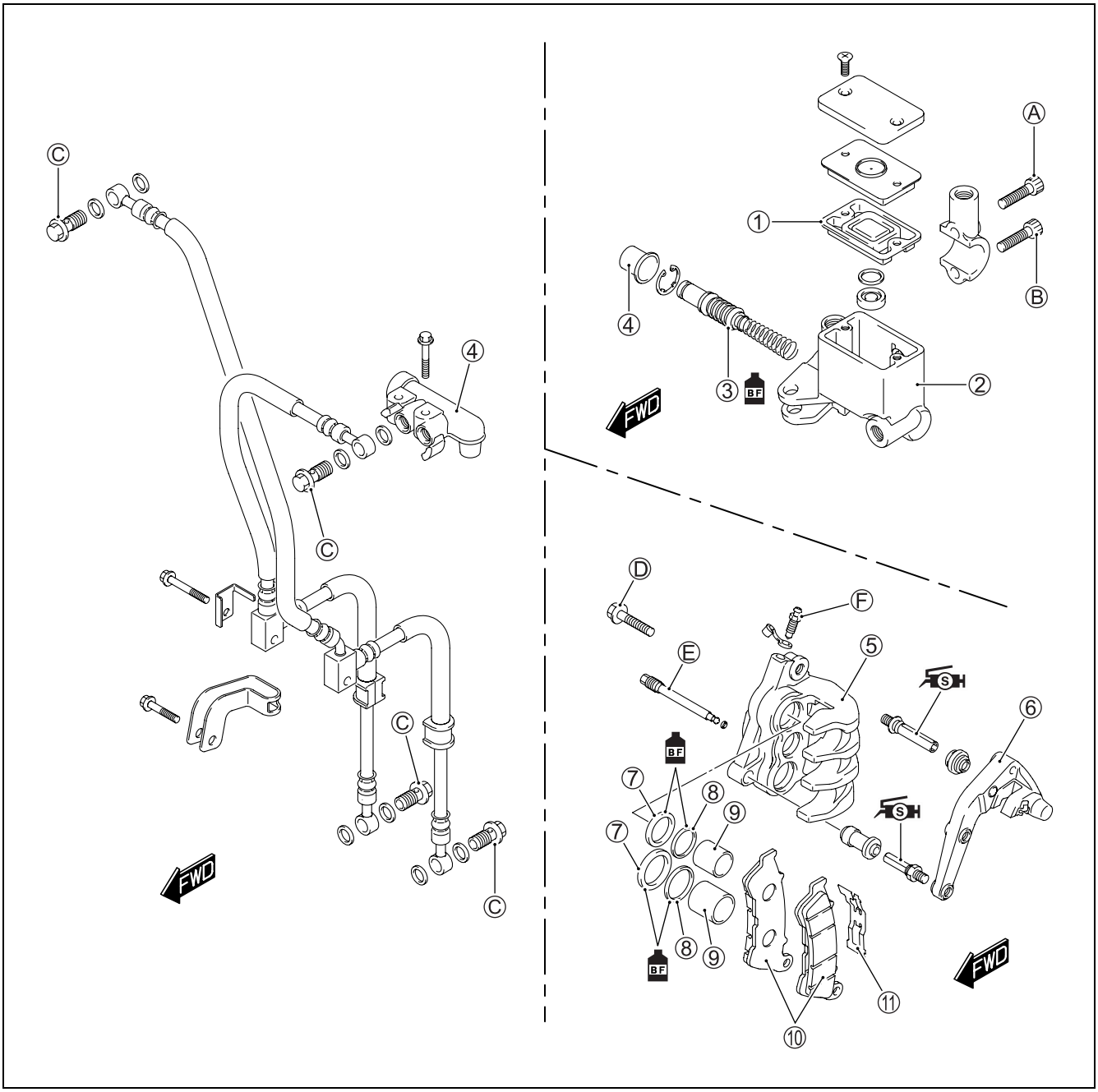

①	Diaphragm	⑩	Brake pad
②	Master cylinder	⑪	Pad spring
③	Piston/cup set	Ⓐ	Master cylinder bolt (upper)
④	Delay valve	Ⓑ	Master cylinder bolt (lower)
⑤	Brake caliper	Ⓒ	Brake hose union bolt
⑥	Caliper bracket	Ⓓ	Brake caliper mounting bolt
⑦	Piston seal	Ⓔ	Brake pad bolt
⑧	Dust seal	Ⓕ	Air bleeder valve
⑨	Piston		

ITEM	N·m	kgf-m
Ⓐ	12	1.2
Ⓑ	10	1.0
Ⓒ	23	2.3
Ⓓ	26	2.6
Ⓔ	18	1.8
Ⓕ	6	0.6

⚠ WARNING

* This brake system is filled with an ethylene glycol-based DOT 4 brake fluid. Do not use mix different types of fluid such as silicone-based or petroleum-based.
* Do not use any brake fluid taken from old, used or unsealed containers. Never reuse brake fluid left over from the last servicing or stored for long periods.
* When storing the brake fluid, seal the container completely and keep away from children.
* When replenishing brake fluid, take care not to get dust into fluid.
* When washing brake components, use fresh brake fluid. Never use cleaning solvent.
* A contaminated brake disc or brake pad reduces braking performance. Discard contaminated pads and clean the disc with high quality brake cleaner or neutral detergent.

CAUTION

Handle brake fluid with care: The fluid reacts chemically with paint, plastics, rubber materials etc. and will damage then severely.

BRAKE FLUID REPLACEMENT

(☞2-16)

BRAKE PAD REPLACEMENT

(☞2-15)

FRONT BRAKE CALIPER REMOVAL AND DISASSEMBLY

- Remove the brake hose union bolts ① and catch the brake fluid in a suitable receptacle.
- Remove the brake caliper ②.

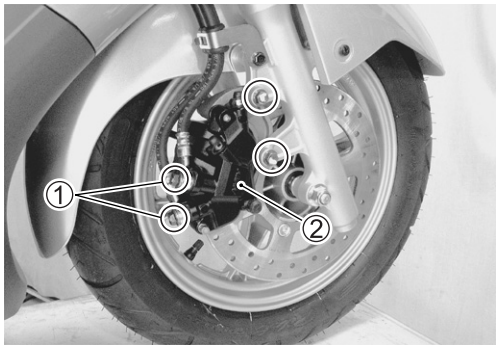

CAUTION

To prevent brake fluid from splashing on the parts nearby, cover the parts with cloth.

- Remove the brake pad bolt ③.
- Remove the brake pads.

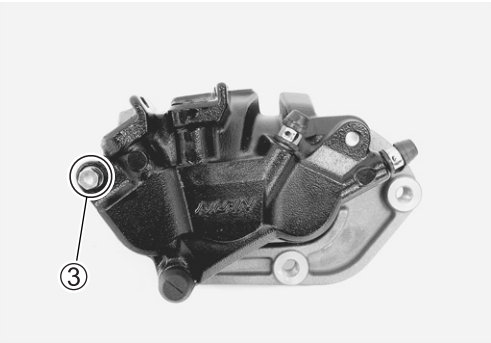

- Remove the brake pad springs ④ and ⑤.

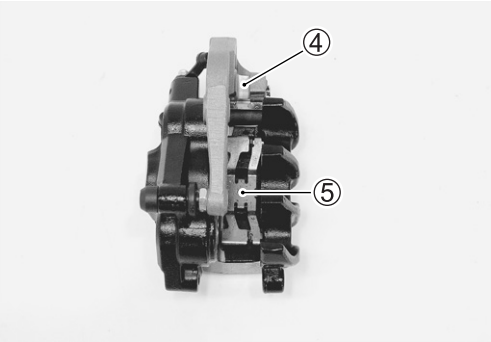

- Using an air blow gun, pressurize the caliper fluid chamber to push out the pistons.
- Blow the hole Ⓐ to push out the center piston.

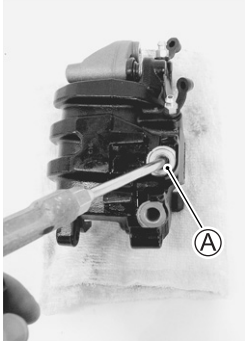

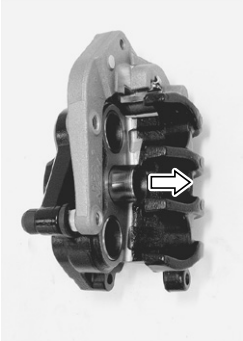

- Blow the hole Ⓑ to push out the upper and lower pistons.

⚠ WARNING

> *** Place a rag over the pistons to prevent them from popping out and keep hand off the pistons.**
> *** Be careful of brake fluid which can possibly splash.**
> *** Do not use high pressure air but increase the pressure gradually.**

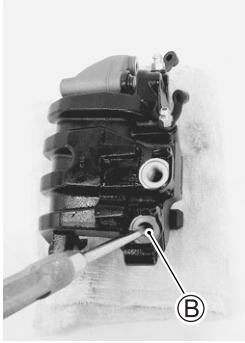

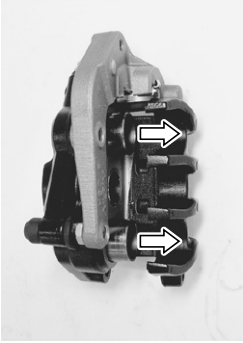

- Remove the dust seals ⑥ and piston seals ⑦.

CAUTION

> *** Use care not to cause scratch on the cylinder bore.**
> *** Do not reuse the piston seals and dust seals that have been removed.**

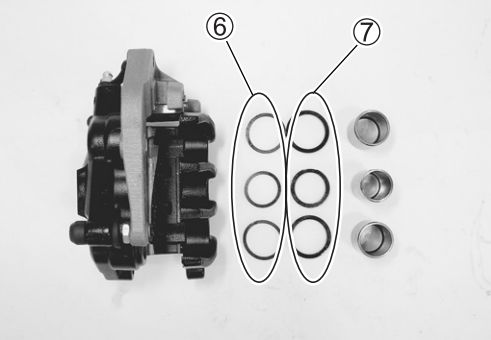

FRONT BRAKE CALIPER INSPECTION

Inspect the caliper cylinder wall and piston surface for scratch, corrosion or other damages.
If any abnormal condition is noted, replace it with a new one.

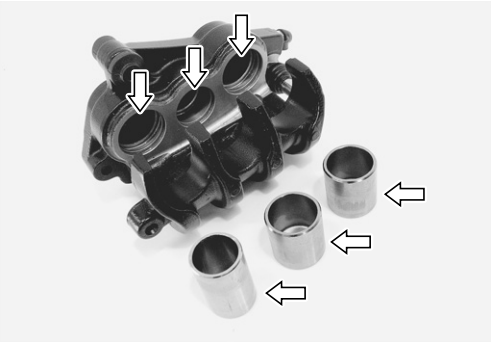

Inspect the caliper bracket ① for any damage.
Inspect the rubber boots ② for any damage.
If any abnormal condition is noted, replace it with a new one.

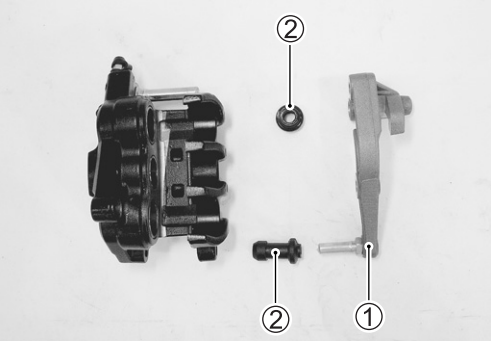

FRONT BRAKE CALIPER REASSEMBLY

Reassemble the caliper in the reverse order of disassembly.
Pay attention to the following points:

CAUTION

- **Wash the caliper components with fresh brake fluid before reassembly. Do not wipe off brake fluid after washing the components.**
- **Replace the piston seals and dust seals with new ones with brake fluid applied.**

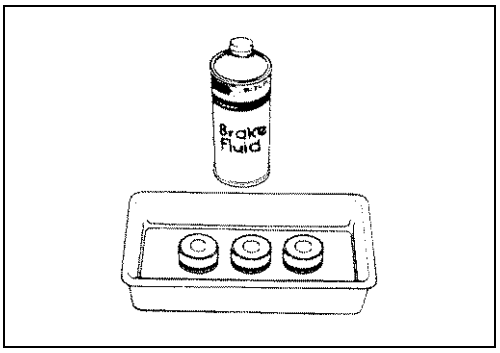

Specification and classification: DOT 4

- Install the piston seals and dust seals as shown in the right illustration.
- Install the pistons.

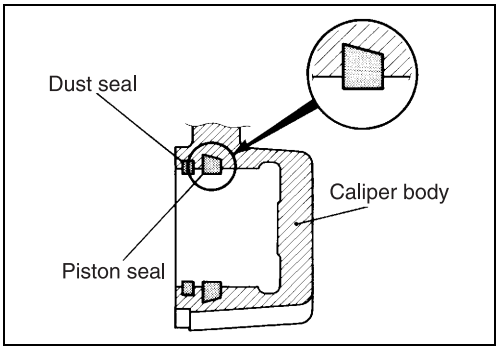

- Apply SUZUKI SILICONE GREASE to the caliper bracket pin ① and boots ②.

99000-25100: SUZUKI SILICONE GREASE or equivalent

- Install the caliper bracket.

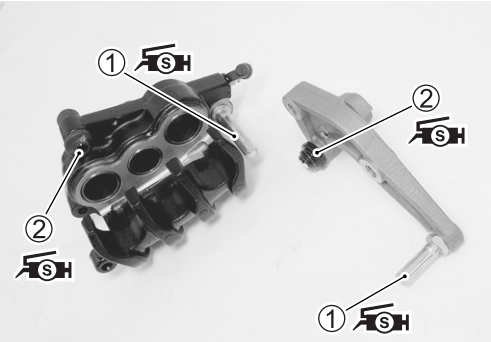

- Install the brake pad springs ③ and ④ properly.

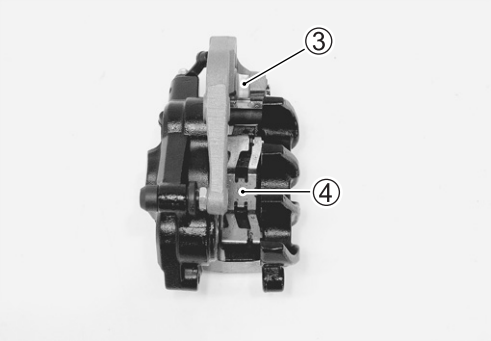

- Install the brake pads.
- Install the brake pad bolt ⑤.

Brake pad bolt: 18 N·m (1.8 kgf-m)

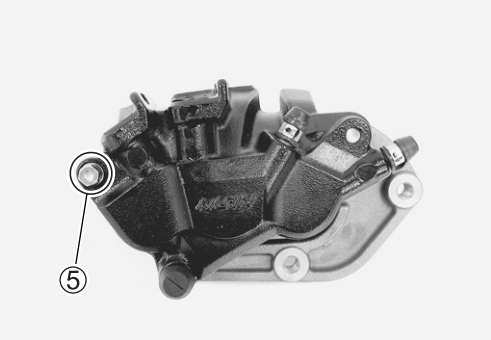

- Tighten the brake caliper mounting bolts ⑥.
- With the hose end contacted to the stopper, tighten the brake hose union bolt ⑦.

Brake caliper mounting bolt: 26 N·m (2.6 kgf-m)
Brake hose union bolt: 23 N·m (2.3 kgf-m)

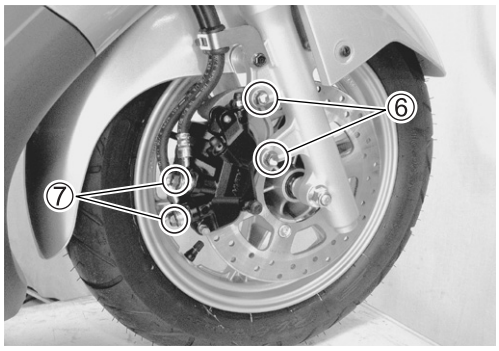

CAUTION

- **The seal washers should be replaced with the new ones to prevent fluid leakage.**
- **Bleed air from the brake system after reassembling the caliper. (☞2-17)**

BRAKE DISC INSPECTION

Check the brake disc surface for scratch, crack or abnormal wear.
Measure the disc thickness at several positions using a micrometer.
If the measurement is less than the service limit or any abnormal condition is noted, replace the disc with a new one.
(For replacement procedure: ☞8-16)

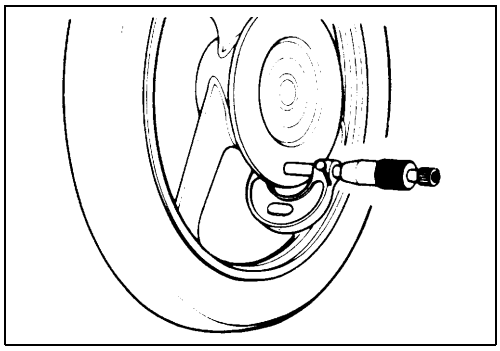

DATA Brake disc thickness
Service Limit: 4.0 mm

TOOL 09900-20205: Micrometer (0 – 25 mm)

Measure the runout with a dial gauge.
Replace the disc if the runout exceeds the service limit.
(For replacement procedure: ☞8-16)

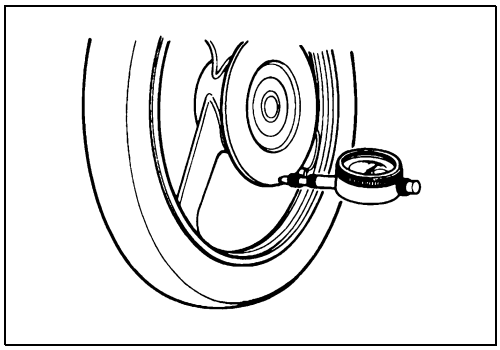

DATA Brake disc runout
Service Limit: 0.3 mm

TOOL 09900-20607: Dial gauge (1/100 mm)
09900-20701: Magnetic stand

FRONT BRAKE MASTER CYLINDER REMOVAL AND DISASSEMBLY

- Remove the handlebar covers. (☞8-4)
- Drain brake fluid. (☞2-16)
- Disconnect the brake light switch lead wires ①.
- Remove the brake hose union bolt ②.

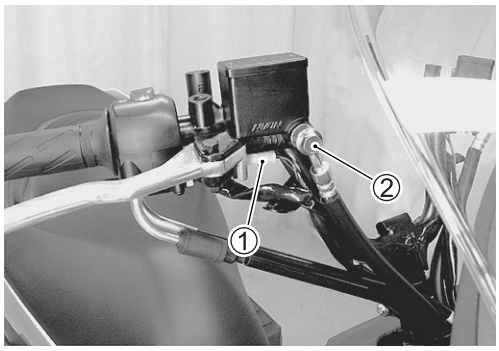

CAUTION

Place a rag under the brake hose union bolt so that brake fluid may not contact the parts.

- Remove the master cylinder.

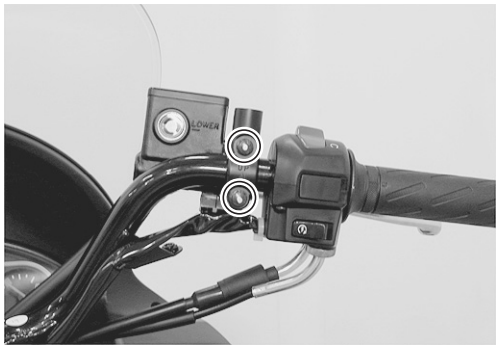

- Remove the brake light switch ③ and brake lever ④.

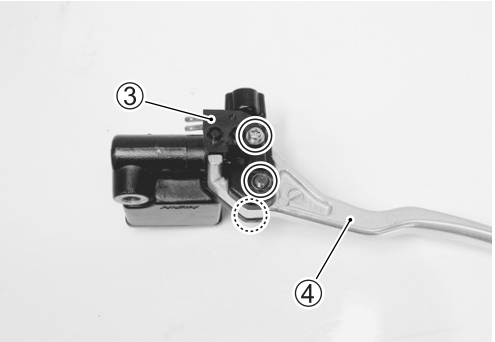

- Remove the dust boot ⑤.
- Remove the snap ring ⑥.

- Remove the washer ⑦ and piston/cup set ⑧.

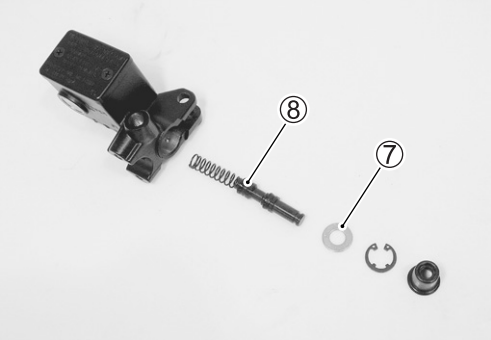

FRONT BRAKE MASTER CYLINDER INSPECTION

Check the cylinder inside wall, piston/cup set and spring for scratch, corrosion or other abnormal condition.
If any abnormal condition is found, replace the inner parts or master cylinder.

FRONT BRAKE MASTER CYLINDER REASSEMBLY AND INSTALLATION

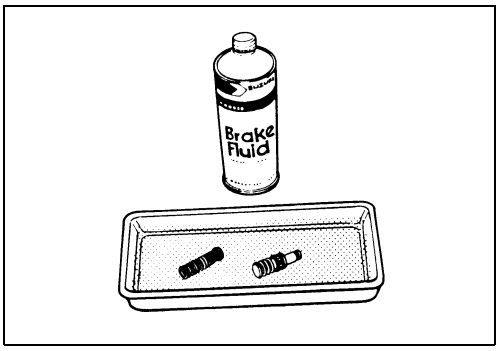

Reassemble and install the master cylinder in the reverse order of removal and disassembly. Pay attention to the following points:

CAUTION

- **Wash the master cylinder components with fresh brake fluid before reassembly.**
- **Do not wipe the brake fluid off after washing the components.**
- **When washing the components, use the specified brake fluid. Never use different types of fluid or cleaning solvents such as gasoline, kerosine, etc.**
- **Apply brake fluid to the master cylinder bore and all of the master cylinder components before reassembly.**

Specification and classification: DOT 4

- When installing the brake light switch, align the projection on the switch with the hole in the master cylinder.

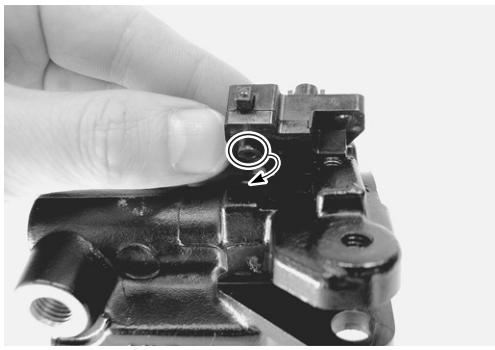

- Apply SUZUKI SILICONE GREASE to the brake lever pivot bolt.

99000-25100: SUZUKI SILICONE GREASE or equivalent

- Tighten the brake lever pivot bolt and nut to the specified torque.

Brake lever pivot bolt: 6 N·m (0.6 kgf-m)
Brake lever pivot nut: 6 N·m (0.6 kgf-m)

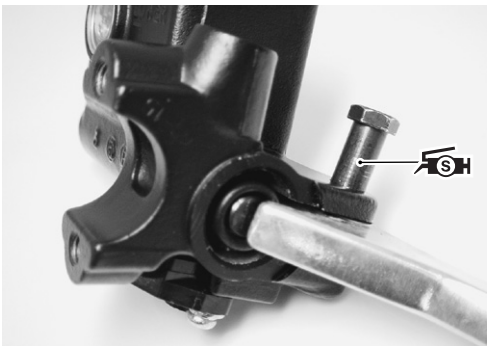

- When installing the master cylinder onto the handlebars, align the master cylinder holder's mating surface Ⓐ with the punch mark Ⓑ on the handlebars and tighten the upper holder bolt first.

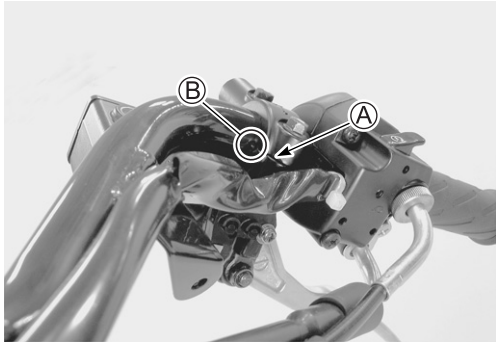

Ⓐ Mating surface
Ⓑ Punch mark
Ⓒ Master cylinder
Ⓓ Handlebars
Ⓔ Upper holder bolt
Ⓕ Clearance

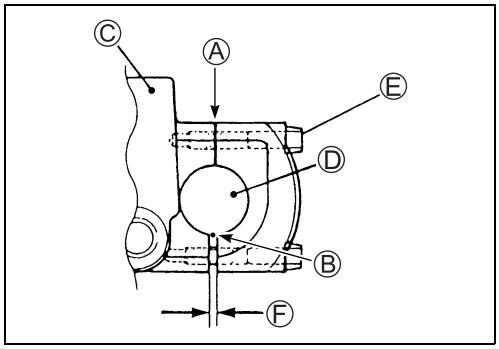

Master cylinder holder bolt:
Upper: 12 N·m (1.2 kgf-m)
Lower: 10 N·m (1.0 kgf-m)

- After contacting the brake hose union to the stopper, tighten the union bolt ① to the specified torque.

Brake hose union bolt: 23 N·m (2.3 kgf-m)

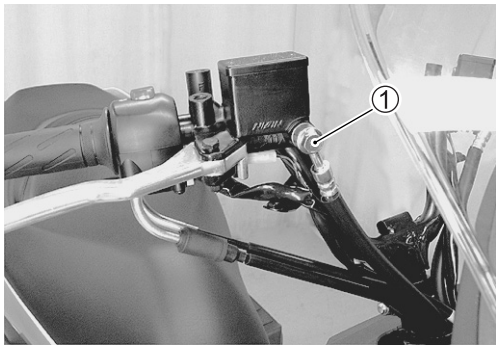

CAUTION

*** The seal washers should be replaced with the new ones to prevent fluid leakage.**
*** Bleed air from the brake system after reassembling the master cylinder. (☞2-17)**

REAR BRAKE
CONSTRUCTION

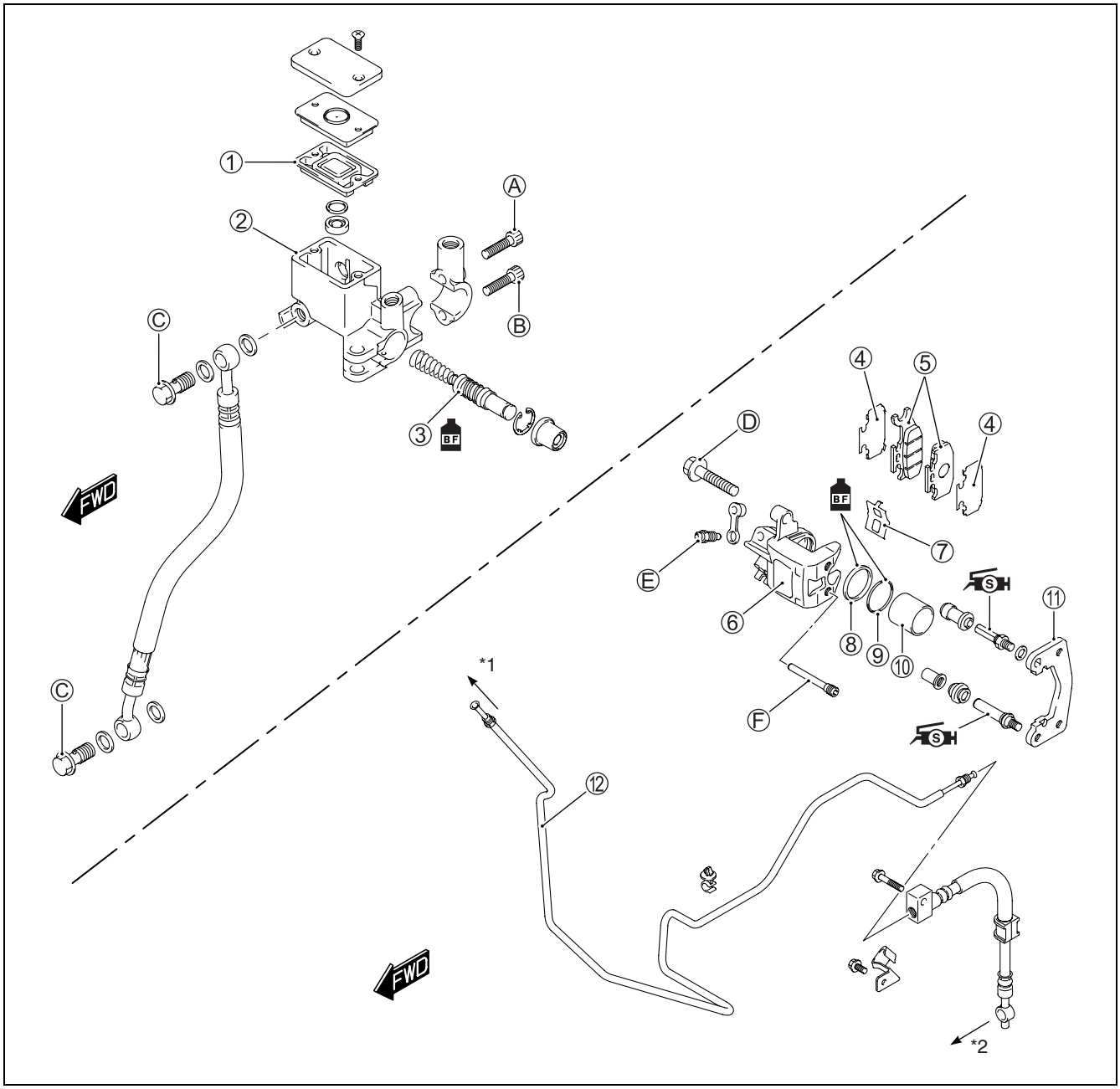

①	Diaphragm	⑪	Caliper bracket
②	Master cylinder	⑫	Rear brake pipe
③	Piston/cup set	*1	To the delay valve
④	Brake pad shim	*2	To the rear brake caliper
⑤	Brake pads	Ⓐ	Master cylinder bolt (upper)
⑥	Brake caliper	Ⓑ	Master cylinder bolt (lower)
⑦	Pad spring	Ⓒ	Brake hose union bolt
⑧	Piston seal	Ⓓ	Brake caliper mounting bolt
⑨	Dust seal	Ⓔ	Air bleeder valve
⑩	Piston	Ⓕ	Brake pad bolt

ITEM	N·m	kgf-m
Ⓐ	12	1.2
Ⓑ	10	1.0
Ⓒ	23	2.3
Ⓓ	26	2.6
Ⓔ	6	0.6
Ⓕ	18	1.8

⚠ WARNING

* **This brake system is filled with an ethylene glycol-based DOT 4 brake fluid. Do not use mix different types of fluid such as silicone-based or petroleum-based.**
* **Do not use any brake fluid taken from old, used or unsealed containers. Never reuse brake fluid left over from the last servicing or stored for long periods.**
* **When storing the brake fluid, seal the container completely and keep away from children.**
* **When replenishing brake fluid, take care not to get dust into fluid.**
* **When washing brake components, use fresh brake fluid. Never use cleaning solvent.**
* **A contaminated brake disc or brake pad reduces braking performance. Discard contaminated pads and clean the disc with high quality brake cleaner or neutral detergent.**

CAUTION

Handle brake fluid with care: The fluid reacts chemically with paint, plastics, rubber materials etc. and will damage then severely.

REAR BRAKE CALIPER REMOVAL AND DISASSEMBLY

- Remove the muffler. (☞6-2)
- Remove the brake hose union bolt ①.
- Remove the brake caliper ②.

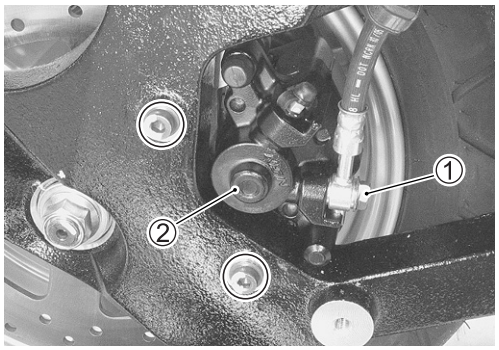

- Remove the brake pad bolt ③.
- Remove the caliper bracket ④ and brake pads.

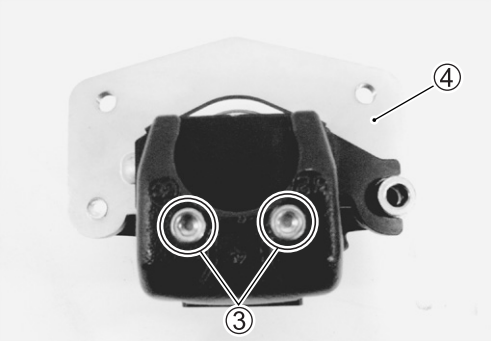

- Remove the pad spring ⑤.

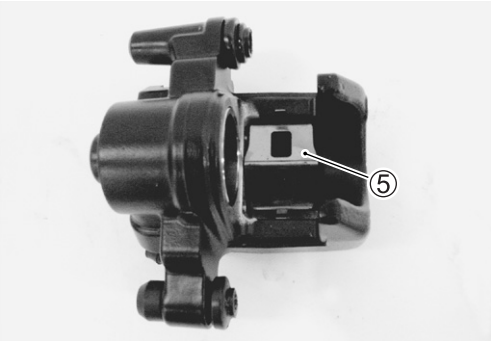

- Using an air blow gun, pressurize the caliper fluid chamber to push out the piston.

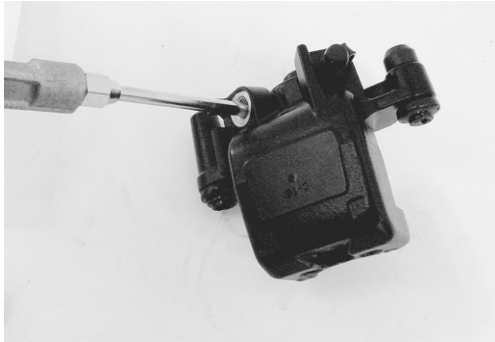

CAUTION

*** Place a rag over the piston to prevent it from popping out and flying and keep hand off the piston.**
*** Be careful of brake fluid which can possibly splash.**
*** Do not use high pressure air but increase the pressure gradually.**

- Remove the dust seal ⑥ and piston seal ⑦.

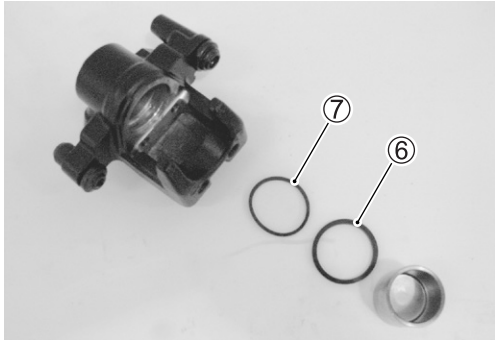

CAUTION

*** Use care not to cause scratch on the cylinder bore.**
*** Do not reuse the piston seal and dust seal that have been removed.**

REAR BRAKE CALIPER INSPECTION

Caliper (☞8-40)

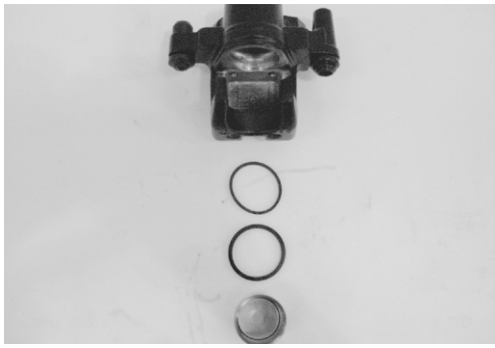

REAR BRAKE CALIPER REASSEMBLY

Reassemble the caliper in the reverse order of disassembly. Pay attention to the following points:

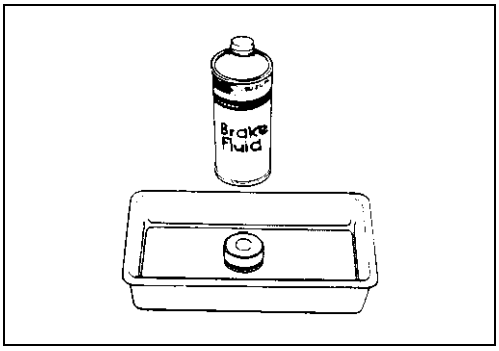

CAUTION

*** Wash the caliper components with fresh brake fluid before reassembly. Do not wipe off brake fluid after washing the components.**
*** Replace the piston seal and dust seal with new ones with brake fluid applied.**

Specification and classification: DOT 4

- Install the piston seal and dust seal as shown in the right illustration.
- Install the piston.

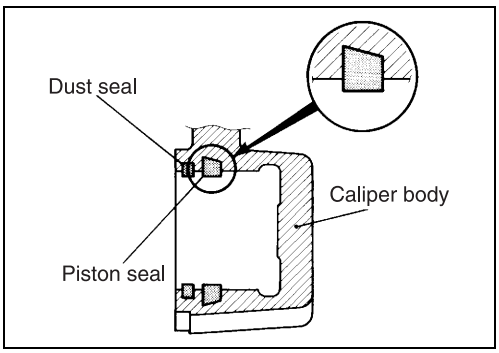

- Apply SUZUKI SILICONE GREASE to the caliper bracket pins.

99000-25100: SUZUKI SILICONE GREASE or equivalent

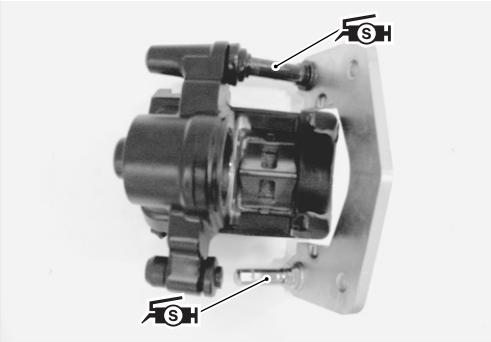

- Install the brake pads and brake pad bolts.

Brake pad bolt: 18 N·m (1.8 kgf-m)

- Tighten the brake caliper mounting bolts ①.

Brake caliper mounting bolt: 26 N·m (2.6 kgf-m)

- Tighten the brake hose union bolt ②.

Brake hose union bolt: 23 N·m (2.3kgf-m)

- Install the muffler. (☞6-3)

CAUTION

*** The seal washers should be replaced with the new ones to prevent fluid leakage.**
*** Bleed air from the brake system after reassembling the caliper. (☞2-17)**

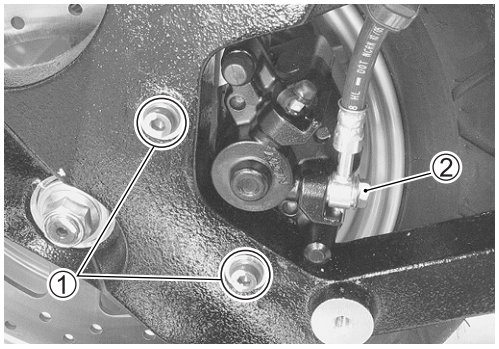

REAR BRAKE MASTER CYLINDER REMOVAL AND DISASSEMBLY

Remove and disassemble the rear brake master cylinder in the same manner as the front one. (☞8-42)

REAR BRAKE MASTER CYLINDER INSPECTION

Inspect the rear brake master cylinder in the same manner as the front one. (☞8-43)

REAR BRAKE MASTER CYLINDER REASSEMBLY AND INSTALLATION

Reassemble and install the rear brake master cylinder in the same manner as the front one. (☞8-44)

DELAY VALVE REMOVAL

- Drain brake fluid from the combination brake system. (☞2-16)
- Remove the front leg shield. (☞8-6)
- Remove the lower meter panel.
- Remove the brake pipe joint bolt ①.

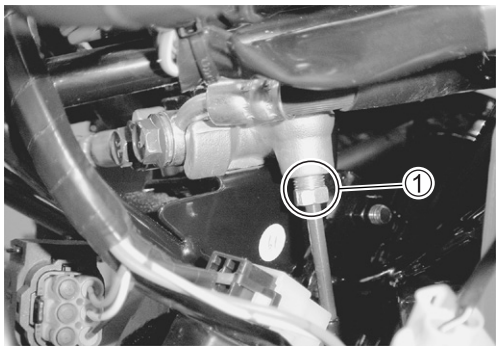

- Remove the union bolts ②.
- Remove the delay valve mounting bolts ③.

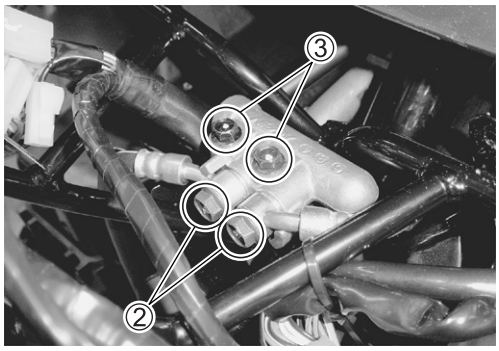

DELAY VALVE INSTALLATION

Install the delay valve in the reverse order of removal.
Pay attention to the following points:

- Tighten the delay valve mounting bolt ① securely.
- With the brake hose end contacted to the stopper, tighten the brake hose union bolt ② to the specified torque.

Brake hose union bolt: 23 N·m (2.3 kgf-m)

- Tighten the brake pipe joint bolt ③ to the specified torque.

Brake pipe joint bolt: 16 N·m (1.6 kgf-m)

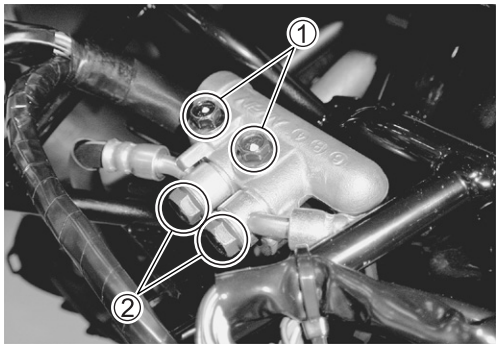

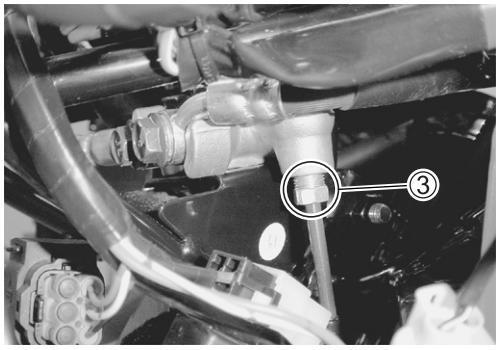

REAR SUSPENSION
CONSTRUCTION

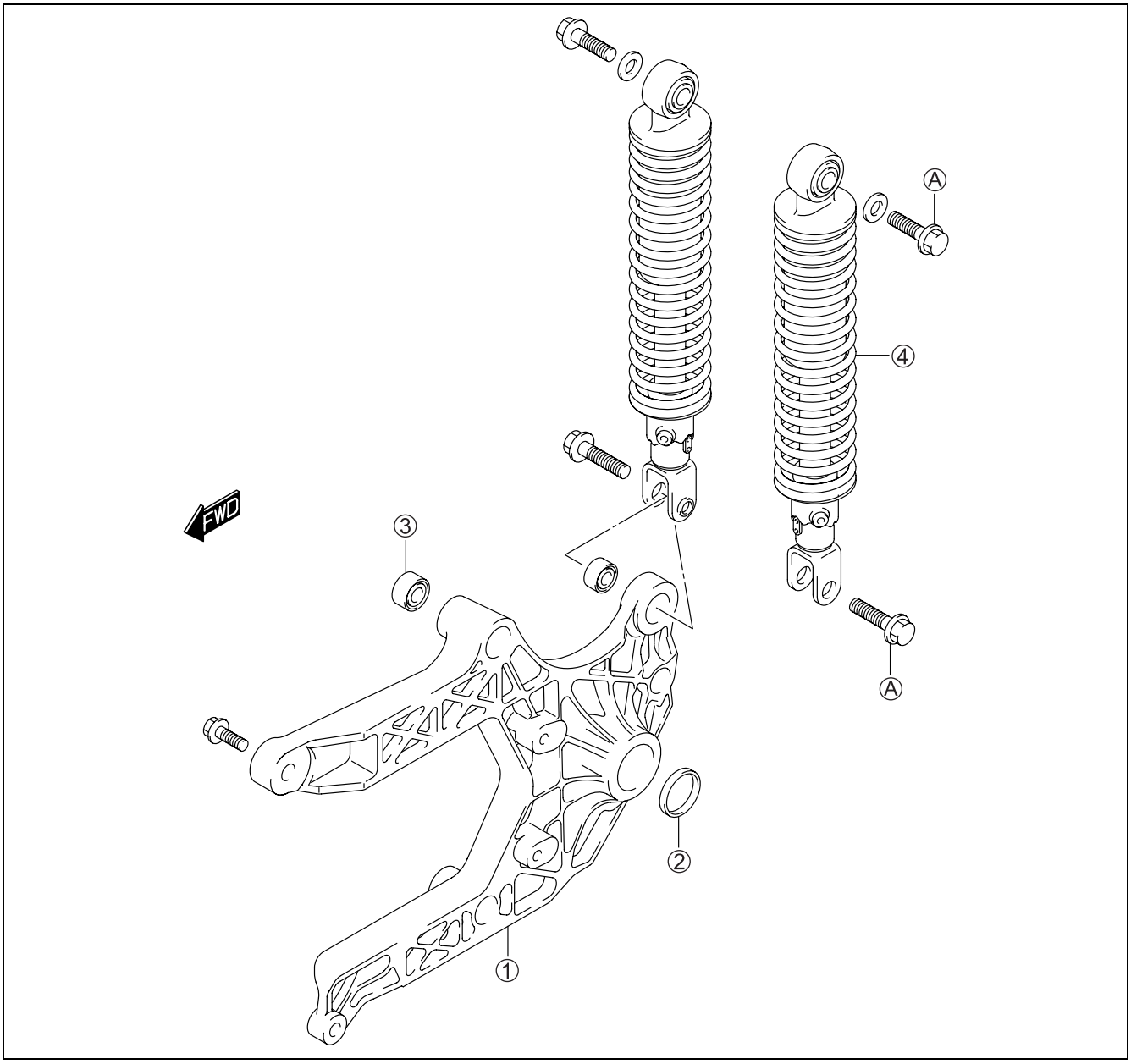

①	Rear swingarm	Ⓐ	Rear shock absorber mounting bolt (Upper and lower)
②	Dust seal		
③	Bearing		
④	Rear shock absorber		

ITEM	N·m	kgf-m
Ⓐ	29	2.9

REAR SWINGARM BEARING INSPECTION

- Inspect the play of the bearing by finger while it is in the swingarm. Rotate the inner race by finger to inspect for abnormal noise and smooth rotation.

NOTE:
If abnormal noise does not occur, it is not necessary to remove the bearing.

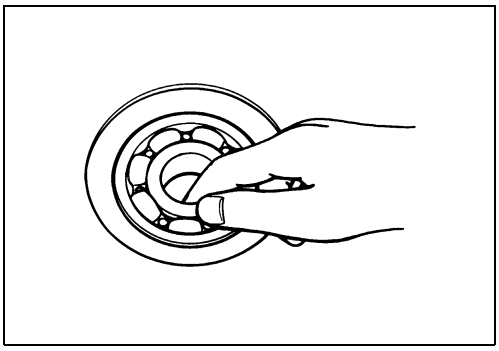

REAR SWINGARM BEARING REMOVAL

- Remove the rear swingarm. (☞8-36)
- Remove the dust seal ①.

TOOL 09913-50121: Oil seal remover

CAUTION

The removed dust seal should be replaced with a new one.

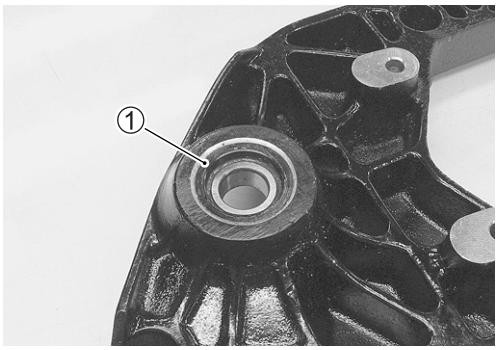

- Remove the bearing using the special tools.

TOOL 09923-73210: Bearing remover (17 mm)
09930-30104: Sliding shaft

CAUTION

The removed bearing should be replaced with new one.

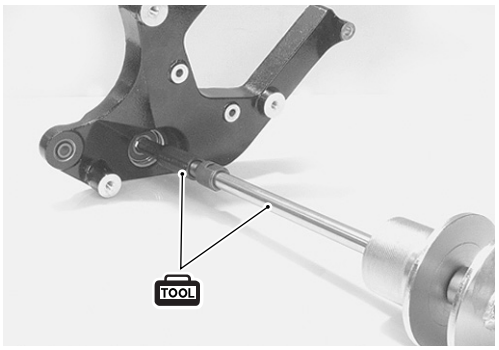

REAR SWINGARM BEARING INSTALLATION

- Install new bearing using the special tool.

TOOL 09913-70210: Bearing installer set (40 mm)

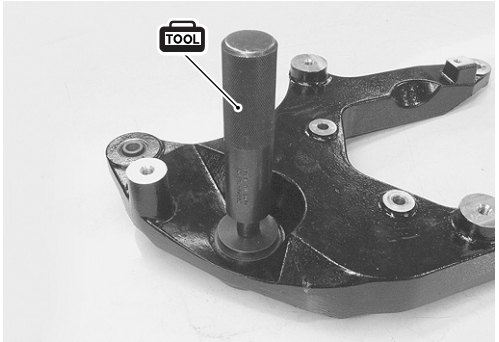

- Install new dust seal using the special tool.

TOOL 09913-70210: Bearing installer set (35 mm)

- Apply grease to the lip of dust seal.

A 99000-25010: SUZUKI SUPER GREASE "A" or equivalent

- Install the rear swingarm. (☞8-36)

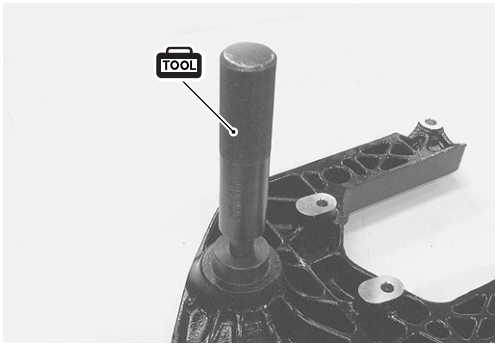

REAR SHOCK ABSORBER REMOVAL

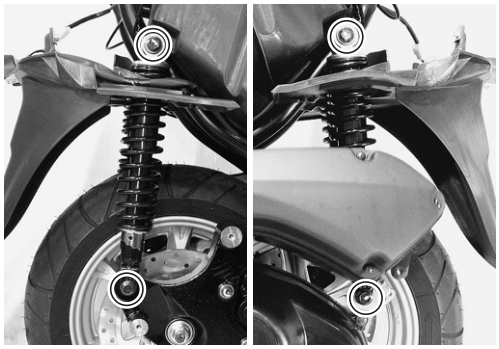

- Remove the frame covers. (☞8-9)
- Remove the muffler for right rear shock absorber removal. (☞6-2)
- Move the air cleaner box upward for left rear shock absorber removal. (☞2-10)
- Remove the rear shock absorber.

REAR SHOCK ABSORBER INSPECTION

- Inspect the rear shock absorber for damage and oil leakage. If any defects are found, replace the rear shock absorber with a new one.

CAUTION

Do not attempt to disassemble the rear shock absorber. It is unserviceable.

REAR SHOCK ABSORBER INSTALLATION

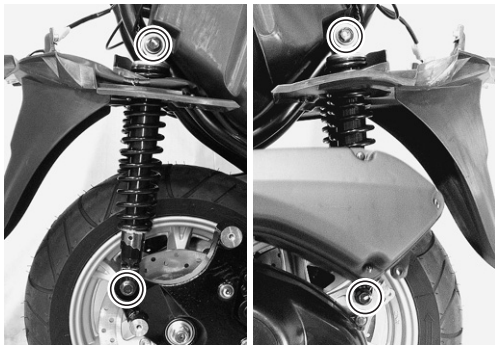

- Tighten the rear shock absorber mounting bolts to the specified torque.

Rear shock absorber mounting bolt (Upper & Lower)
: 29 N·m (2.9 kgf-m)

TIRE AND WHEEL

TIRE REMOVAL

The most critical factor of tubeless tire is the seal between the wheel rim and the tire bead. For this reason, it is recommended to use a tire changer that can satisfy this sealing requirement and can make the operation efficient as well as functional.
For operating procedures, refer to the instructions supplied by the tire changer manufacturer.

NOTE:
When removing the tire in the case of repair or inspection, mark the tire with a chalk to indicate the tire position relative to the valve position.
Even though the tire is refitted to the original position after repairing puncture, the tire may have to be balanced again since such a repair can cause imbalance.

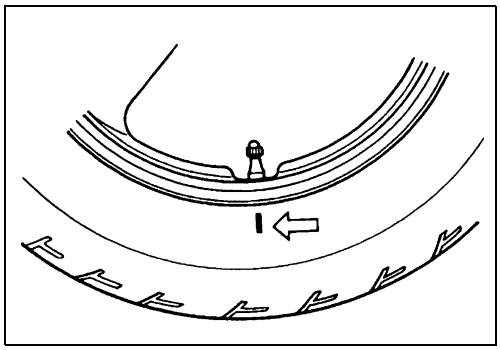

INSPECTION

WHEEL

Wipe the wheel clean and check for the following:
- Distortion and crack
- Any flaws and scratches at the bead seating area.
- Wheel rim runout (☞8-15)

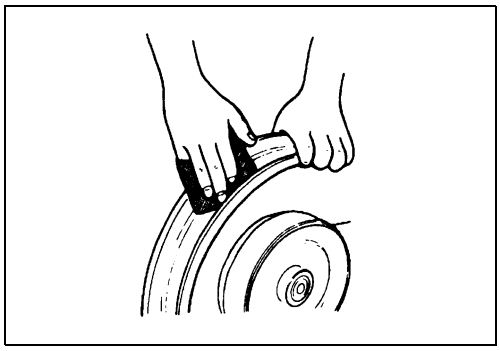

TIRE

Tire must be checked for the following points:
- Nick and rupture on side wall
- Tire tread depth (☞2-18)
- Tread separation
- Abnormal, uneven wear on tread
- Surface damage on bead
- Localized tread wear due to skidding (Flat spot)
- Abnormal condition of inner liner

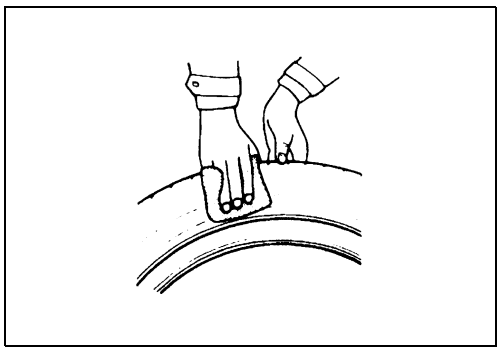

VALVE INSPECTION

- Inspect the valve after the tire is removed from the rim.
- Replace the valve with a new one if the seal rubber Ⓐ is peeling or has damage.

NOTE:
If the external appearance of the valve shows no abnormal condition, removing of the valve is not necessary.
If the seal has abnormal deformation, replace the valve with a new one.

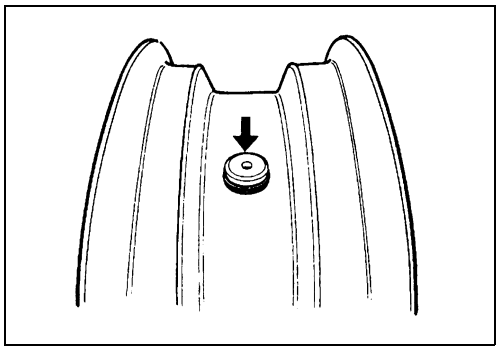

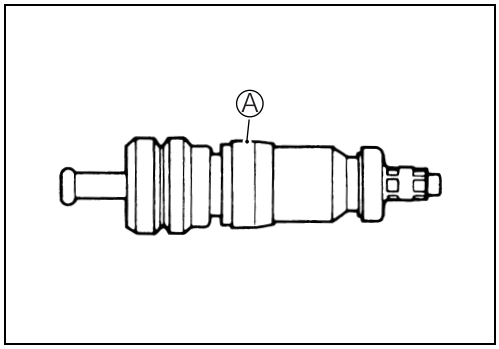

- Any dust or rust around the valve hole Ⓑ must be cleaned off.
- Then install the valve Ⓒ in the rim.

NOTE:
To properly install the valve into the valve hole, apply a special tire lubricant or neutral soapy liquid to the valve.

CAUTION

Be careful not to damage the lip Ⓒ of valve.

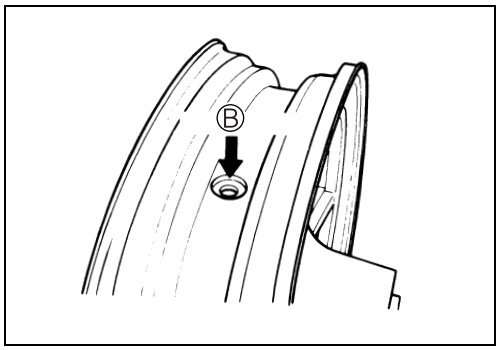

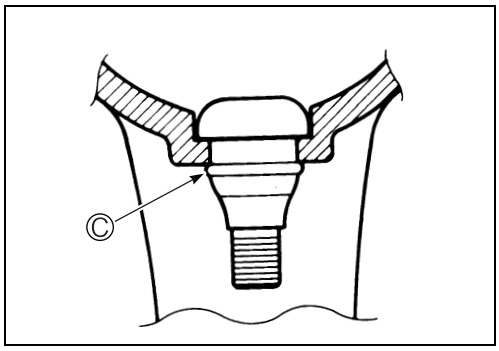

TIRE INSTALLATION

- Apply tire lubricant to the tire bead.
- When installing the tire onto the wheel, observe the following points.

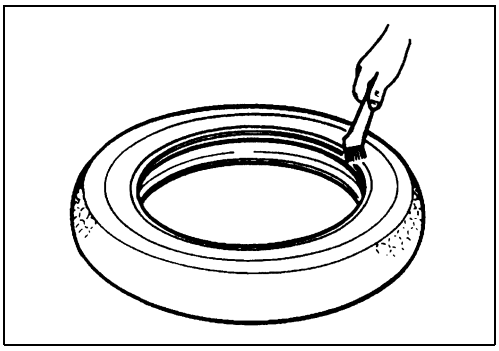

CAUTION

*** Do not reuse the valve which has been once removed.**
*** Never use oil, grease or gasoline on the tire bead in place of tire lubricant.**

- When installing the tire, the arrow Ⓐ on the side wall should point to the direction of wheel rotation.
- Align the chalk mark put on the tire at the time of removal with the valve position.

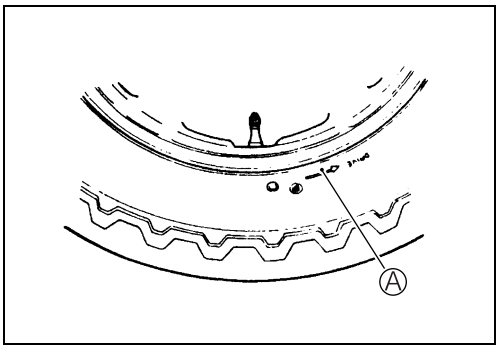

- For installation procedure of tire onto the wheel, follow the instructions given by the tire changer manufacturer.
- Bounce the tire several times while rotating. This makes the tire bead expand outward to contact the wheel, thereby facilitating air inflation.
- Inflate the tire.

⚠ WARNING

*** Do not inflate the tire to more than 400 kPa (4.0 kgf/cm²). If inflated beyond this limit, the tire can burst and possibly cause injury. Do not stand directly over the tire while inflating.**
*** In the case of preset pressure air inflator, pay special care for the set pressure adjustment.**

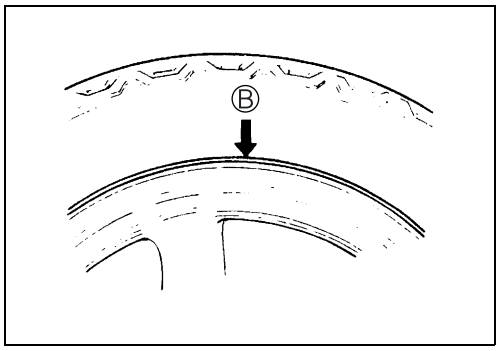

- In this condition, check the “rim line” Ⓑ cast on the tire side walls. The line must be equidistant from the wheel rim all around. If the distance between the rim line and wheel rim varies, this indicates that the bead is not properly seated. If this is the case, deflate the tire completely and unseat the bead for both sides. Coat the bead with lubricant and fit the tire again.
- When the bead has been fitted properly, adjust the pressure to specification.
- As necessary, adjust the tire balance.

CAUTION

Do not run with a repaired tire at a high speed.

DATA Cold inflation tire pressure

	Front	Rear
Solo riding	200 kPa (2.00 kgf/cm²)	225 kPa (2.25 kgf/cm²)
Dual riding	200 kPa (2.00 kgf/cm²)	280 kPa (2.80 kgf/cm²)

ELECTRICAL SYSTEM

CONTENTS

ELECTRICAL SYSTEM

CONTENTS

CAUTIONS IN SERVICING

CONNECTOR

- When connecting a connector, be sure to push it in until a click is felt.
- Inspect the connector for corrosion, contamination and breakage in its cover.

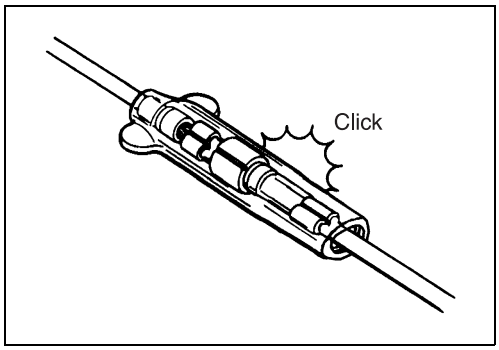

COUPLER

- With a lock type coupler, be sure to release the lock when disconnecting, and push in fully to engage the lock when connecting.
- When disconnecting the coupler, be sure to hold the coupler itself and do not pull the lead wires.
- Inspect each terminal on the coupler for being loose or bent.
- Inspect each terminal for corrosion and contamination.

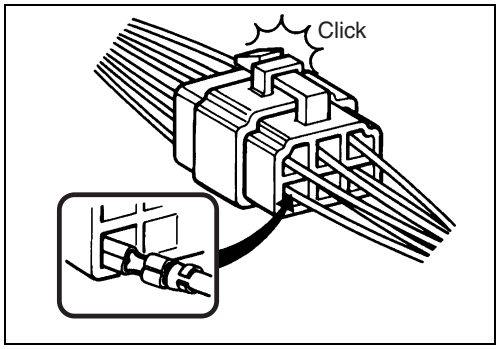

CLAMP

- Clamp the wire harness at such positions as indicated in "WIRING HARNESS ROUTING". (☞10-15 and -16)
- Bend the clamp properly so that the wire harness is clamped securely.
- In clamping the wire harness, use care not to allow it to hang down.
- Do not use wire or any other substitute for the band type clamp.

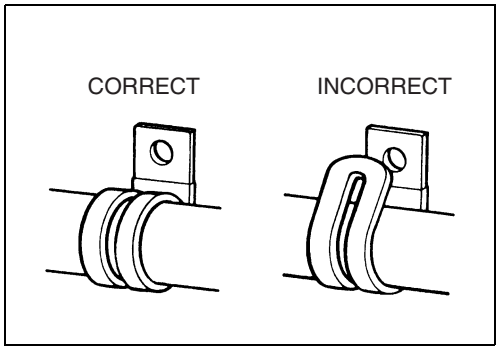

FUSE

- When a fuse blows, always investigate the cause to correct it and then replace the fuse.
- Do not use a fuse of a different capacity.
- Do not use wire or any other substitute for the fuse.

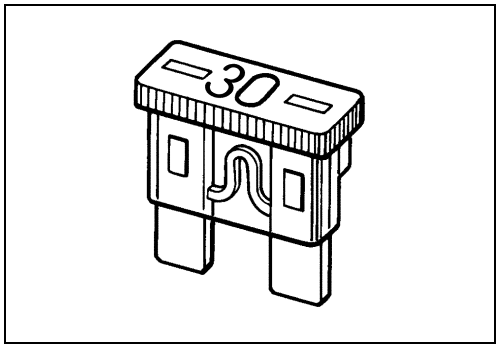

SWITCH

- Never apply grease material to switch contact points to prevent damage.

SEMI-CONDUCTOR EQUIPPED PART

- Be careful not to drop the part with a semi-conductor built in such as a ECM.
- When inspecting this part, follow inspection instruction strictly. Neglecting proper procedure may cause damage to this part.

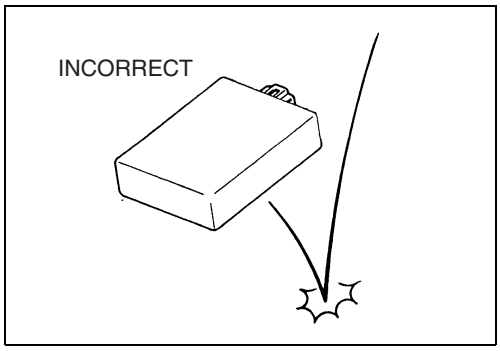

BATTERY

- The MF battery used in this motorcycle does not require maintenance (e.g., electrolyte level inspection, distilled water replenishment).
- During normal charging, no hydrogen gas is produced. However, if the battery is overcharged, hydrogen gas may be produced. Therefore, be sure there are no fire or spark sources (e.g., short circuit) nearby when charging the battery.
- Be sure to recharge the battery in a well-ventilated and open area.
- Note that the charging system for the MF battery is different from that of a conventional battery. Do not replace the MF battery with a conventional battery.

CONNECTING THE BATTERY

- When disconnecting terminals from the battery for disassembly or servicing, be sure to disconnect the ⊖ battery lead wire, first.
- When connecting the battery lead wires, be sure to connect the ⊕ battery lead wire, first.
- If the terminal is corroded, remove the battery, pour warm water over it and clean it with a wire brush.
- After connecting the battery, apply a light coat of grease to the battery terminals.
- Install the cover over the ⊕ battery terminal.

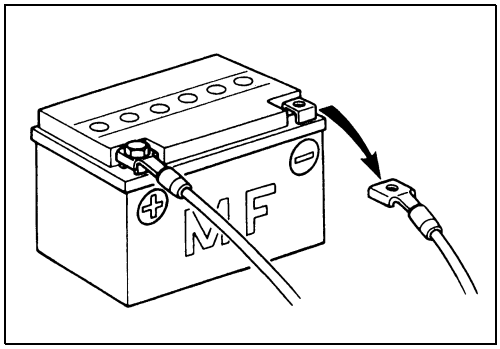

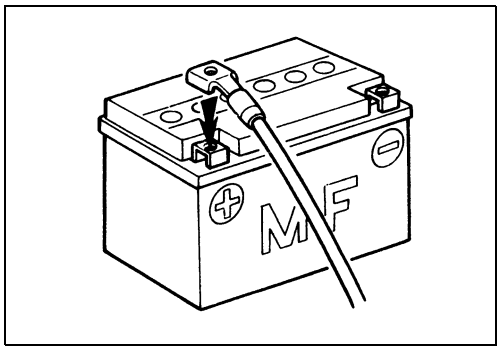

WIRING PROCEDURE

- Properly route the wire harness according to the “WIRING HARNESS ROUTING” section. (☞10-15 and -16)

USING THE MULTI-CIRCUIT TESTER

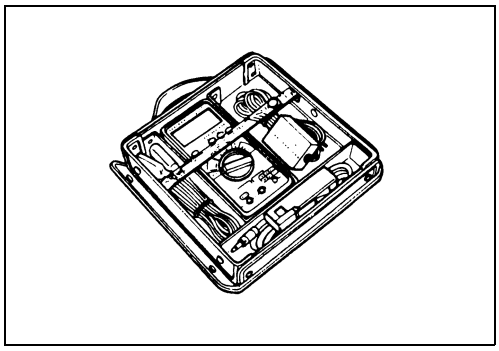

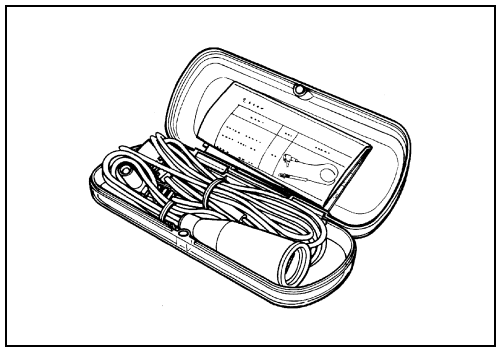

- Properly use the multi-circuit tester ⊕ and ⊖ probes. Improper use can cause damage to the motorcycle and tester.
- If the voltage and current values are not known, begin measuring in the highest range.
- When measuring the resistance, make sure that no voltage is applied. If voltage is applied, the tester will be damaged.
- After using the tester, be sure to turn the switch to the OFF position.

TOOL 09900-25008: Multi-circuit tester set

CAUTION

Before using the multi-circuit tester, read its instruction manual.

NOTE:

** When connecting the multi-circuit tester, use the needle pointed probe to the back side of the lead wire coupler and connect the probes of tester to them.*

** Use the needle pointed probe to prevent the rubber of the water proof coupler from damage.*

TOOL 09900-25009: Needle pointed probe set

LOCATION OF ELECTRICAL COMPONENTS

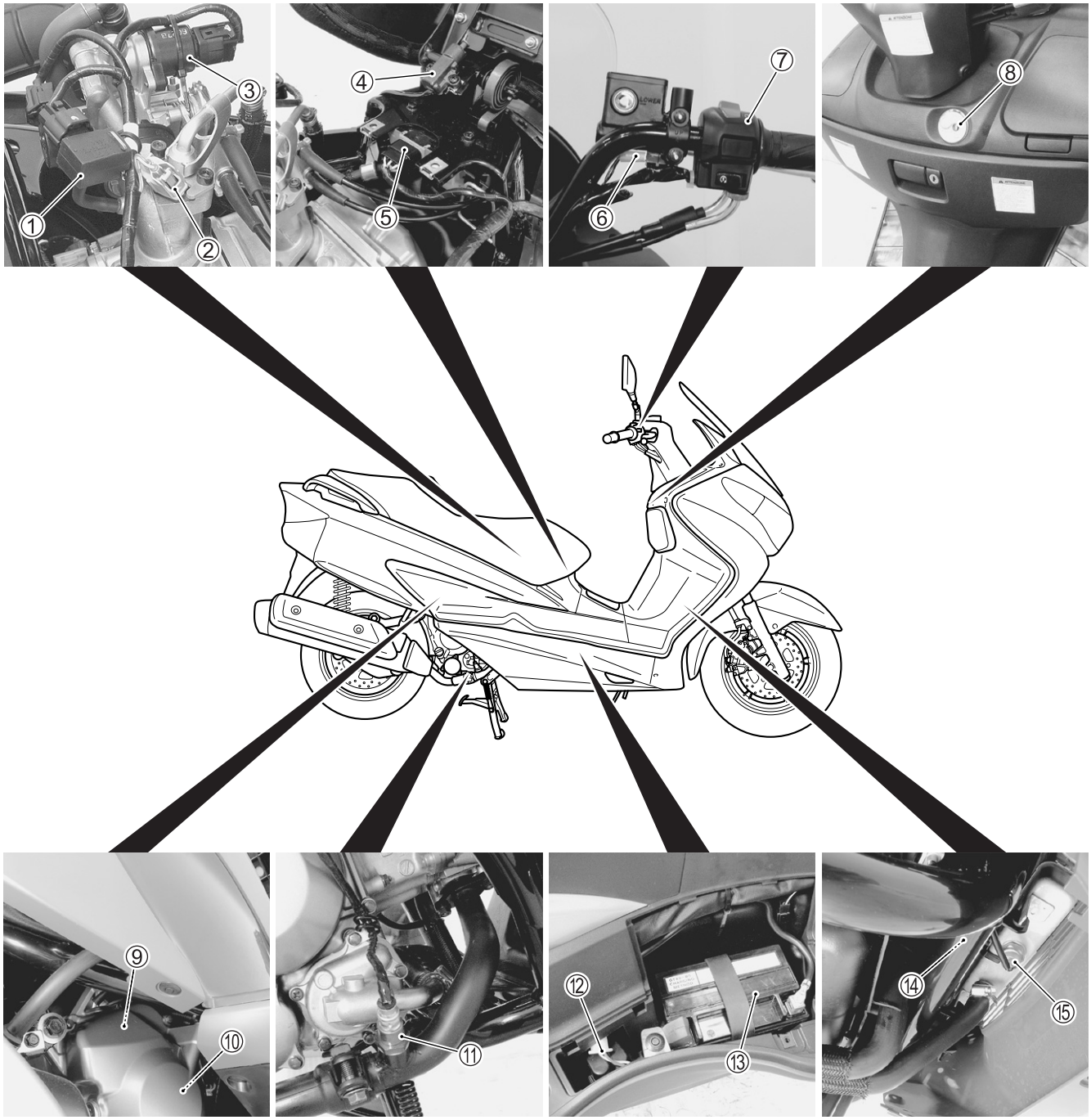

① IAP sensor
② Fuel injector
③ ISC valve
④ Trunk light switch
⑤ Regulator/Rectifier
⑥ Front brake switch
⑦ Handlebar switch (RH)
⑧ Ignition switch
⑨ CKP sensor
⑩ Generator
⑪ HO2 sensor
⑫ Starter relay
⑬ Battery
⑭ Cooling fan
⑮ Cooling fan thermo-switch

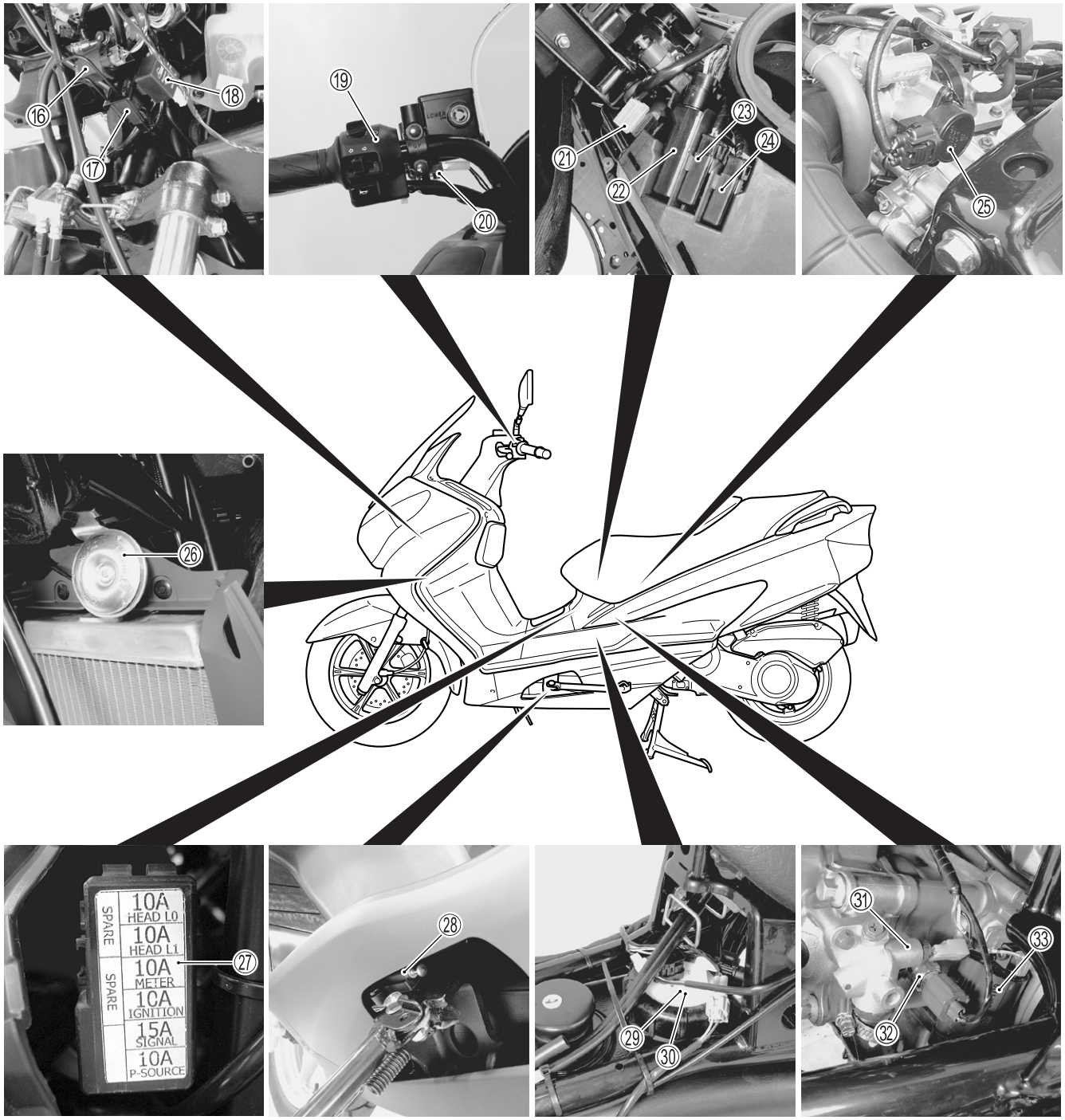

⑯ TO sensor
⑰ Side-stand relay
⑱ Turn signal relay
⑲ Handlebar switch (LH)
⑳ Combination brake switch
㉑ Main fuse
㉒ ECM
㉓ Brake start relay
㉔ Main relay
㉕ TP sensor
㉖ Horn
㉗ Fuse box
㉘ Side-stand switch
㉙ Fuel pump
㉚ Fuel level gauge
㉛ Engine coolant temperature gauge
㉜ ECT sensor
㉝ Ignition coil

CHARGING SYSTEM

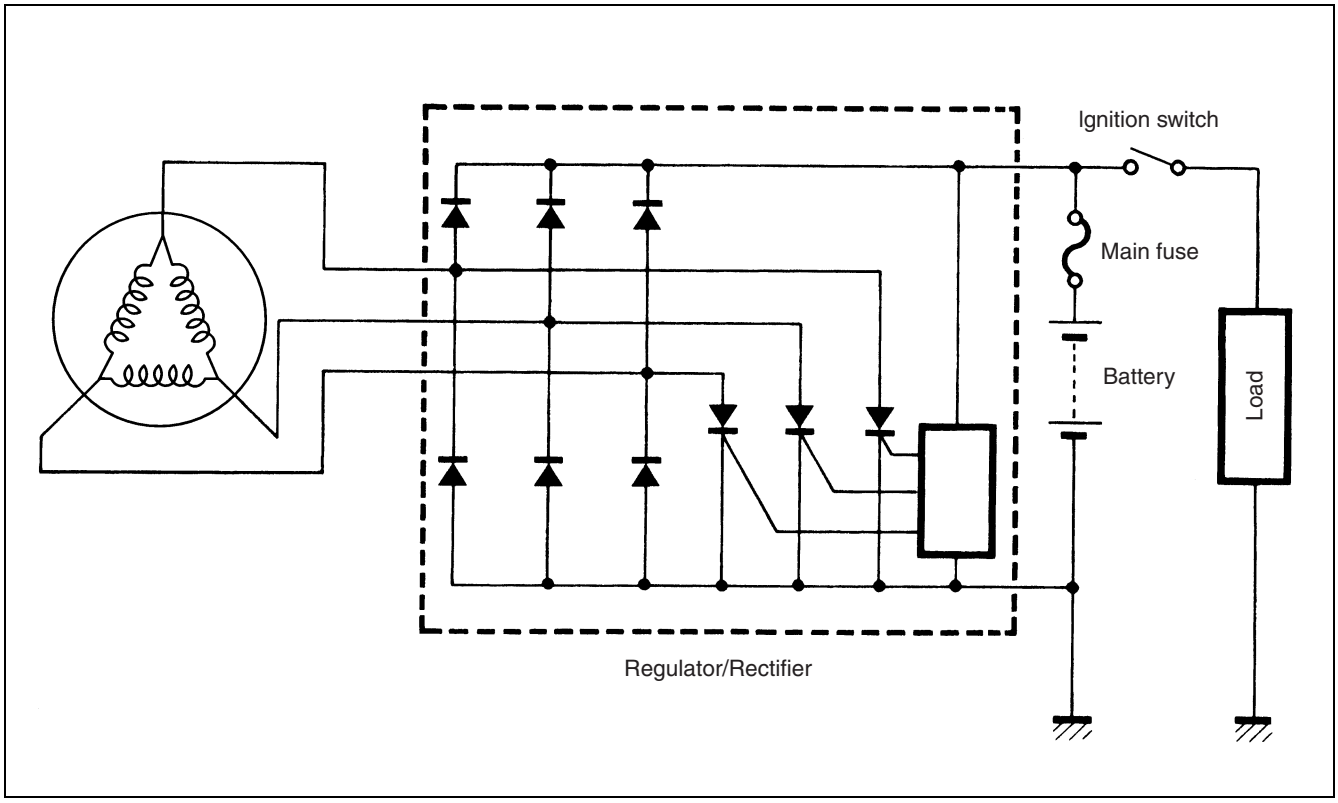

TROUBLESHOOTING

Battery runs down quickly

Step 1

1) Check accessories which use excessive amounts of electricity.
   Are accessories being installed?

YES	Remove accessories.
NO	Go to Step 2.

Step 2

1) Check the battery for current leaks. (☞9-10)
   Is the battery for current leaks OK?

YES	Go to Step 3.
NO	• Short circuit of wire harness • Faulty electrical equipment

Step 3

1) Measure the regulated voltage between the battery terminals. (☞9-10)
   Is the regulated voltage OK?

YES	• Faulty battery • Abnormal driving condition
NO	Go to Step 4.

Step 4

1) Measure the resistance of the generator coil. (☞9-11)
   Is the resistance of generator coil OK?

YES	Go to Step 5.
NO	• Faulty generator coil • Disconnected lead wires

Step 5

1) Measure the generator no-load performance. (☞9-11)
   Is the generator no-load performance OK?

YES	Go to Step 6.
NO	Faulty generator

Step 6

1) Inspect the regulator/rectifier. (☞9-12)
   Is the regulator/rectifier OK?

YES	Go to Step 7.
NO	Faulty regulator/rectifier

Step 7

1) Inspect wirings.
   Is the wirings OK?

YES	Faulty battery
NO	• Short circuit of wire harness • Poor contact of couplers

Battery overcharges

- Faulty regulator/rectifier
- Faulty battery
- Poor contact of generator lead wire coupler

INSPECTION

BATTERY CURRENT LEAKAGE

- Turn the ignition switch to the OFF position.
- Remove the battery cover. (☞8-8)
- Disconnect the battery ⊖ lead wire.
- Measure the current between battery ⊖ terminal and ⊖ lead wire using the multi-circuit tester. If the reading exceeds the specified value, leakage is evident.

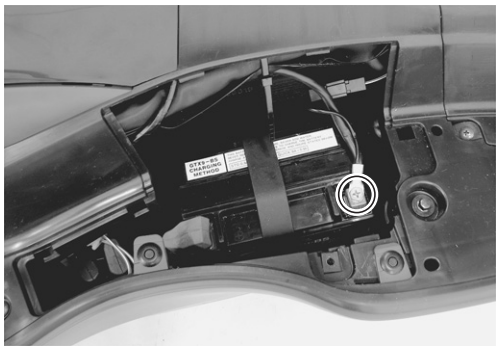

DATA Battery current (leak): Under 1 mA

TOOL 09900-25008: Multi-circuit tester set

Tester knob indication: Current (⎓, 20 mA)

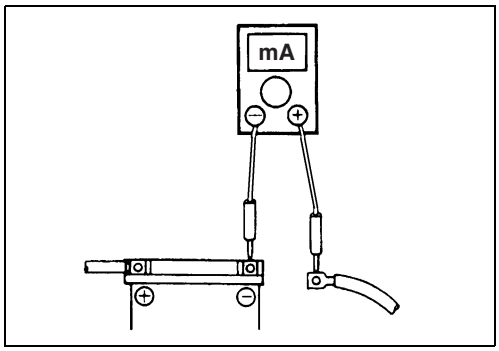

CAUTION

> *** In case of a large current leak, turn the tester to high range first to avoid tester damage.**
> *** Do not turn the ignition switch to the "ON" position when measuring current.**

REGULATED VOLTAGE

- Remove the battery cover. (☞8-8)
- Start the engine and keep it running at 5 000 r/min with the dimmer switch turned HI position.
- Measure the DC voltage between the battery ⊕ and ⊖ terminals using the multi-circuit tester. If the voltage is not within the specified value, inspect the generator and regulator/rectifier. (☞9-11 and -12)

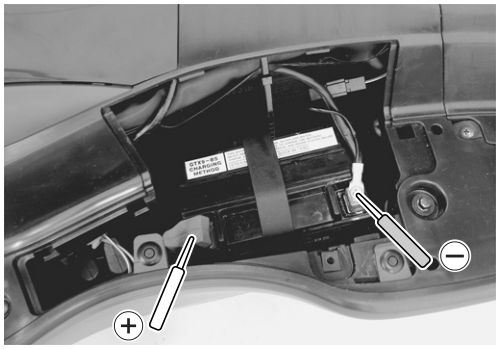

NOTE:
When making this test, be sure that the battery is in fully-charged condition.

DATA Regulated voltage (Charging output): 13.5 – 15.0 V at 5 000 r/min

TOOL 09900-25008: Multi-circuit tester set

Tester knob indication: Voltage (⎓)

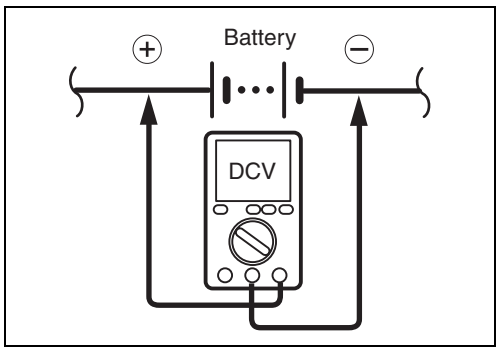

GENERATOR COIL RESISTANCE

- Remove the right side leg shield. (☞8-8)
- Disconnect the generator coupler ①.
- Measure the resistance between the three lead wires.
  If the resistance is out of specified value, replace the stator with a new one. Also, check that the generator core is insulated properly.

DATA Generator coil resistance: 0.2 – 0.8 Ω (Y – Y)
∞ Ω (Y – Ground)

TOOL 09900-25008: Multi-circuit tester set

Tester knob indication: Resistance (Ω)

NOTE:
When making above test, it is not necessary to remove the generator.

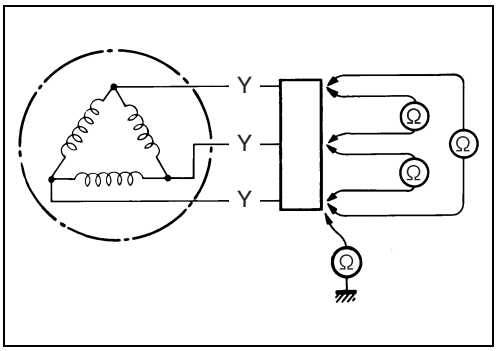

GENERATOR NO-LOAD PERFORMANCE

- Disconnect the generator coupler. (☞Above)
- Start the engine and keep it running at 5 000 r/min.
- Using the multi-circuit tester, measure the voltage between three lead wires.
  If the tester reads under the specified value, replace the generator with a new one.

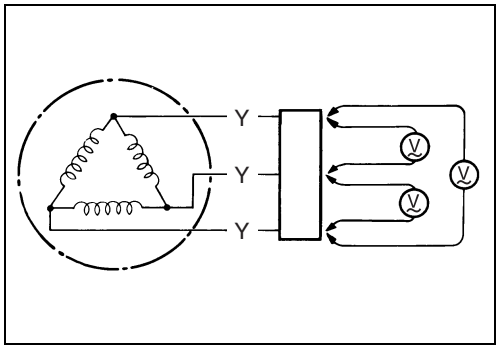

DATA Generator no-load performance:
60 V (AC) and more at 5 000 r/min
(When engine is cold)

TOOL 09900-25008: Multi-circuit tester set

Tester knob indication: Voltage (~)

REGULATOR/RECTIFIER

- Remove the trunk box. (☞8-11)
- Disconnect the regulator/rectifier coupler ①.
- Remove the regulator/rectifier.

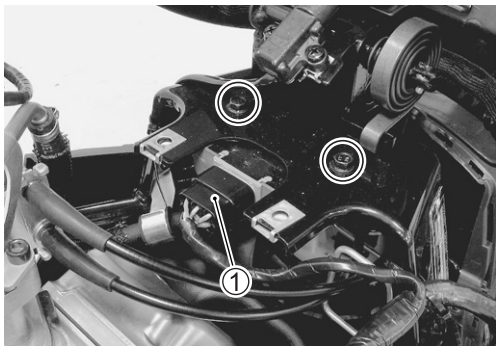

Measure the voltage between the terminals using the multi-circuit tester, as indicated in the table below.
If the voltage is not within the specified value, replace the regulator/rectifier with a new one.

09900-25008: Multi-circuit tester set

Tester knob indication: Diode test (⊣◀)

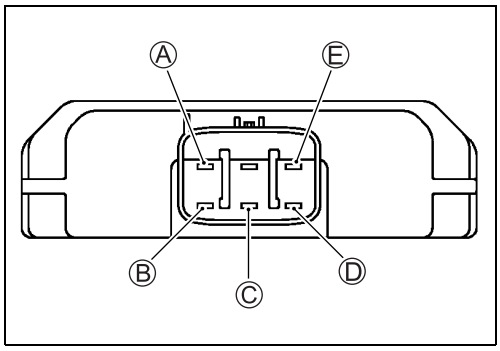

Unit: V

		⊖ Tester prove				
		Ⓐ	Ⓑ	Ⓒ	Ⓓ	Ⓔ
⊕ Tester prove	Ⓐ		0.2 – 0.8	0.2 – 0.8	0.2 – 0.8	0.4 – 1.0
	Ⓑ	✻		0.6 – 1.2	0.6 – 1.2	0.2 – 0.8
	Ⓒ	✻	0.6 – 1.2		0.6 – 1.2	0.2 – 0.8
	Ⓓ	✻	0.6 – 1.2	0.6 – 1.2		0.2 – 0.8
	Ⓔ	✻	0.3 – 1.0	0.3 – 1.0	0.3 – 1.0	

✻ 1.4 V and more (tester's battery voltage)

NOTE:
If the tester reads under 1.4 V when the tester probes are not connected, replace the battery of multi-circuit tester.

STARTER SYSTEM

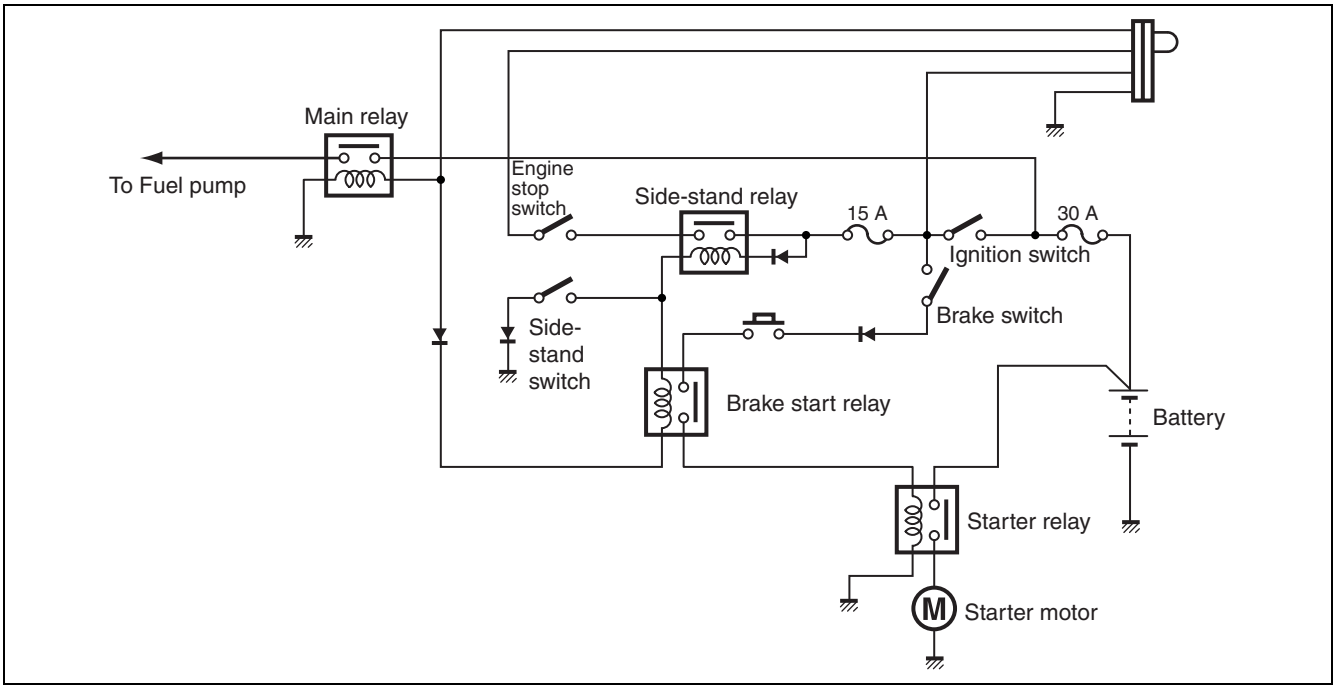

TROUBLE SHOOTING

NOTE:
Make sure the fuses are not blown and the battery is fully-charged before diagnosing.

Starter motor will not run.
Step 1
1) Grasp the front or rear brake lever, turn on the ignition switch with the engine stop switch in the “RUN” position and side-stand switch in the “ON” position.
2) Listen for a click from the starter relay when the starter button is pushed.
   Is a click sound heard?

YES	Go to Step 2.
NO	Go to Step 3.

Step 2
1) Check if the starter motor runs when its terminal is connected to the battery ⊕ terminal. (Do not use a thin wire because a large amount of current flows.)
   Does the starter motor run?

YES	• Faulty starter relay. • Loose or disconnected starter motor lead wire. • Loose or disconnected between starter relay and battery ⊕ terminal.
NO	Faulty starter motor.

Step 3

1) Measure the starter relay voltage at the starter relay connectors (between Bl/W ⊕ and R/W ⊖) when the starter button is pushed.
   Is a voltage OK?

YES	Go to Step 4.
NO	• Faulty safety relay. • Faulty starter button. • Faulty engine stop switch. • Faulty side-stand relay. • Faulty ignition switch. • Faulty front brake switch or rear brake switch. • Faulty side-stand switch. • Improper connector contact. • Open circuit in wire harness.

Step 4

1) Inspect the starter relay. (☞9-16)
   Is the starter relay OK?

YES	Poor starter relay connection.
NO	Faulty starter relay.

Engine does not turn though the starter motor runs.

- Faulty starter clutch.

STARTER MOTOR REMOVAL

- Remove the battery ⊖ lead wire from the battery.
- Remove the frame covers. (☞8-9)
- Remove the starter motor ①.

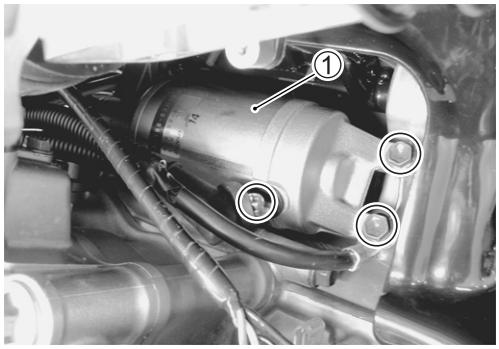

STARTER MOTOR DISASSEMBLY

- Disassemble the starter motor as shown in the illustration.

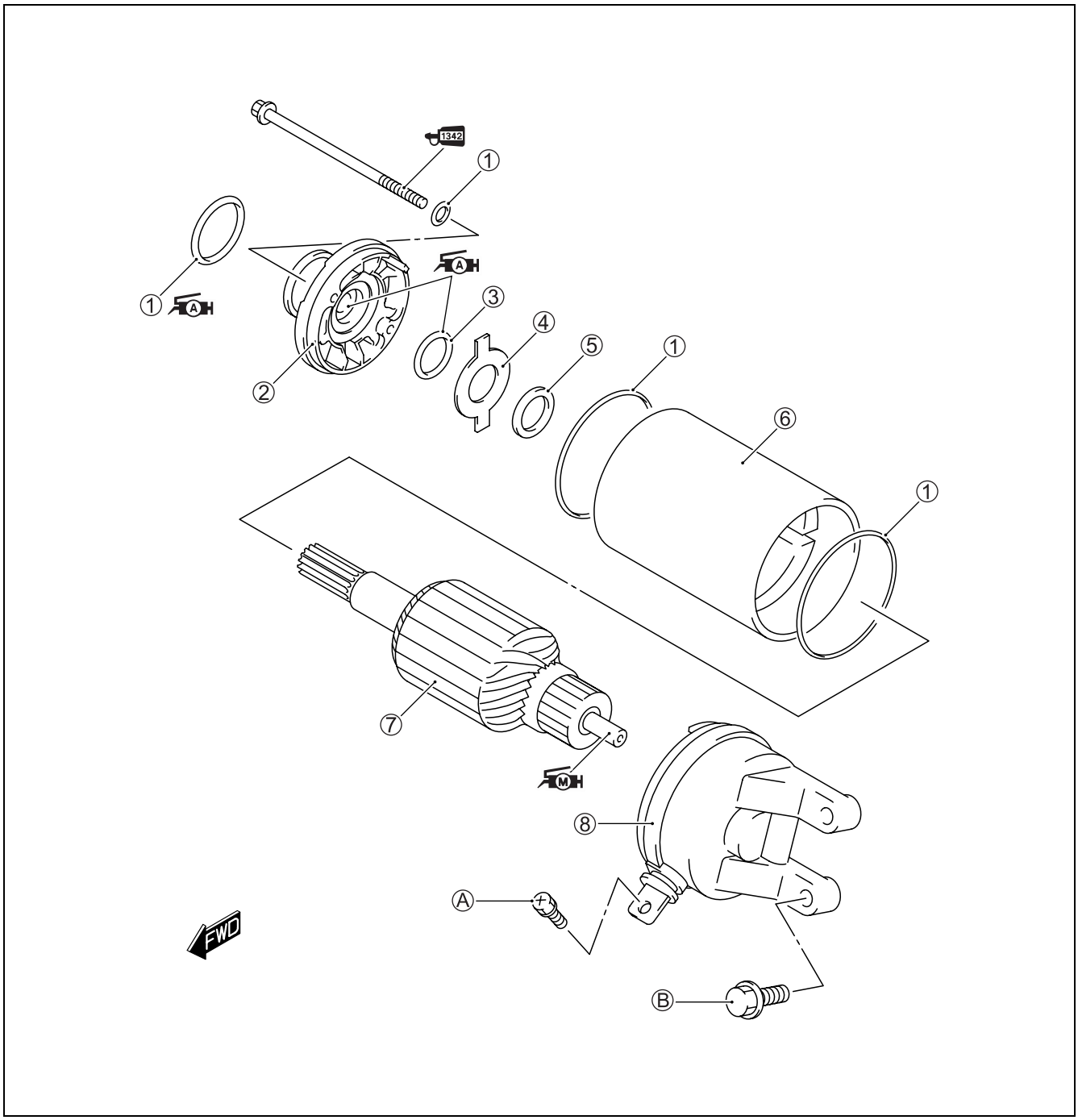

①	O-ring	⑥	Starter motor case
②	Housing end (inside)	⑦	Armature
③	Oil seal	⑧	Housing end (outside)
④	Washer	Ⓐ	Starter motor lead wire bolt
⑤	Shim	Ⓑ	Starter motor mounting bolt

ITEM	N·m	kgf-m
Ⓐ	3	0.3
Ⓑ	6	0.6

STARTER MOTOR INSPECTION

CARBON BRUSH

Inspect the brushes for abnormal wear, cracks, or smoothness in the brush holder.

If any damages are found, replace the brush assembly with a new one.

Make sure that the length Ⓐ is not less than 3.5 mm. If this length becomes less than 3.5 mm, replace the brush.

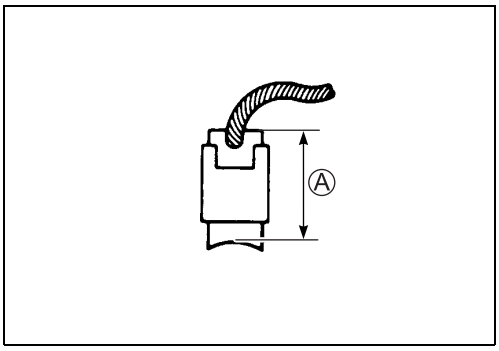

DATA Starter motor brush length
Service limit: 3.5 mm

COMMUTATOR

Inspect the commutator for discoloration, abnormal wear or undercut Ⓐ.

If abnormal wear is found, replace the armature with a new one.

If the commutator surface is discolored, polish it with #400 sand paper and wipe it using a clean dry cloth.

If there is no undercut, scrape out the insulator with a saw blade.

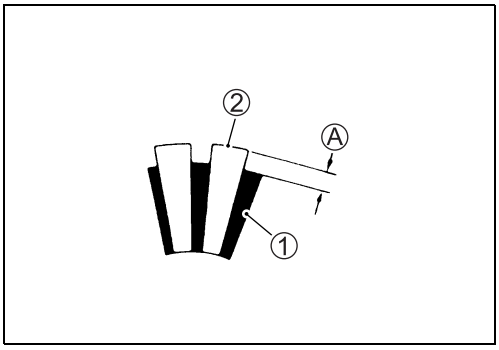

① Insulator
② Segment

ARMATURE COIL INSPECTION

Check for continuity between each segment and between each segment and the armature shaft using the multi-circuit tester.

If there is no continuity between the segments or there is continuity between the segments and shaft, replace the armature with a new one.

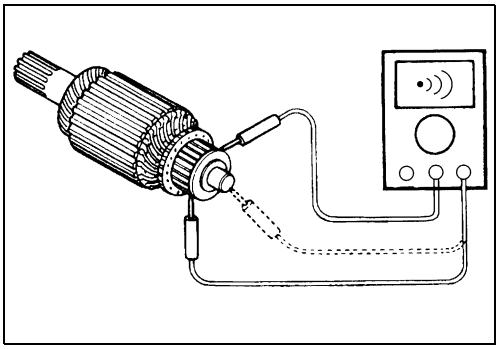

TOOL 09900-25008: Multi-circuit tester set

Tester knob indication: Continuity test (•)))

HOUSING END INSPECTION

- Inspect the bearing for abnormal noise and smooth rotation.
- Inspect the oil seal lip for damage or leakage.
  If any defects are found, replace the housing end with a new one.

STARTER MOTOR REASSEMBLY

Reassemble the starter motor in the reverse order of disassembly. Pay attention to the following points:

- Apply grease to the bearing and lip of oil seal.

99000-25010: SUZUKI SUPER GREASE "A" or equivalent

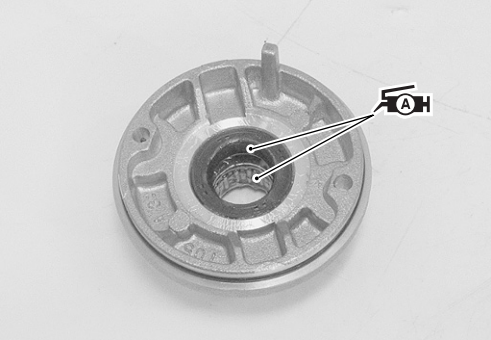

- Apply a little SUZUKI MOLY PASTE to the armature shaft end.

99000-25140: SUZUKI MOLY PASTE or equivalent

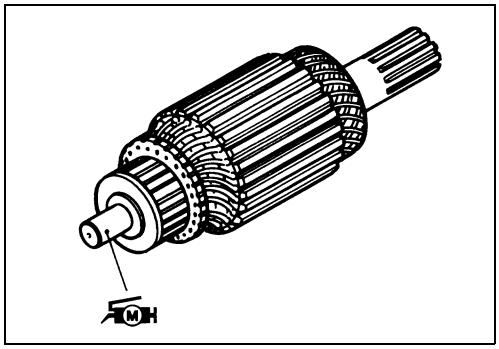

CAUTION

To prevent oil or water from entering into the motor inside, the O-rings must be replaced with new ones.

- Apply grease to the O-ring.

99000-25010: SUZUKI SUPER GREASE "A" or equivalent

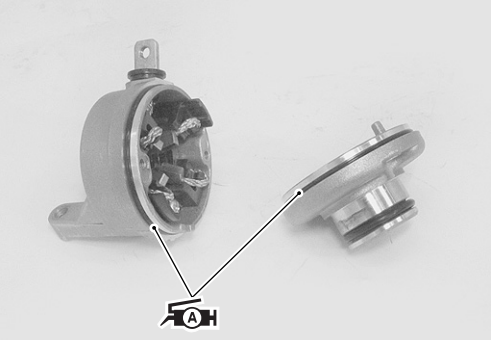

- Fit the washer ① to the housing end with the tabs aligned with the housing end cutaways, position the shim ② and assemble the starter motor.

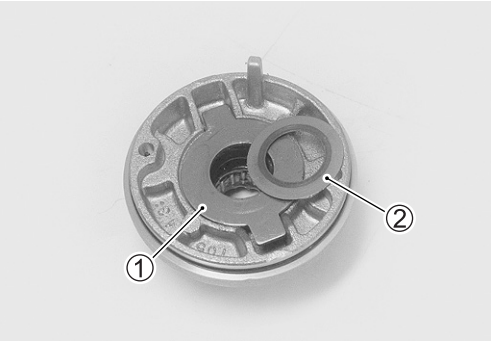

- Align the mark Ⓐ on the case with the lines Ⓑ on the housing end.
- Fit the O-rings ③ to the starter motor housing bolts and tighten them.

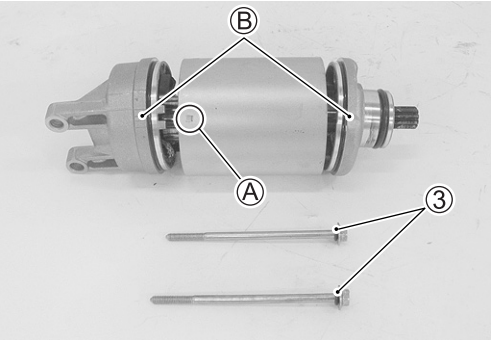

STARTER MOTOR INSTALLATION

- Apply grease to the O-ring ①.

99000-25010: SUZUKI SUPER GREASE "A" or equivalent

- Install the starter motor.
- Tighten the starter motor mounting bolts ① and lead wire screw ② to the specified torque.

Starter motor mounting bolt: 6 N·m (0.6 kgf-m)
Starter motor lead wire screw: 3 N·m (0.3 kgf-m)

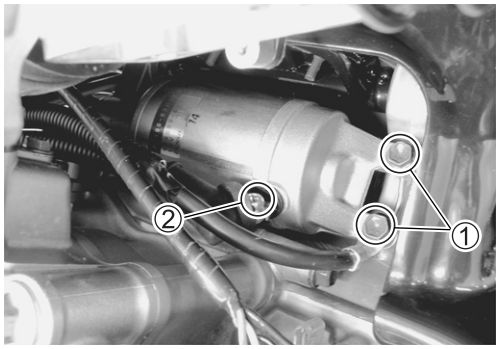

STARTER RELAY INSPECTION

- Remove the battery cover and right side leg shield. (☞8-8)
- Disconnect the battery ⊖ lead wire from the battery.
- Disconnect the starter motor read wire, battery ⊕ lead wire and starter relay coupler ①.
- Remove the starter relay ②.

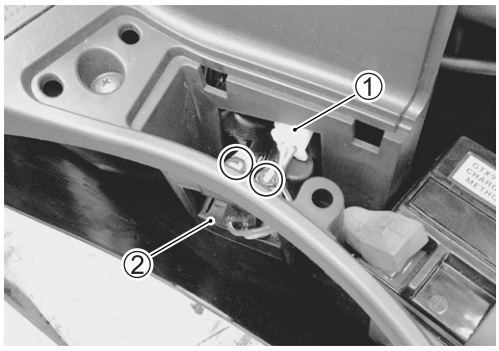

- Apply 12 V to Bl/W Ⓐ and R/W Ⓑ lead wires and check for continuity between the positive and negative terminals using the multi-circuit tester. If the starter relay clicks and continuity is found, the relay is OK.

TOOL 09900-25008: Multi-circuit tester set

Tester knob indication: Continuity test (•ı))

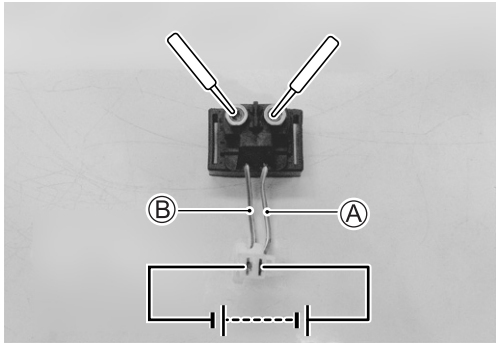

CAUTION

Do not apply a battery voltage to the starter relay for more than five seconds, since the relay coil may overheat and damaged.

- Measure the relay coil resistance between Bl/W Ⓐ and R/W Ⓑ lead wires using the multi-circuit tester. If the resistance is not within the specified value, replace the starter relay with a new one.

DATA Starter relay resistance: 3 – 6 Ω

Tester knob indication: Resistance (Ω)

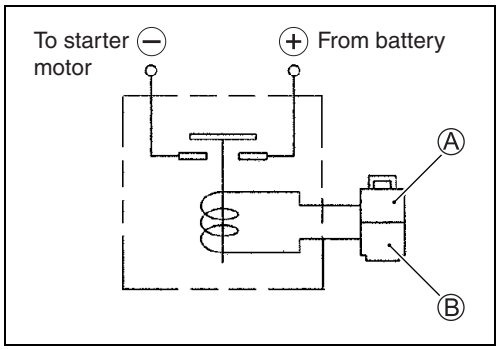

SIDE-STAND/IGNITION INTERLOCK SYSTEM PARTS INSPECTION

Check the interlock system for proper operation. If the interlock system does not operate properly, check each component for damage or abnormalities. If any abnormality is found, replace the component with a new one.

SIDE-STAND SWITCH INSPECTION

- Remove the front frame cover. (☞8-8)
- Disconnect the side-stand switch coupler ①.
- Measure the voltage between G and B/W lead wire.
  If the resistance is out of specification, replace the switch.

TOOL 09900-25008: Multi-circuit tester set

Tester knob indication: Diode test (⊣◀)

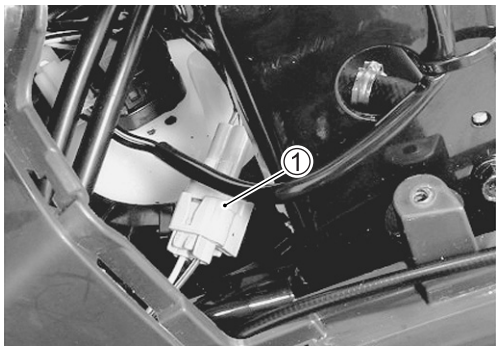

	G (⊕ probe)	B/W (⊖ probe)
ON (Side-stand up)	0.4 – 0.6 V	
OFF (Side-stand down)	1.4 V and more (Tester's battery voltage)	

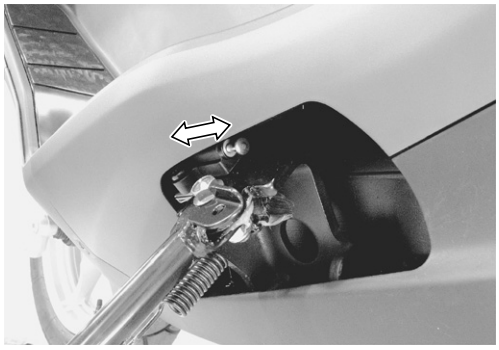

NOTE:
If the tester reads under 1.4 V when the tester probes are not connected, replace its battery.

SIDE-STAND RELAY INSPECTION

- Remove the front leg shield. (☞8-6)
- Remove the side-stand relay ①.

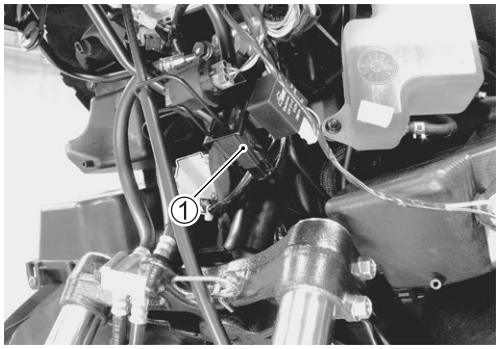

Check that no continuity exists between the terminals ② and ③. If continuity is found, replace the relay.

TOOL 09900-25008: Multi-circuit tester

Tester knob indication: Continuity test (•)))

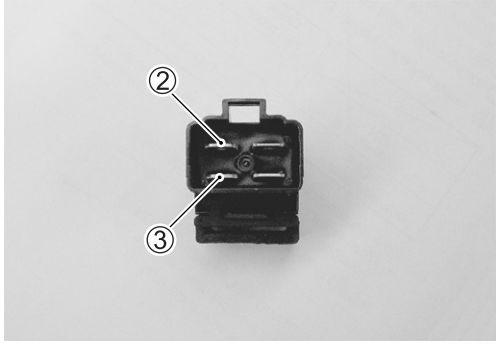

Check there is continuity between the terminals ② and ③ when 12 V battery voltage is applied; positive to the terminal ④ and negative to the terminal ⑤. If no continuity is noted, the relay must be replaced.

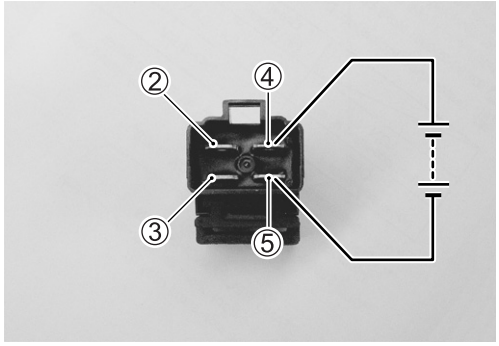

TURN SIGNAL RELAY INSPECTION

- Remove the front leg shield. (☞8-6)

If the turn signal light does not light, inspect the bulb, turn signal switch and circuit connection.

If the bulb, turn signal switch and circuit connection checked are all right, the turn signal relay may be faulty, replace it with a new one.

NOTE:

Be sure that the battery is in fully-charged condition.

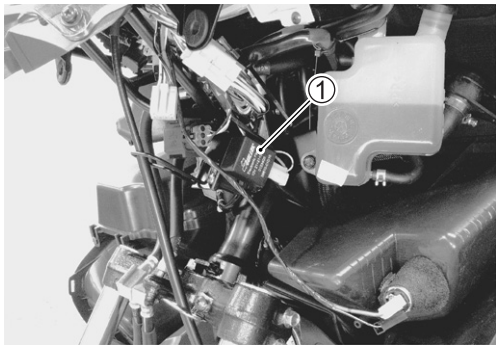

MAIN RELAY AND BRAKE START RELAY

Main relay and brake start relay can be checked in the same way.

- Remove the main relay ① or brake start relay ②.

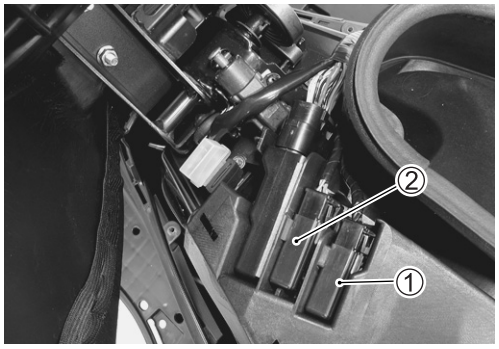

- Check that no continuity exists between the terminals Ⓐ and Ⓑ. If continuity is found, replace the relay.

TOOL 09900-25008: Multi-circuit tester set

Tester knob indication: Continuity test (•)))

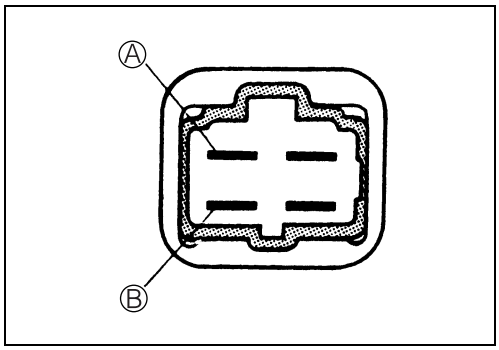

- Check there is continuity between the terminals Ⓐ and Ⓑ when 12V battery voltage is applied; positive to the terminal Ⓒ and negative to the terminal Ⓓ. If no continuity is noted, the relay must be replaced.

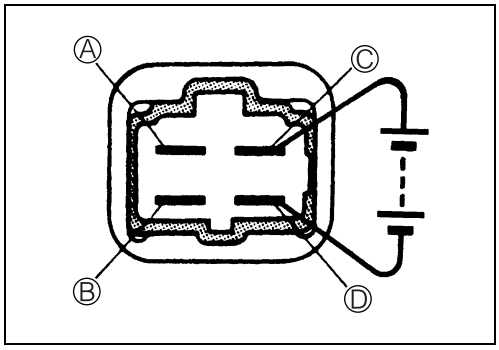

IGNITION SYSTEM

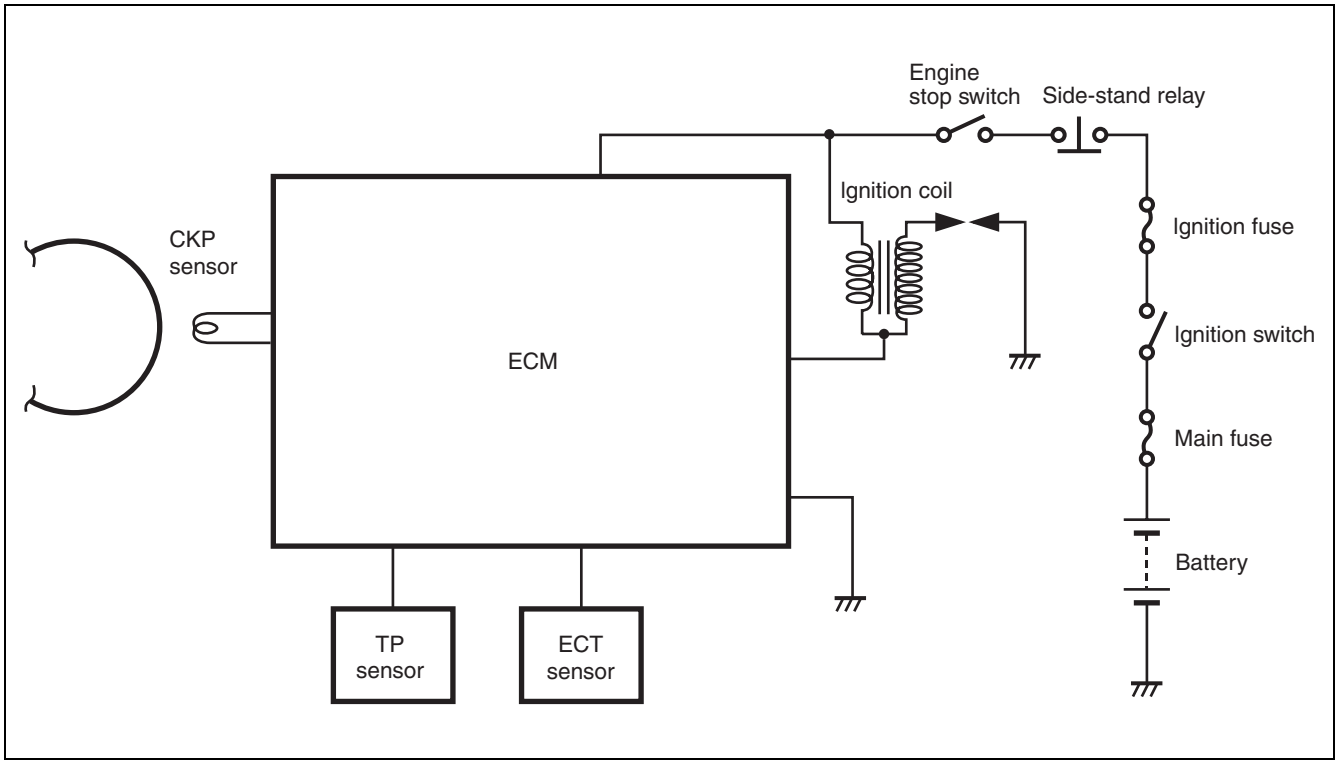

NOTE:
The fuel cut-off circuit is incorporated in this ECM in order to prevent over-running of engine. When engine speed reaches 10 000 r/min, this circuit cuts off fuel at the fuel injector.

CAUTION

Under no load, the engine can run over 10 000 r/min though the fuel cut-off circuit is effective, which may possibly cause engine damage. Do not run the engine without load over 10 000 r/min at anytime.

TROUBLESHOOTING

No spark or poor spark

NOTE:
Make sure the engine stop switch is in the "RUN" position and side-stand is in up-right position. Make sure the fuse is not blown and the battery is fully-charged before diagnosing.

Step 1

1) Check ignition system couplers for poor connections.
   Is there connection in the ignition switch couplers?

YES	Go to Step 2.
NO	Poor connection of couplers

Step 2

1) Measure the battery voltage between input lead wires (R/W and B/W) at the ECM with the ignition switch in the “ON” position.
   Is the voltage OK?

YES	Go to Step 3.
NO	• Faulty ignition switch. • Faulty turn signal/side-stand switch relay. • Faulty engine stop switch. • Broken wire harness or poor connection of related circuit couplers.

Step 3

Measure the ignition coil primary peak voltage. (☞9-24)

NOTE:

The ignition coil peak voltage inspection method is applicable only with the multi-circuit tester and peak volt adaptor.

Is the peak voltage OK?

YES	Go to Step 4.
NO	Go to Step 5.

Step 4

1) Inspect the spark plug. (☞2-7)
   Is the spark plug OK?

YES	• Improper spark plug connection. • Go to Step 5.
NO	Faulty spark plug.

Step 5

1) Inspect the ignition coil. (☞9-24 and -25)
   Is the ignition coil OK?

YES	Go to Step 6.
NO	Faulty ignition coil.

Step 6

1) Measure the CKP sensor peak voltage and its resistance.

NOTE:

The CKP sensor peak voltage inspection is applicable only with the multi-circuit tester and peak volt adaptor.

Is the peak voltage and resistance OK?

YES	• Faulty ECM. • Faulty wire harness. • Improper ignition coupler connection.
NO	Faulty CKP sensor.

INSPECTION

IGNITION COIL PRIMARY PEAK VOLTAGE

- Remove the front frame cover. (☞8-8)
- Disconnect spark plug cap.
- With the spark plug cap connected, place a new spark plug on the engine to ground it.

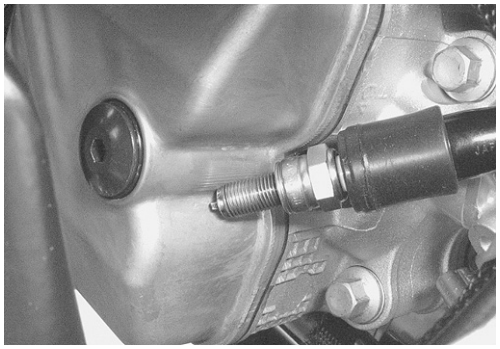

NOTE:

** Check that all the couplers are connected.*

** Check that the battery is fully charged.*

Measure the ignition coil primary peak voltage using the multi-circuit tester in the following procedure.

- Connect the multi-circuit tester with the peak volt adaptor as follows.

Ignition coil: ⊕ Probe: O/W lead wire connector
⊖ Probe: Ground

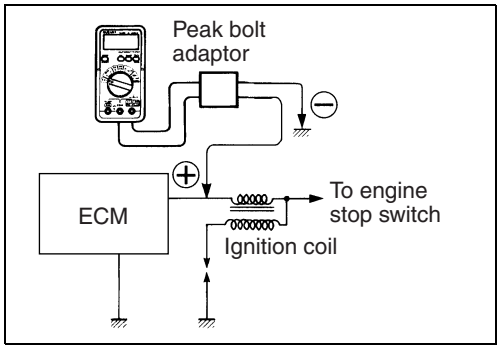

TOOL 09900-25008: Multi-circuit tester set

CAUTION

> **Before using the multi-circuit tester and peak volt adaptor, be sure to refer to the appropriate instruction manual.**

- Set the side-stand upright position, and then turn the ignition switch to the "ON" position.
- Grasp the front or rear brake lever.
- Press the starter button and allow the engine to crank for a few seconds, and then measure the ignition coil primary peak voltage.
- Repeat the above procedure a few times and measure the highest ignition coil primary peak voltage.

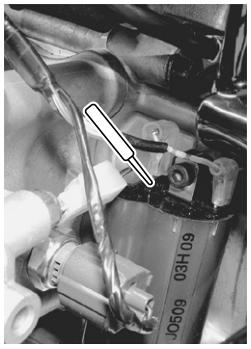

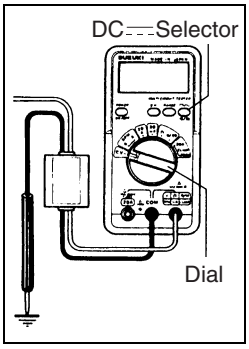

DATA Ignition coil primary peak voltage: 150 V and more

Tester knob indication: Voltage (⎓)

⚠ WARNING

> **While testing, do not touch the tester probes and spark plugs to prevent receiving an electric shock.**

If the peak voltage is lower than the specified values, inspect the ignition coil. (☞9-25)

IGNITION COIL RESISTANCE

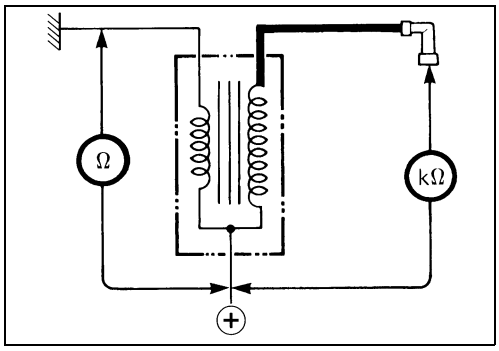

- Remove the front frame cover. (☞8-8)
- Disconnect the ignition coil read wires.

Measure the ignition coil resistance in both the primary and secondary windings. If the resistance is not within the standard range, replace the ignition coil with a new one.

DATA Ignition coil/plug cap resistance
Primary : 1.2 – 3.5 Ω (⊕ Terminal – ⊖ Terminal)
Secondary: 15 – 30 kΩ (Plug cap – ⊕ Terminal)

TOOL 09900-25008: Multi-circuit tester set

Tester knob indication: Resistance (Ω)

CKP SENSOR PEAK VOLTAGE

NOTE:
Be sure that all couplers are connected properly and the battery used is in fully-charged condition.

- Remove the right side leg shield. (☞8-8)
- Disconnect the CKP sensor lead wire coupler ① and connect the multi-circuit tester with the peak volt adaptor.

W wire (⊕ Probe) – G wire (⊖ Probe)

CAUTION

> **Before using the multi-circuit tester and peak volt adaptor, be sure to refer to the appropriate instruction manual.**

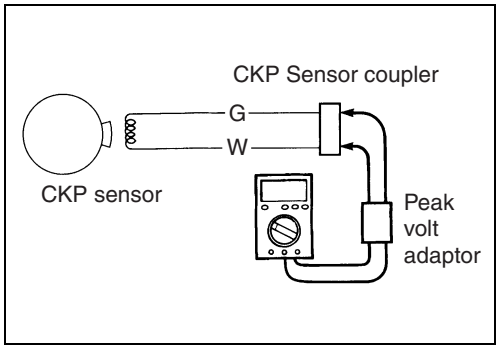

- Turn ignition switch to ON.
- Crank the engine a few seconds with the starter motor by depressing starter button and check the CKP sensor peak voltage.
- Repeat the above test procedure a few times and measure the highest peak voltage.

DATA CKP sensor peak voltage: 2.0 V and more (W – G)

TOOL 09900-25008: Multi-circuit tester set
09900-25009: Needle pointed probe set

Tester knob indication: Voltage (⎓)

If the peak voltage is lower than the standard range, check each coupler connection or replace the CKP sensor and inspect it again.
If the peak voltage is within the specification, check the continuity between the CKP sensor coupler and ECM coupler.

CAUTION

> **Normally, use the needle pointed probe to the backside of the lead wire coupler to prevent the terminal bend and terminal alignment.**

CKP SENSOR RESISTANCE

- Measure the resistance between the lead wires and ground. If the resistance is not as specified, the CKP sensor must be replaced.

CKP sensor resistance: 158 – 238 Ω (W – G)
∞ Ω (W – Ground)

09900-25008: Multi-circuit tester set

Tester knob indication: Resistance (Ω)

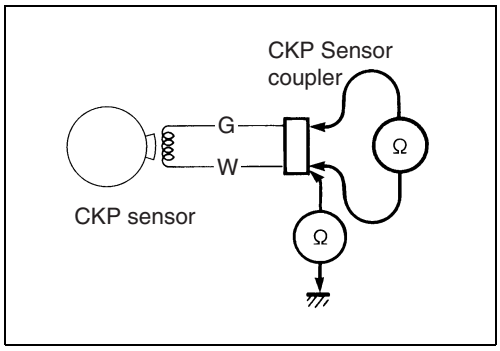

COMBINATION METER

REMOVAL AND DISASSEMBLY

- Remove the speedometer. (☞8-5)
- Disassemble the speedometer, as shown.

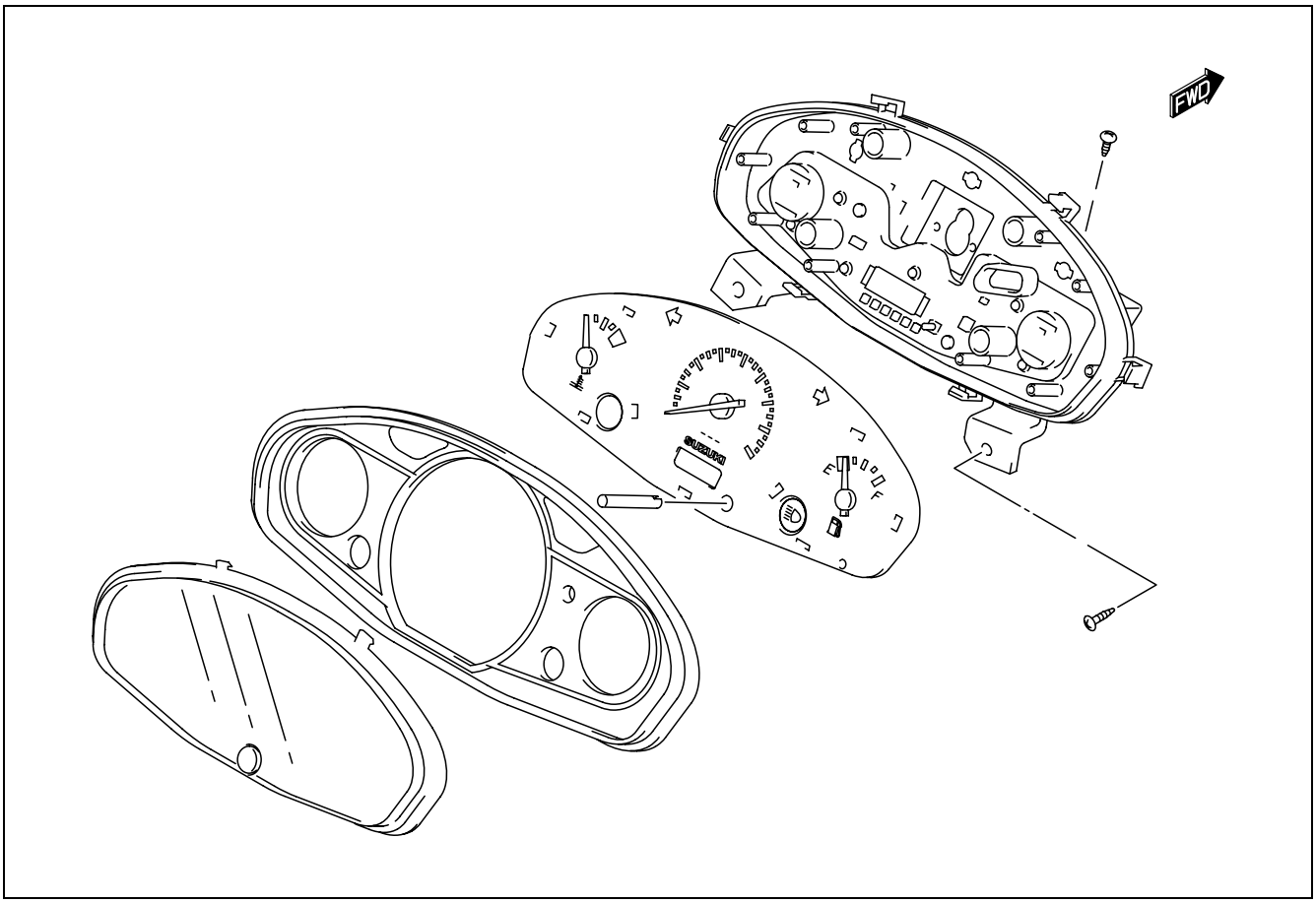

CAUTION

When disconnecting and reconnecting the speedometer coupler, make sure to turn OFF the ignition switch, or electronic parts may get damaged.

INSPECTION

WATER TEMPERATURE METER

- Remove the frame covers. (☞8-9)
- Disconnect the water temperature switch lead wire ①.
- With the ignition switch turned on and a variable resister connected between the B/G lead wire and ground check for the water temperature meter needle indication when the resistance is adjusted to the specified values.
  If the indication excessively deviates from the standard value, replace the combination meter assembly with a new one.

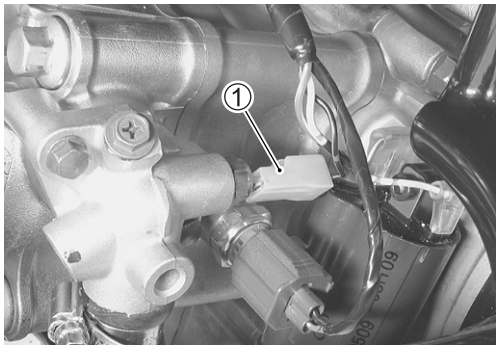

Water temperature meter needle indication		
Resistance Ω	Approx. 76.4 Ω	Approx. 16.1 Ω
Needle position	"C"	Red zone starting point

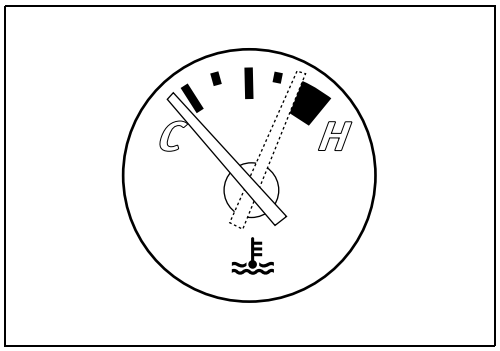

FUEL LEVEL METER

- Remove the front frame cover. (☞8-8)
- Disconnect the fuel pump coupler ①.

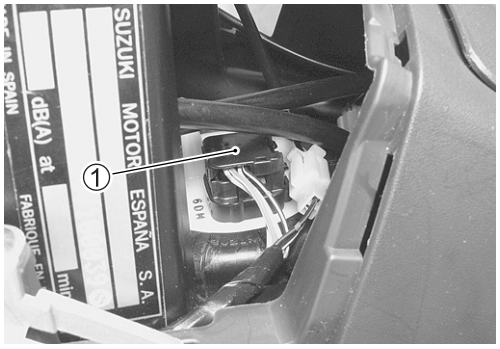

- Check that the fuel level meter moves properly when the resistor Ⓐ is connected between the fuel pump coupler Y/B and B/W terminals.
- If the indication excessively deviates from the standard value, replace the combination meter assembly with a new one.

NOTE:

** Prior to this inspection, check that the fuel gauge is functioning properly. (☞9-29)*

** When reading the meter indication, wait at least for 20 seconds after the resistor has been connected.*

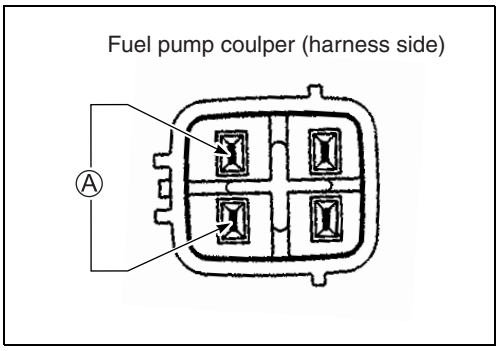

Resistor	Meter indication
Approx. 90 Ω	"E"
Approx. 10 Ω	"F"

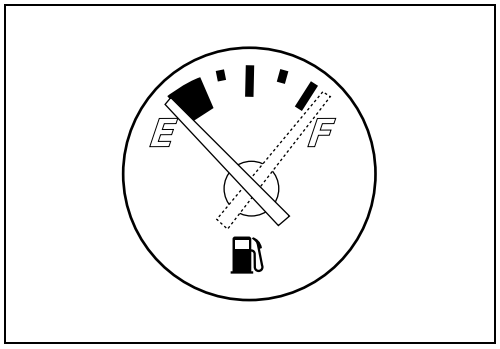

FUEL LEVEL GAUGE INSPECTION

Measure resistance between the terminals when the float is at the position instead below.

TOOL 09900-25008: Multi-circuit tester set

Fuel float position	Resistance between terminals
F:96.6 mm from tank mating face	Approx. 10 Ω
1/2:154.6 mm from tank mating face	Approx. 46 Ω
E:192.2 mm from tank mating face	Approx. 84 Ω

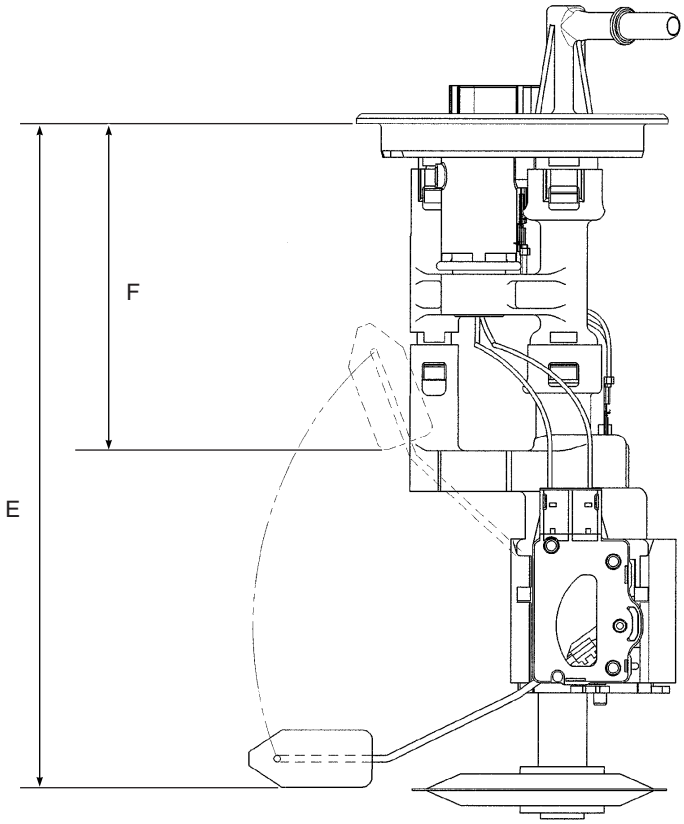

- If the resistance measured is out of the specification, replace the fuel pump a new one.

LAMPS

HEADLIGHT, POSITION LIGHT, BRAKE LIGHT/TAILLIGHT, LICENSE PLATE LIGHT AND TURN SIGNAL LIGHT

HEADLIGHT
12 V 55 W ① × 2

POSITION LIGHT
12 V 5 W ② × 2

TURN SIGNAL
Front: 12 V 21 W ③ × 2

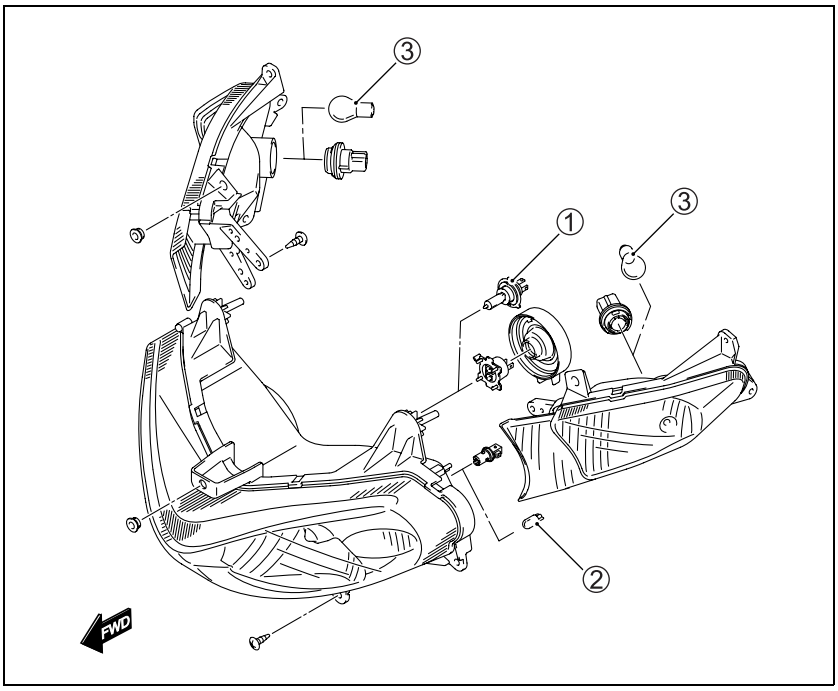

BRAKE LIGHT/TAILLIGHT
12 V 21/5 W ④ × 2

TURN SIGNAL
Rear: 12 V 16 W ⑤ × 2

LICENCE PLATE LIGHT
12 V 5 W ⑥

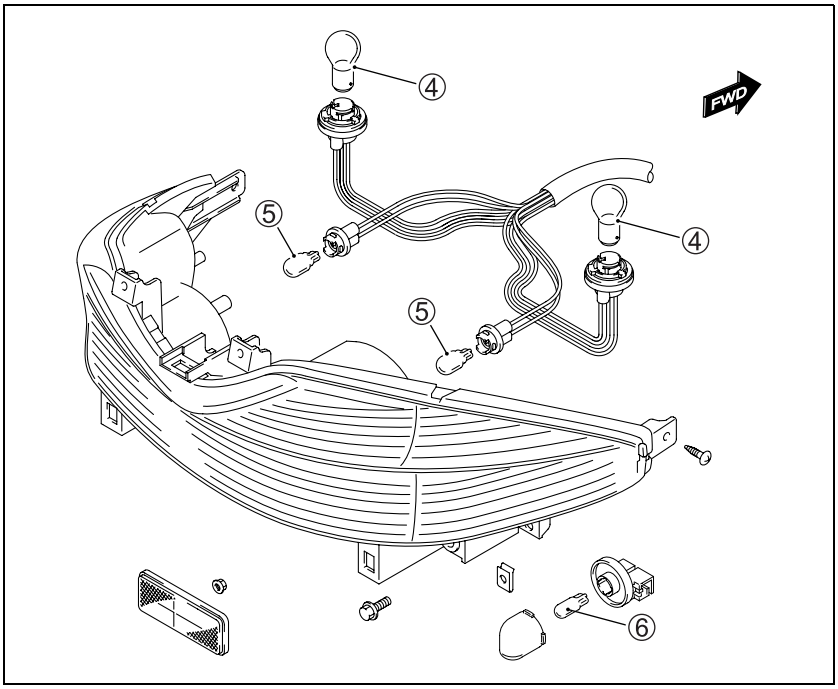

CAUTION

If you have touched the bulb with your bare hands, clean it with a cloth moistened with alcohol or soapy water to maintain lens clarity.

BULB REPLACEMENT

HEADLIGHT

- Remove the front leg shield. (☞8-6)
- Remove the headlight bulb terminals ① and rubber boot ②.

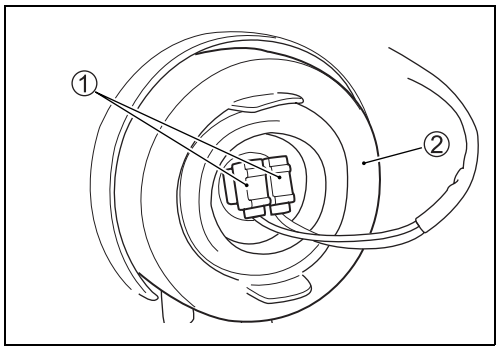

- Remove the headlight bulb by unhooking the bulb holder spring ③.
- Install new bulb and reassemble the headlight in the reverse order of the above procedure.

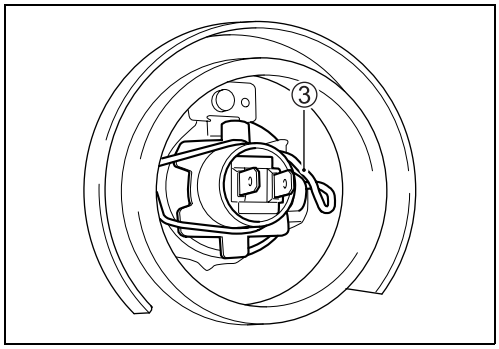

⚠ WARNING

The headlight uses a halogen bulb which operates at a high temperature. Therefore, handle the bulb after sufficiently cooled.

CAUTION

*** A fouled glass can cause damage to the bulb when lit. If the bulb is contacted with bare hand, wipe clean with a cloth damped with alcohol or detergent.**
*** Do not use the bulb of a wattage other than specification.**

POSITION LIGHT

- Remove the front leg shield. (☞8-6)
- Turn the socket counterclockwise and remove it.

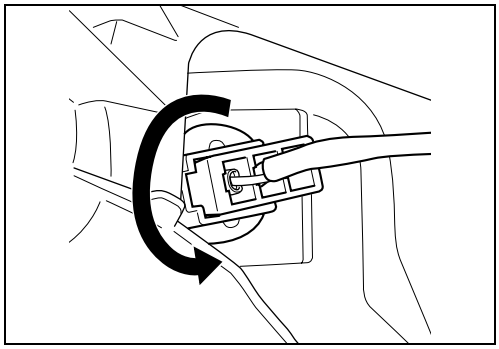

- Replace the bulb with a new one.
- Reinstall the socket and front leg shield in the reverse order of removal.

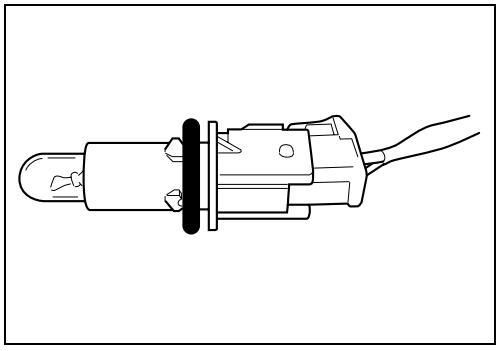

FRONT TURN SIGNAL LIGHT

- Remove the front leg shield. (☞8-6)
- Turn the socket counterclockwise and remove it.

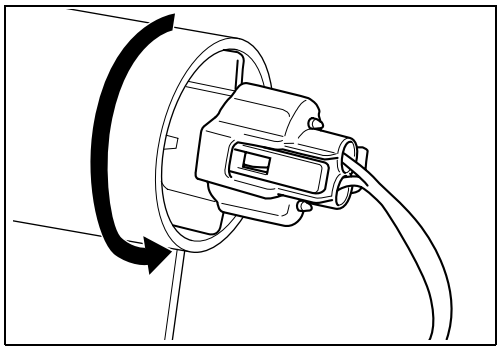

- Replace the bulb with a new one.
- Reinstall the socket and front leg shield in the reverse order of removal.

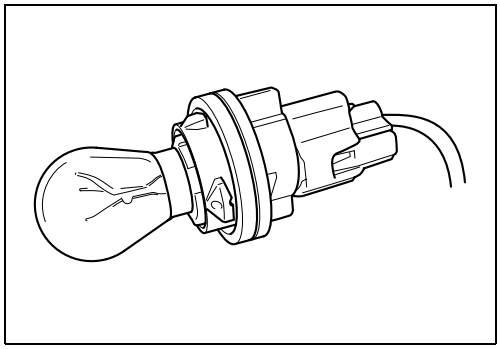

REAR TURN SIGNAL LIGHT

- Remove the lower frame cover. (☞8-9)
- Remove the screws and fasteners.
- Move the rear fender ① downward.

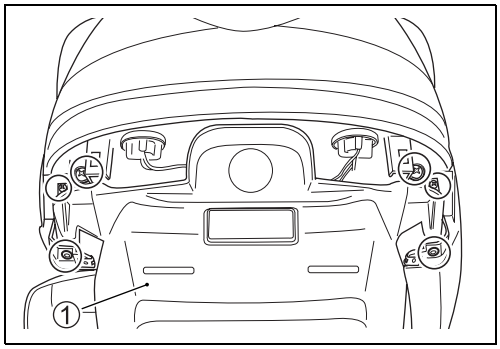

- Turn the socket counterclockwise and remove it.

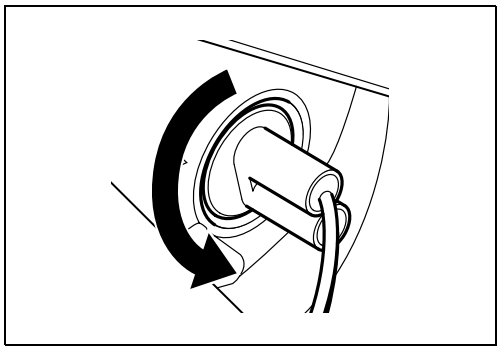

- Replace the bulb with a new one.
- Reinstall the socket, rear fender and lower frame cover in the reverse order of removal.

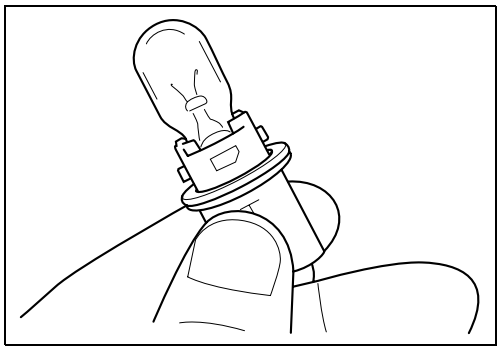

BRAKE LIGHT/TAILLIGHT

- Remove the lower frame cover. (☞8-9)
- Move the rear fender downward.
- Turn the socket counterclockwise and remove it.

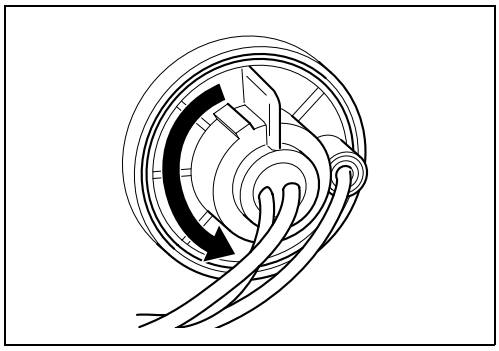

- Replace the bulb with a new one.
- Reinstall the socket and lower frame cover in the reverse order of removal.

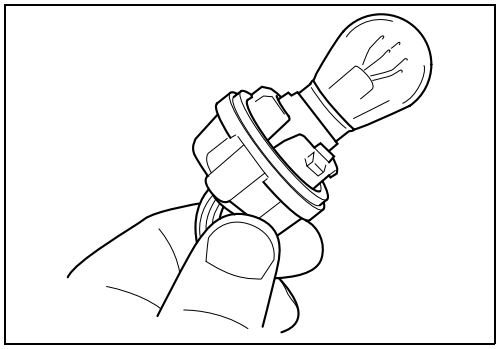

TRUNK LIGHT

- Remove the lower frame cover. (☞8-9)
- Move the rear fender downward.
- Pull out the socket.

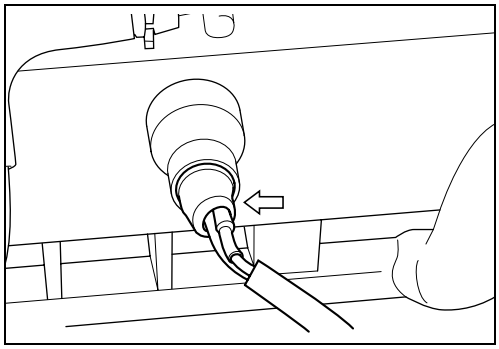

- Replace the bulb with a new one.
- Reinstall the socket and lower frame cover in the reverse order of removal.

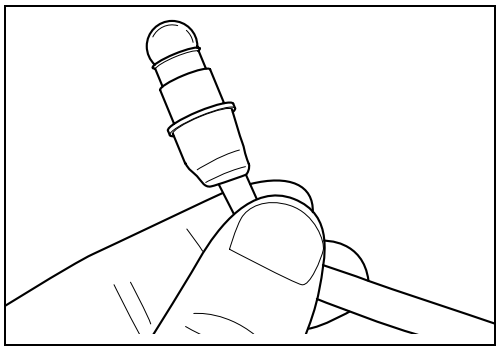

LICENSE PLATE LIGHT

- Turn the license plate light lens counterclockwise and remove it.

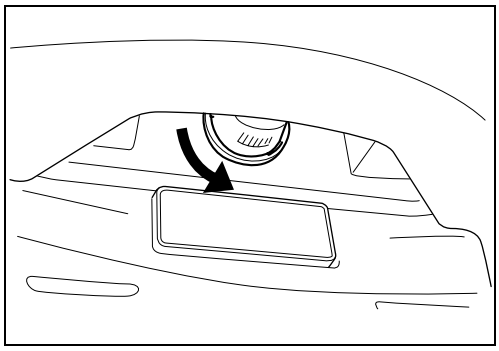

- Replace the bulb with a new one.
- Reinstall the lens.

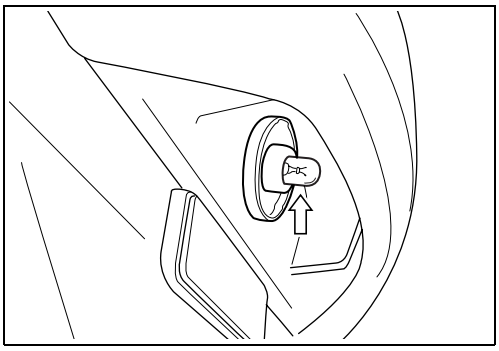

HEADLIGHT BEAM ADJUSTMENT

The headlight beam can be adjusted vertically if necessary.

- Turn the adjuster ① clockwise or counterclockwise with a screwdriver.

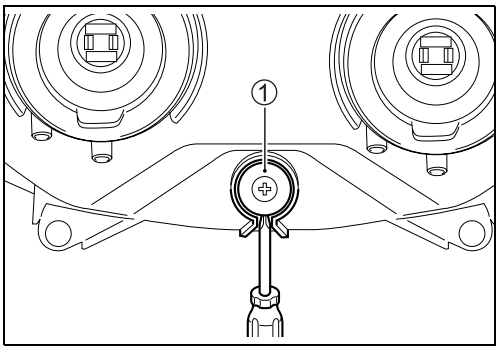

SWITCHES

IGNITION SWITCH REMOVAL AND INSTALLATION

REMOVAL

- Remove the front leg shield. (☞8-6)
- Remove the right inner front box ①.

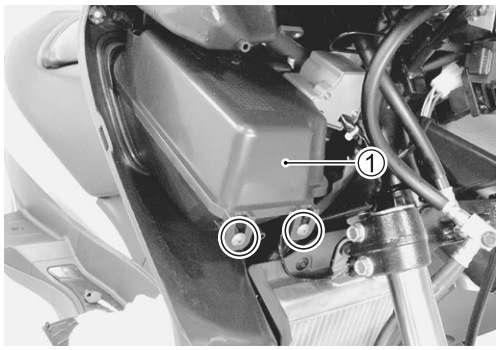

- Remove the torx bolt and nut.

TOOL 09930-11930: Torx bit (JT30H)
09930-11940: Bit holder

- Disconnect the seat lock cable.
- Remove the ignition switch.

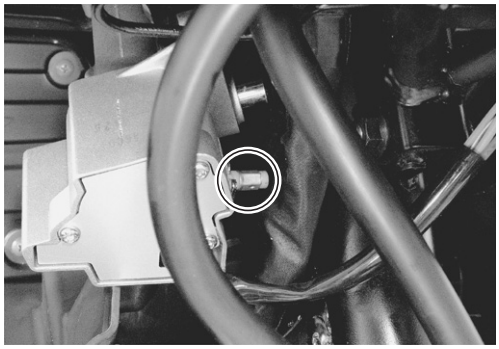

IGNITION SWITCH INSTALLATION

Install the ignition switch in the reverse order of removal.
Pay attention to the following points:

- Apply THREAD LOCK SUPER to the bolts.

CAUTION

When reusing the bolts, clean thread and apply the THREAD LOCK SUPER.

1322 99000-32110: THREAD LOCK SUPER "1322" or equivalent

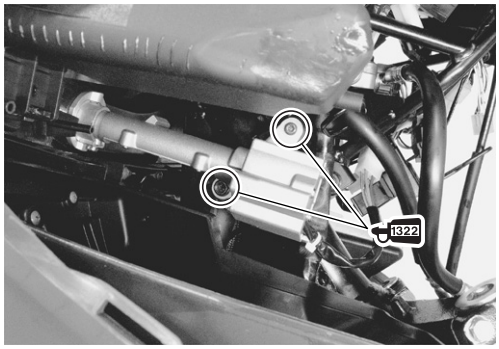

INSPECTION

Check for continuity between each terminal.
If any abnormal condition is noted, replace the switch.

TOOL 09900-25008: Multi-circuit tester

IGNITION SWITCH

Position \ Color	R	O	G/W	O/Y
ON	○	○	○	○
OFF				
LOCK				

DIMMER SWITCH

Position \ Color	W	Y	Y/W
HI (≡D)		○	○
LO (≡D)	○		○

STARTER BUTTON

Position \ Color	B/Bl	Y/G	O/R	Y/W
•			○	○
PUSH (⚡)	○	○		

HORN BUTTON

Position \ Color	B/Bl	B/W
•		
PUSH	○	○

PASSING LIGHT SWITCH

Position \ Color	O/R	Y
•		
PUSH	○	○

ENGINE STOP SWITCH

Position \ Color	O/B	O/W
OFF (⊗)		
RUN (↻)	○	○

FRONT BRAKE SWITCH

Position \ Color	B/R	B/Bl
OFF		
ON	○	○

COMBINATION BRAKE SWITCH

Position \ Color	B/Y	B/Y
OFF		
ON	○	○

TURN SIGNAL SWITCH

Position \ Color	Lg	Lbl	B
L		○	○
PUSH			
R	○	○	

TRUNK BOX LIGHT SWITCH

Position \ Color	B	B/W
PUSH	○	○
•		

BATTERY

SPECIFICATIONS

Type designation	GTX9-BS
Capacity	12 V, 28.8 kC (8 Ah)/10 HR

① Upper cover breather
② Cathode plates
③ Stopper
④ Filter
⑤ Terminal
⑥ Safety valve
⑦ Anode plates
⑧ Separator (Fiberglass plate)

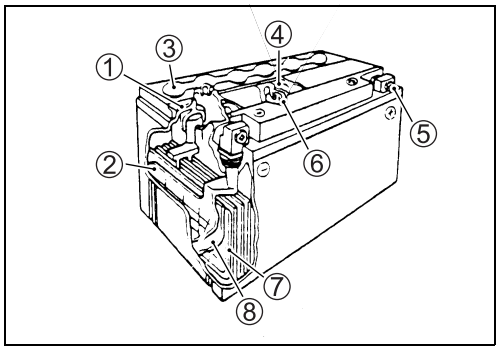

INITIAL CHARGING

Filling electrolyte

- Remove the aluminum tape ① sealing the battery electrolyte filler holes Ⓐ.

NOTE:
When filling electrolyte, the battery must be removed from the motorcycle and must be put on the level ground.

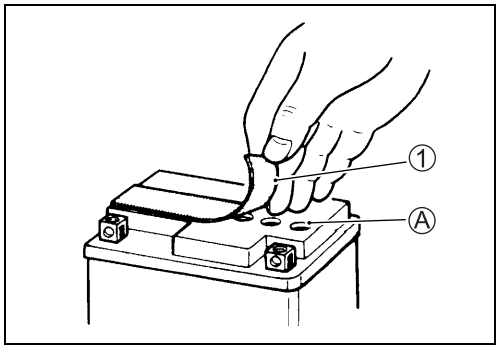

- Remove the caps ②.

NOTE:
** After filling the electrolyte completely, use the removed cap ② as sealing caps of battery-filler holes.*
** Do not remove or pierce the sealed areas ③ of the electrolyte container.*

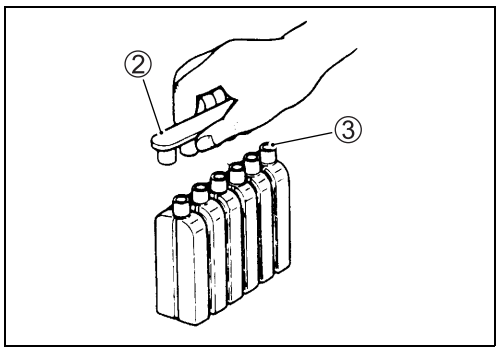

- Insert the nozzles of the electrolyte container ④ into the battery's electrolyte filler holes, holding the container firmly so that it does not fall. Take precaution not to allow any of the fluid to spill.

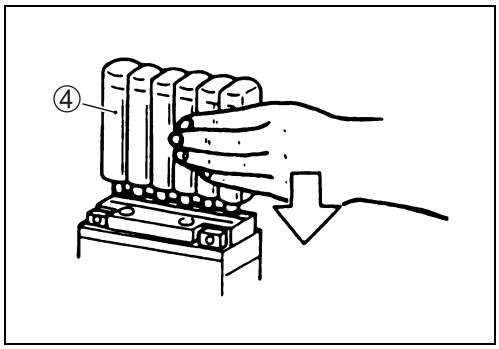

- Make sure air bubbles ⑤ are coming up each electrolyte container, and leave in this position for about more than 20 minutes.

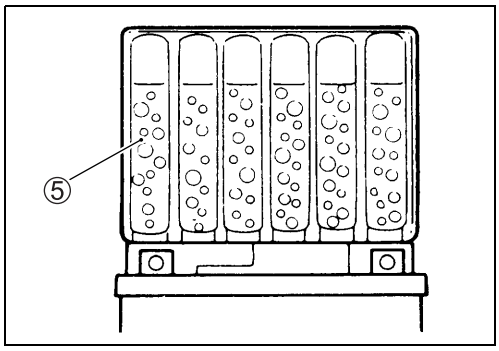

NOTE:
If no air bubbles are coming up from a filler port, tap the bottom of the electrolyte container two or three times.
Never remove the container from the battery.

- After confirming that the electrolyte has entered the battery completely, remove the electrolyte containers from the battery. Wait for about 20 minutes.

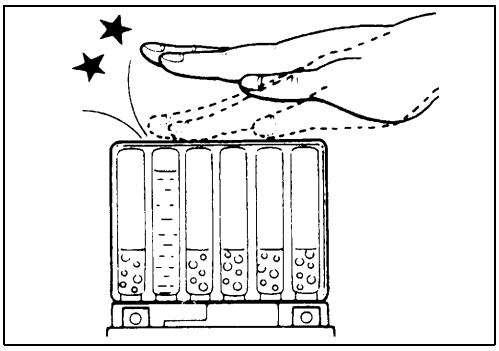

- Insert the caps ⑥ into the filler holes, pressing in firmly so that the top of the caps do not protrude above the upper surface of the battery's top cover.

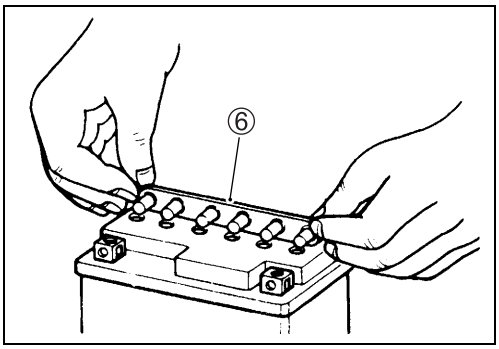

CAUTION

*** Never use anything except the specified battery.**
*** Once the caps have been installed to the battery, do not remove the caps.**
*** Do not tap the caps with a tool such as hammer when installing them.**

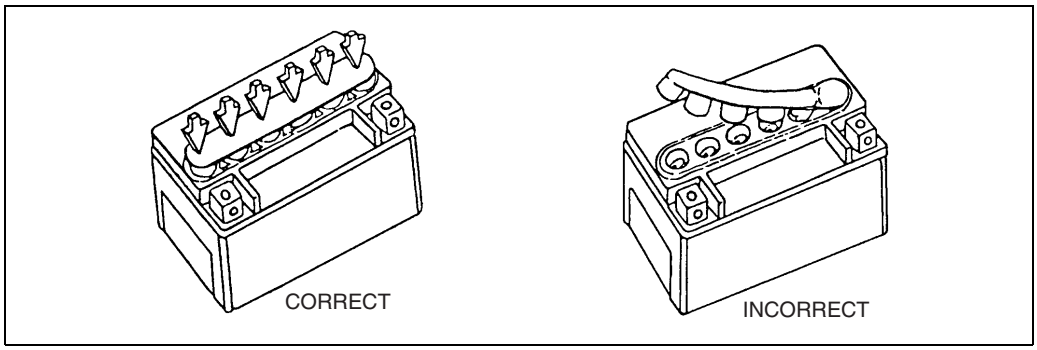

For initial charging, use the charger specially designed for MF battery.

CAUTION

*** For charging the battery, make sure to use the charger specially designed for MF battery. Otherwise, the battery may be overcharged resulting in shortened service life.**
*** Do not remove the cap during charging.**
*** Position the battery with the cap facing upward during charging.**

SERVICING

Visually inspect the surface of the battery container. If any signs of cracking or electrolyte leakage from the sides of the battery have occurred, replace the battery with a new one. If the battery terminals are found to be coated with rust or an acidic white powdery substance, clean the battery terminals with sandpaper.

RECHARGING OPERATION

- Using the multi-circuit tester, check the battery voltage. If the voltage reading is the 12.0 V (DC) and less, recharge the battery with a battery charger.

Ⓐ Charging period
Ⓑ Stop charging

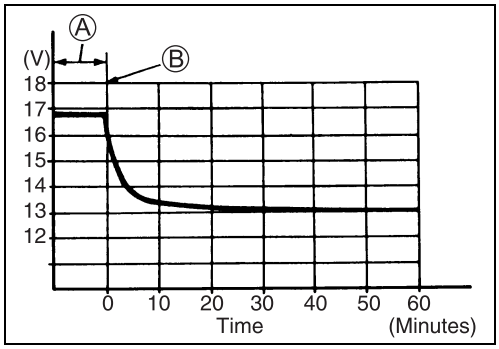

CAUTION

> *** When recharging the battery, remove the battery from the motorcycle.**
> *** Do not remove the caps on the battery top while recharging.**

Recharging time: 0.9 A for 5 to 10 hours or 9 A for 0.5 hour

CAUTION

> **Be careful not to permit the charging current to exceed 9 A at any time.**

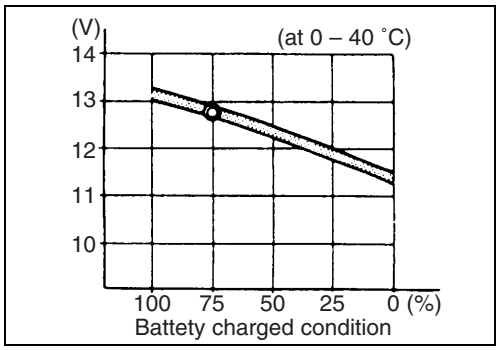

- After recharging, wait for 30 minutes and more and check the battery voltage with a multi-circuit tester.
- If the battery voltage is the 12.5 V and less, recharge the battery again.
- If battery voltage is still 12.5 V and less, after recharging, replace the battery with a new one.
- When the motorcycle is not used for a long period, check the battery every 1 month to prevent the battery discharge.

SERVICING INFORMATION

CONTENTS

TROUBLESHOOTING

FI SYSTEM MALFUNCTION CODE AND DEFECTIVE CONDITION

DTC No.		DETECTED ITEM	DETECTED FAILURE CONDITION	CHECK FOR
00		NO FAULT	————	————
12		CKP sensor	The signal does not reach ECM for 3 sec. or more, after receiving the starter signal.	CKP sensor wiring and mechanical parts CKP sensor, lead wire/coupler connection
P0335				
13		IAP sensor	The sensor should produce following voltage. 0.5 V ≦ sensor voltage < 4.85 V In other than the above range, 13 (P0105) is indicated.	IAP sensor, lead wire/coupler connection
P0105	H		Sensor voltage is higher than specified value.	IAP sensor circuit open or shorted to VCC or ground circuit open
	L		Sensor voltage is lower than specified value.	IAP sensor circuit shorted to ground or VCC circuit open
14		TP sensor	The sensor should produce following voltage. 0.2 V ≦ sensor voltage < 4.80 V In other than the above range, 14 (P0120) is indicated.	TP sensor, lead wire/coupler connection
P0120	H		Sensor voltage is higher than specified value.	TP sensor circuit shorted to VCC or ground circuit open
	L		Sensor voltage is lower than specified value.	TP sensor circuit open or shorted to ground or VCC circuit open
15		ECT sensor	The sensor voltage should be the following. 0.15 V ≦ sensor voltage < 4.85 V In other than the above range, 15 (P0115) is indicated.	ECT sensor, lead wire/coupler connection
P0115	H		Sensor voltage is higher than specified value.	ECT sensor circuit open or ground circuit open
	L		Sensor voltage is lower than specified value.	ECT sensor circuit shorted to ground

DTC No.		DETECTED ITEM	DETECTED FAILURE CONDITION	CHECK FOR
23		TO sensor	The sensor voltage should be the following for 2 sec. and more, after ignition switch is turned ON. 0.2 V ≦ sensor voltage < 4.7 V In other than the above value, 23 (P1651) is indicated.	TO sensor, lead wire/coupler connection
P1651	H		Sensor voltage is higher than specified value.	TO sensor circuit shorted to VCC or ground circuit open
	L		Sensor voltage is lower than specified value.	TO sensor circuit open or shorted to ground or VCC circuit open
24		Ignition signal	CKP sensor (pick-up coil) signal is produced, but signal from ignition coil is interrupted 8 times or more continuously. In this case, the code 24 (P0351) is indicated.	Ignition coil, wiring/coupler connection, power supply from the battery
P0351				
32		Fuel injector	CKP sensor (pickup coil) signal is produced, but fuel injector signal is interrupted 4 times or more continuously. In this case, the code 32 (P0201) is indicated.	Primary fuel injector, wiring/coupler connection, power supply to the injector
P0201				
40 (P0505)		ISC valve	The circuit voltage of motor drive is unusual. Idle speed is higher than the normal condition.	ISC valve circuit open or shorted to ground Power source circuit open ISC valve is fixed to full open Disconnected ISC valve hose
40 (P0506)			Idle speed is lower than the desired idle speed.	Air passage clogged ISC valve is fixed ISC valve pre-set position is incorrect
40 (P0507)			Idle speed is higher than the desired idle speed.	ISC valve hose connection ISC valve is fixed ISC valve pre-set position is incorrect
41		Fuel pump	No voltage is applied to the fuel pump, although main relay is turned ON, or voltage is applied to fuel pump although main relay is turned OFF.	Main relay, lead wire/coupler connection, power source to main relay and fuel injectors
P0230	H		Voltage is applied to fuel pump although main relay is turned OFF.	Main relay switch circuit shorted to power source Main relay (switch side)
	L		No voltage is applied to the fuel pump, although main relay is turned ON.	Main relay circuit open or short Main relay (coil side)

DTC No.	DETECTED ITEM	DETECTED FAILURE CONDITION	CHECK FOR
42 P1650	Ignition switch	Ignition switch signal is not input to the ECM.	Ignition switch, lead wire/coupler, etc.
44 P0130	HO2 sensor	HO2 sensor output voltage is not input to ECM during engine operation and running condition. In other than the above value, 44 (P0130) is indicated.	HO2 sensor circuit open or shorted to ground

ENGINE

Complaint	Symptom and possible causes	Remedy
Engine will not start or is hard to start.	**Compression too low**	
	1. Valve clearance out of adjustment	Adjust.
	2. Worn valve guides or poor seating of valves	Repair or replace.
	3. Mistiming valves	Adjust.
	4. Excessively worn piston rings	Replace.
	5. Worn-down cylinder bore	Replace.
	6. Too slowly starter motor cranks	See electrical section.
	7. Poor seating of spark plug	Retighten.
	Plug not sparking	
	1. Fouled spark plug	Clean.
	2. Wet spark plug	Clean and dry.
	3. Defective ignition coil	Replace.
	4. Defective CKP sensor	Replace.
	5. Defective ECM	Replace.
	6. Open-circuited wiring connections	Repair or replace.
	No fuel reaching the intake manifold	
	1. Clogged fuel filter or fuel hose	Clean or replace.
	2. Defective fuel pump	Replace.
	3. Defective fuel pressure regulator	Replace.
	4. Defective fuel injector	Replace.
	5. Defective ECM	Replace.
	6. Open-circuited wiring connections	Repair or replace.
	Incorrect fuel/air mixture	
	1. Defective fuel pump	Replace.
	2. Defective fuel pressure regulator	Replace.
	3. Defective TP sensor	Replace.
	4. Defective CKP sensor	Replace.
	5. Defective IAP sensor	Replace.
	6. Defective ECM	Replace.
	7. Defective ECT sensor	Replace.

Complaint	Symptom and possible causes	Remedy
Engine idles poorly.	1. Valve clearance out of adjustment	Adjust.
	2. Poor seating of valves	Replace or repair.
	3. Defective valve guides	Replace.
	4. Worn rocker arms or cam surfaces	Replace.
	5. Too wide spark plug gap	Adjust or replace.
	6. Defective ignition coil	Replace.
	7. Defective CKP sensor	Replace.
	8. Defective ECM	Replace.
	9. Defective TP sensor	Replace.
	10. Defective ISC valve	Replace.
	11. Defective fuel pump	Replace.
Engine stalls often.	**Incorrect fuel/air mixture**	
	1. Defective IAP sensor or circuit	Repair or replace.
	2. Clogged fuel filter	Clean or replace.
	3. Defective fuel pump	Replace.
	4. Defective fuel pressure regulator	Replace.
	5. Defective ECT sensor	Replace.
	6. Defective thermostat	Replace.
	Fuel injector improperly operating	
	1. Defective fuel injector	Replace.
	2. No injection signal from ECM	Repair or replace.
	3. Open or short circuited wiring connections	Repair or replace.
	4. Defective battery or low battery voltage	Replace or recharge.
	Control circuit or sensor improperly operating	
	1. Defective ECM	Replace.
	2. Defective fuel pressure regulator	Replace.
	3. Defective TP sensor	Replace.
	4. Defective CKP sensor	Replace.
	5. Defective ECT sensor	Replace.
	Engine internal parts improperly operating	
	1. Fouled spark plug	Clean.
	2. Defective CKP sensor or ECM	Replace.
	3. Clogged fuel hose	Clean.
	4. Valve clearance out of adjustment	Adjust.

Complaint	Symptom and possible causes	Remedy
Noisy engine	**Excessive valve chatter**	
	1. Too large valve clearance	Adjust.
	2. Weakened or broken valve springs	Replace.
	3. Worn rocker arm or cam surface	Replace.
	4. Worn and burnt camshaft journal	Replace.
	Noise seems to come from piston	
	1. Worn down piston or cylinder	Replace.
	2. Combustion chamber fouled with carbon	Clean.
	3. Worn piston pin or piston pin bore	Replace.
	4. Worn piston rings or ring grooves	Replace.
	Noise seems to come from timing chain	
	1. Stretched chain	Replace.
	2. Worn sprockets	Replace.
	3. Tension adjuster not working	Repair or replace.
	Noise seems to come from clutch	
	1. Worn or slipping drive belt	Replace.
	2. Worn rollers in the movable drive face	Replace.
	Noise seems to come from crankshaft	
	1. Rattling bearings due to wear	Replace.
	2. Worn and burnt big-end bearings	Replace.
	3. Worn and burnt journal bearings	Replace.
	4. Too large thrust clearance	Replace thrust bearing.
	Noise seems to come from final gear box	
	1. Worn or rubbing gears	Replace.
	2. Badly worn splines	Replace.
	3. Badly worn bearings	Replace.
	Noise seems to come from water pump	
	1. Too much play on pump shaft bearing	Replace.
	2. Worn or damaged impeller shaft	Replace.
	3. Worn or damaged mechanical seal	Replace.
	4. Contact between pump case and impeller	Replace.

Complaint	Symptom and possible causes	Remedy
Engine runs poorly in high speed range.	**Defective engine internal/electrical parts**	
	1. Weakened valve springs	Replace.
	2. Worn camshaft	Replace.
	3. Valve timing out of adjustment	Adjust.
	4. Too narrow spark plug gap	Adjust.
	5. Ignition not advanced sufficiently due to poorly working timing advance circuit	Replace ECM.
	6. Defective ignition coil	Replace.
	7. Defective CKP sensor	Replace.
	8. Defective ECM	Replace.
	9. Clogged air cleaner elements	Clean.
	10. Clogged fuel hose, resulting in inadequate fuel supply to injector	Clean and prime.
	11. Defective fuel pump	Replace.
	12. Defective TP sensor	Replace.
	Defective air flow system	
	1. Clogged air cleaner elements	Clean or replace.
	2. Defective throttle valve	Adjust or replace.
	3. Sucking air from throttle body joint or intake pipe	Retighten or replace.
	4. Defective ECM	Replace.
	Defective control circuit or sensor	
	1. Low fuel pressure	Repair or replace.
	2. Defective TP sensor	Replace.
	3. Defective CKP sensor	Replace.
	4. Defective IAP sensor	Replace.
	5. Defective ECM	Replace.

Complaint	Symptom and possible causes	Remedy
Engine lacks power.	**Defective engine internal/electrical parts**	
	1. Loss of valve clearance	Adjust.
	2. Weakened valve springs	Replace.
	3. Valve timing out of adjustment	Adjust.
	4. Worn piston rings or cylinder	Replace.
	5. Poor seating of valves	Repair.
	6. Fouled spark plug	Clean or replace.
	7. Incorrect spark plug	Adjust or replace.
	8. Clogged fuel injector	Replace.
	9. Clogged air cleaner elements	Clean or replace.
	10. Sucking air from throttle body joint or intake pipe	Retighten or replace.
	11. Too much engine oil	Drain out excess oil.
	12. Defective fuel pump or ECM	Replace.
	13. Defective CKP sensor or ignition coil	Replace.
	14. Slipping or worn drive belt	Clean or replace.
	Defective control circuit or sensor	
	1. Low fuel pressure	Repair or replace.
	2. Defective TP sensor	Replace.
	3. Defective CKP sensor	Replace.
	4. Defective IAP sensor	Replace.
	5. Defective ECM	Replace.

Complaint	Symptom and possible causes	Remedy
Engine overheats	**Defective engine internal parts**	
	1. Heavy carbon deposit on piston crown	Clean.
	2. Not enough oil in the engine	Add oil.
	3. Defective oil pump or clogged oil circuit	Replace or clean.
	4. Sucking air from throttle body joint or intake pipe	Retighten or replace.
	5. Use incorrect engine oil	Change.
	6. Defective cooling system	See cooling section.
	Lean fuel/air mixture	
	1. Short-circuited IAP sensor/lead wire	Repair or replace.
	2. Sucking air from throttle body joint or intake pipe	Retighten or replace.
	3. Defective fuel injector	Replace.
	4. Defective ECT sensor	Replace.
	Other factors	
	1. Ignition timing is too advanced due to defective timing advance system (ECT sensor, CKP sensor and ECM).	Replace.
Dirty or heavy exhaust smoke	1. Too much engine oil in the engine	Drain out excess oil.
	2. Worn piston rings or cylinder	Replace.
	3. Worn valve guides	Replace.
	4. Scored or scuffed cylinder wall	Replace.
	5. Worn valve stems	Replace.
	6. Defective valve stem oil seals	Replace.
	7. Worn oil ring side rails	Replace.
Slipping clutch	1. Worn or damaged clutch shoes	Replace.
	2. Weakened clutch shoe springs	Replace.
	3. Worn clutch housing	Replace.
	4. Worn or slipping drive belt	Replace.

RADIATOR (COOLING SYSTEM)

Complaint	Symptom and possible causes	Remedy
Engine overheats	1. Not enough engine coolant	Add coolant.
	2. Radiator core clogged with dirt or scale	Clean.
	3. Faulty cooling fan	Repair or replace.
	4. Defective cooling fan thermo-switch	Replace.
	5. Defective ECM	Replace.
	6. Defective ECT sensor	Replace.
	7. Clogged water passage	Clean.
	8. Air trapped in the cooling circuit	Bleed air.
	9. Defective water pump	Replace.
	10. Use incorrect coolant	Replace.
	11. Defective thermostat	Replace.
Engine overcools	1. Defective ECT sensor	Replace.
	2. Extremely cold weather	Put on the radiator cover.
	3. Defective thermostat	Replace.
	4. Defective cooling fan thermo-switch	Replace.
	5. Defective ECM	Replace.

CHASSIS

Complaint	Symptom and possible causes	Remedy
Heavy steering	1. Overtightened steering stem nut 2. Broken bearing in steering stem 3. Distorted steering stem 4. Not enough pressure in tires	Adjust. Replace. Replace. Adjust.
Wobbly handlebars	1. Loss of balance between right and left front forks 2. Distorted front fork 3. Distorted front axle or crooked tire 4. Loose handlebar set bolt or clamp bolt 5. Worn or incorrect tire or wrong tire pressure 6. Worn bearing/race in steering stem	Replace. Repair or replace. Replace. Retighten. Adjust or replace. Replace.
Wobbly front wheel	1. Distorted wheel rim 2. Worn front wheel bearings 3. Defective or incorrect tire 4. Loose axle 5. Incorrect front fork oil level 6. Incorrect front wheel weight balance	Replace. Replace. Replace. Retighten. Adjust. Adjust.
Front suspension too soft	1. Weakened springs 2. Not enough fork oil 3. Wrong weight fork oil	Replace. Replenish. Replace.
Front suspension too stiff	1. Too viscous fork oil 2. Too much fork oil 3. Bent front axle	Replace. Drain excess oil. Replace.
Noisy front suspension	1. Not enough fork oil 2. Loose bolts on suspension	Replenish. Retighten.
Wobbly rear wheel	1. Distorted wheel rim 2. Worn rear wheel bearings 3. Worn final gear box bearing 4. Defective or incorrect tire 5. Worn crankcase bushing 6. Loose axle nut or engine mounting bolts/nuts	Replace. Replace. Replace. Replace. Replace. Retighten.
Rear suspension too soft	1. Weakened shock absorber spring 2. Leakage of oil from shock absorber	Replace. Replace.
Rear suspension too stiff	1. Worn crankcase bushing 2. Bent shock absorber shaft	Replace. Replace.
Noisy rear suspen-sion	1. Loose nuts or bolts on rear suspension 2. Worn crankcase bushing 3. Loose bolts on shock absorber	Retighten. Replace. Retighten.

BRAKES

Complaint	Symptom and possible causes	Remedy
Insufficient brake power	1. Leakage of brake fluid from hydraulic system 2. Worn pads or disc 3. Oil adhesion on friction surface of pads 4. Worn shoes or drum 5. Air in hydraulic system 6. Friction surfaces of pads are dirty with oil or dust 7. Excessively worn master cylinder or piston 8. Not enough brake fluid in the reservoir	Repair or replace. Replace. Clean disc and pads. Replace. Bleed air. Replace. Replace. Replenish.
Brake squeaking	1. Carbon adhesion on pad surface 2. Tilted pad 3. Damaged wheel bearing 4. Loose front-wheel axle or rear-wheel axle 5. Worn pads 6. Foreign material in brake fluid 7. Clogged return port of master cylinder 8. Brake pad surface glazed	Repair surface with sandpaper. Correct pad fitting or replace. Replace. Tighten to specified torque. Replace. Replace brake fluid. Disassemble and clean master cylinder. Repair surface with sandpaper.
Excessive brake lever stroke	1. Air in hydraulic system 2. Insufficient brake fluid 3. Improper quality of brake fluid	Bleed air. Replenish fluid to specified level; bleed air. Replace with correct fluid.
Leakage of brake fluid	1. Insufficient tightening of connection joints 2. Cracked hose or pipe 3. Worn piston or cup	Tighten to specified torque. Replace. Replace piston and/or cup.

ELECTRICAL

Complaint	Symptom and possible causes	Remedy
No sparking or poor sparking	1. Defective ignition coil 2. Defective spark plug 3. Defective CKP sensor 4. Defective ECM 5. Defective TO sensor 6. Open-circuited wiring connections	Replace. Replace. Replace. Replace. Replace. Repair or replace.
Spark plug soon become fouled with carbon.	1. Mixture too rich 2. Idling speed set too high 3. Incorrect gasoline 4. Dirty air cleaner elements 5. Too cold spark plug	Inspect FI system. Inspect ISC valve. Change. Replace. Replace with hot type plug.
Spark plug become fouled too soon.	1. Worn piston rings 2. Worn piston or cylinder 3. Excessive clearance of valve stems in valve guides 4. Worn valve stem oil seal	Replace. Replace. Replace. Replace.
Spark plug electrodes overheat or burn	1. Too hot spark plug 2. Overheated the engine 3. Loose spark plug 4. Too lean mixture	Replace with cold type plugs. Tune up. Retighten. Inspect FI system.
Generator does not charge.	1. Open- or short-circuited lead wires, or loose lead connections 2. Short-circuited, grounded or open generator coil 3. Short-circuited or punctured regulator/rectifier	Repair or replace or retighten. Replace. Replace.
Generator does charge, but charging rate is below the specification.	1. Lead wires tend to get shorted or open-circuited or loosely connected at terminals. 2. Grounded or open-circuited generator coil 3. Defective regulator/rectifier 4. Defective cell plates in the battery	Repair or retighten. Replace. Replace. Replace the battery.
Generator overcharges	1. Internal short-circuit in the battery 2. Damaged or defective regulator/rectifier 3. Poorly grounded regulator/rectifier	Replace the battery. Replace. Clean and tighten ground connection.
Unstable charging	1. Lead wire insulation frayed due to vibration, resulting in intermittent short-circuiting. 2. Internally shorted generator 3. Defective regulator/rectifier	Repair or replace. Replace. Replace.
Starter button is not effective.	1. Run down battery 2. Defective switch contacts 3. Brushes not seating properly on starter motor commutator 4. Defective starter relay or side-stand relay 5. Defective side-stand switch 6. Defective main fuse	Repair or replace. Replace. Repair or replace. Replace. Replace. Replace

BATTERY

Complaint	Symptom and possible causes	Remedy
"Sulfation", acidic white powdery substance or spots on surface of cell plates	1. Cracked battery case 2. Battery has been left in a run-down condition for a long time	Replace the battery. Replace the battery.
Battery runs down quickly	1. Trouble in charging system 2. Cell plates have lost much of their active material as a result of overcharging 3. Internal short-circuit in the battery 4. Too low battery voltage 5. Too old battery	Check the generator, regulator/rectifier and circuit connections and make necessary adjustments to obtain specified charging operation. Replace the battery and correct the charging system. Replace the battery. Recharge the battery fully. Replace the battery.
Battery "sulfation"	1. Incorrect charging rate (When not in use batteries should be checked at least once a month to avoid sulfation.) 2. The battery was left unused in a cold climate for too long.	Replace the battery. Replace the battery if badly sulfated.
Battery discharges too rapidly	1. Dirty container top and sides 2. Current leaks	Clean. Measure the leakage current and replace the defective parts.

WIRING DIAGRAM

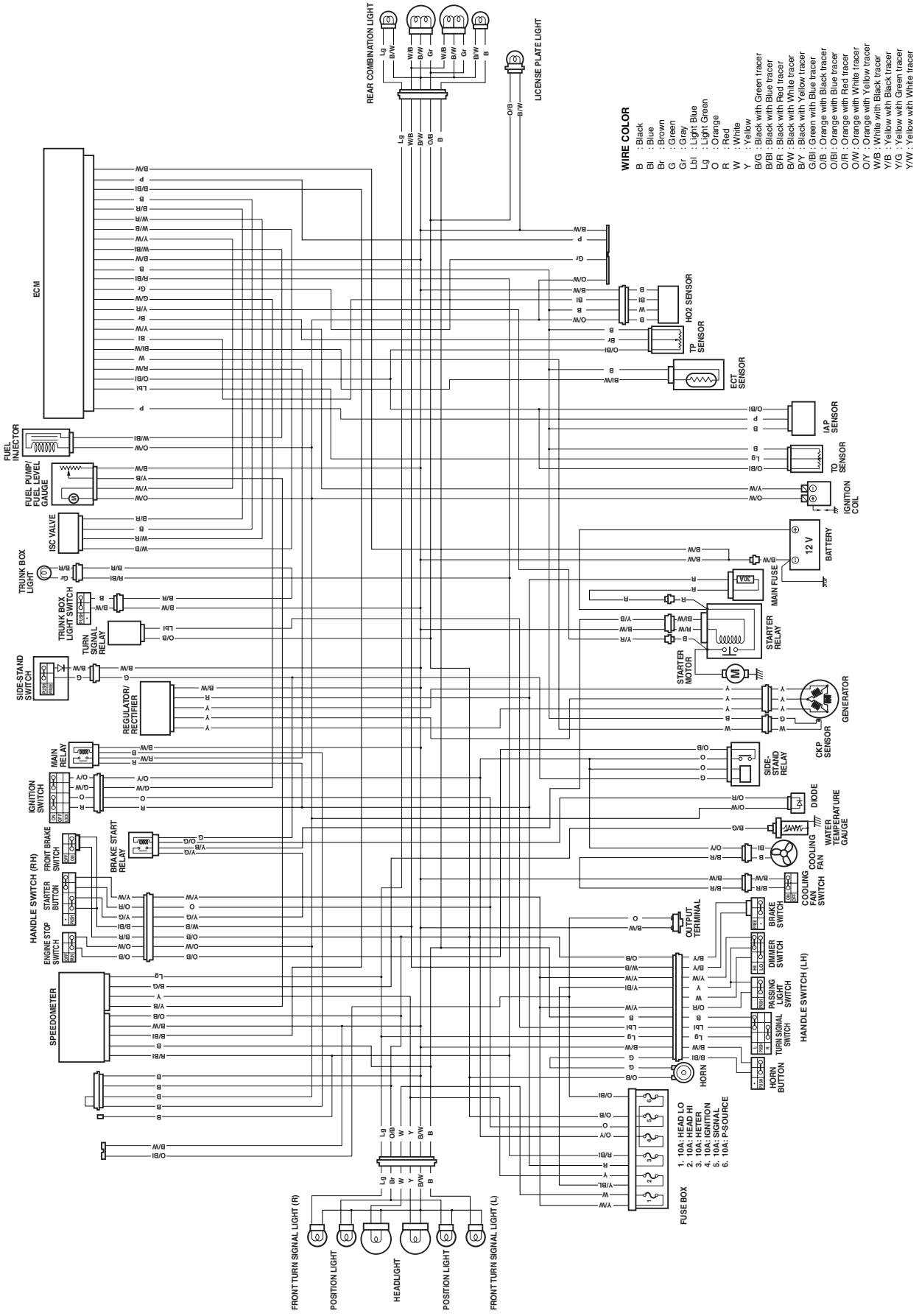

WIRING HARNESS, CABLE AND HOSE ROUTING

WIRING HARNESS ROUTING

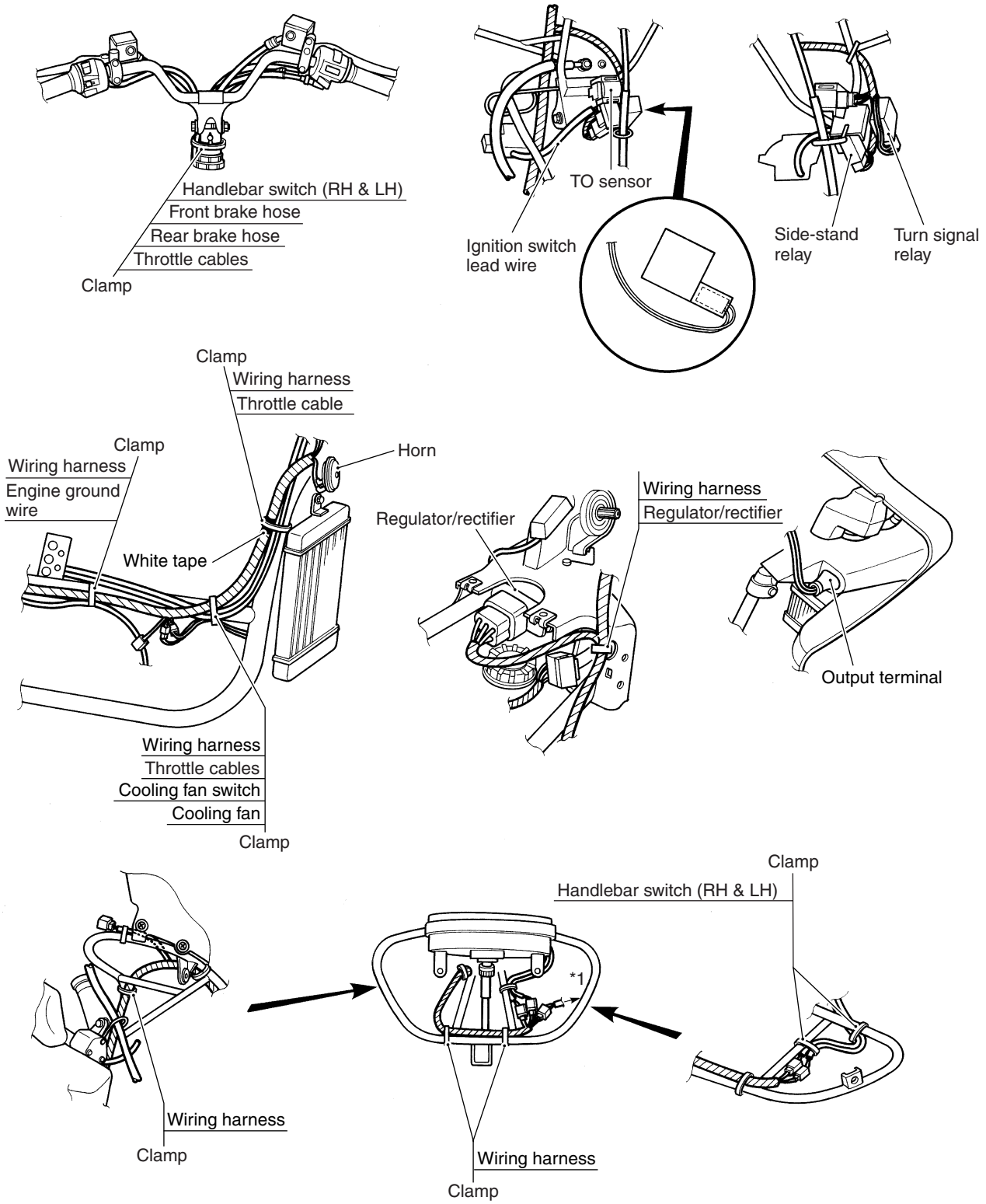

*1	To wiring harness No.2

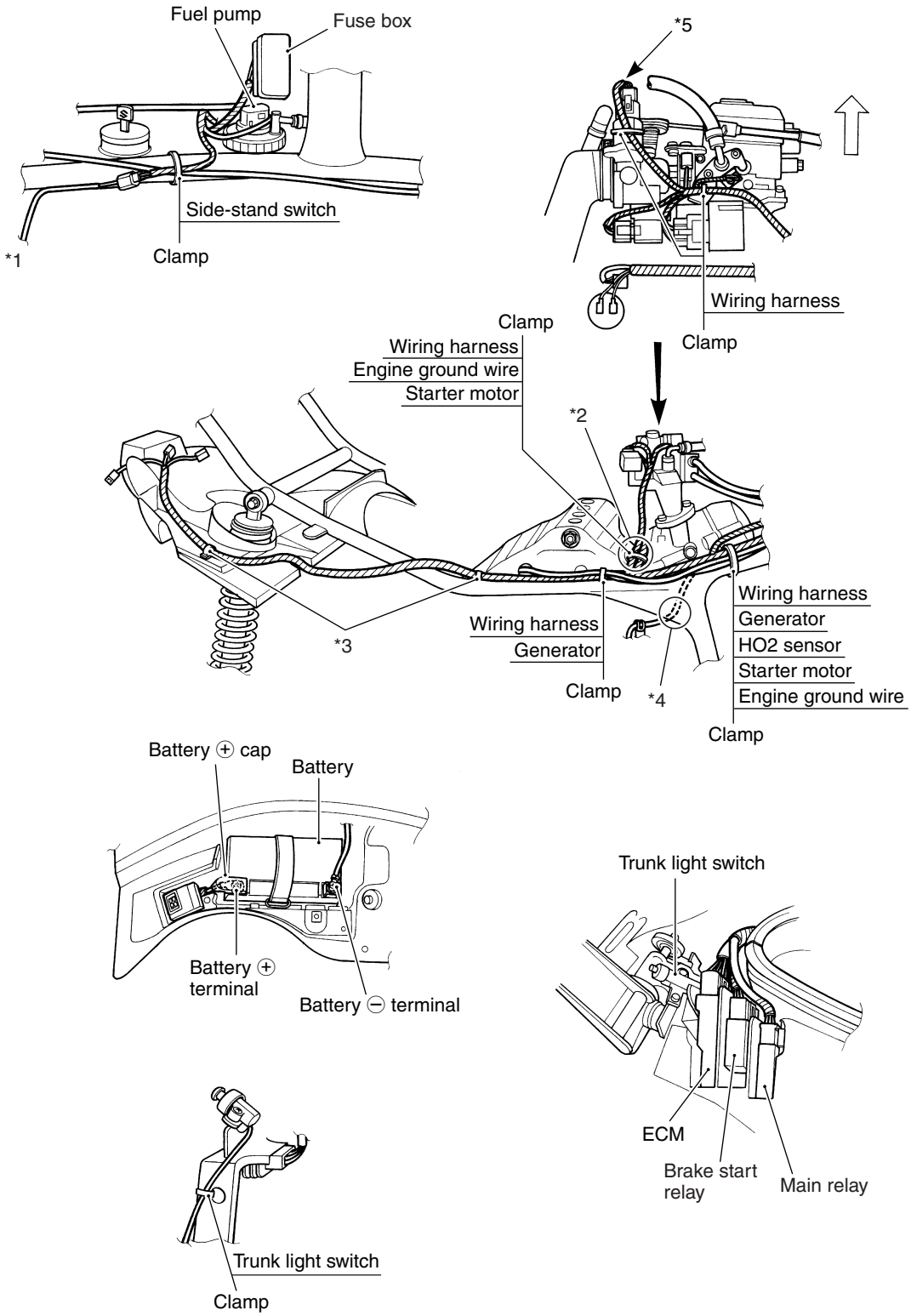

*1	To the side-stand switch	*4	Pass the HO2 sensor lead wire inside of the frame.
*2	Pass the engine ground wire and starter motor lead wire back side of frame.	*5	Make no slack.
*3	Fix the clamp to the frame		

CABLE ROUTING

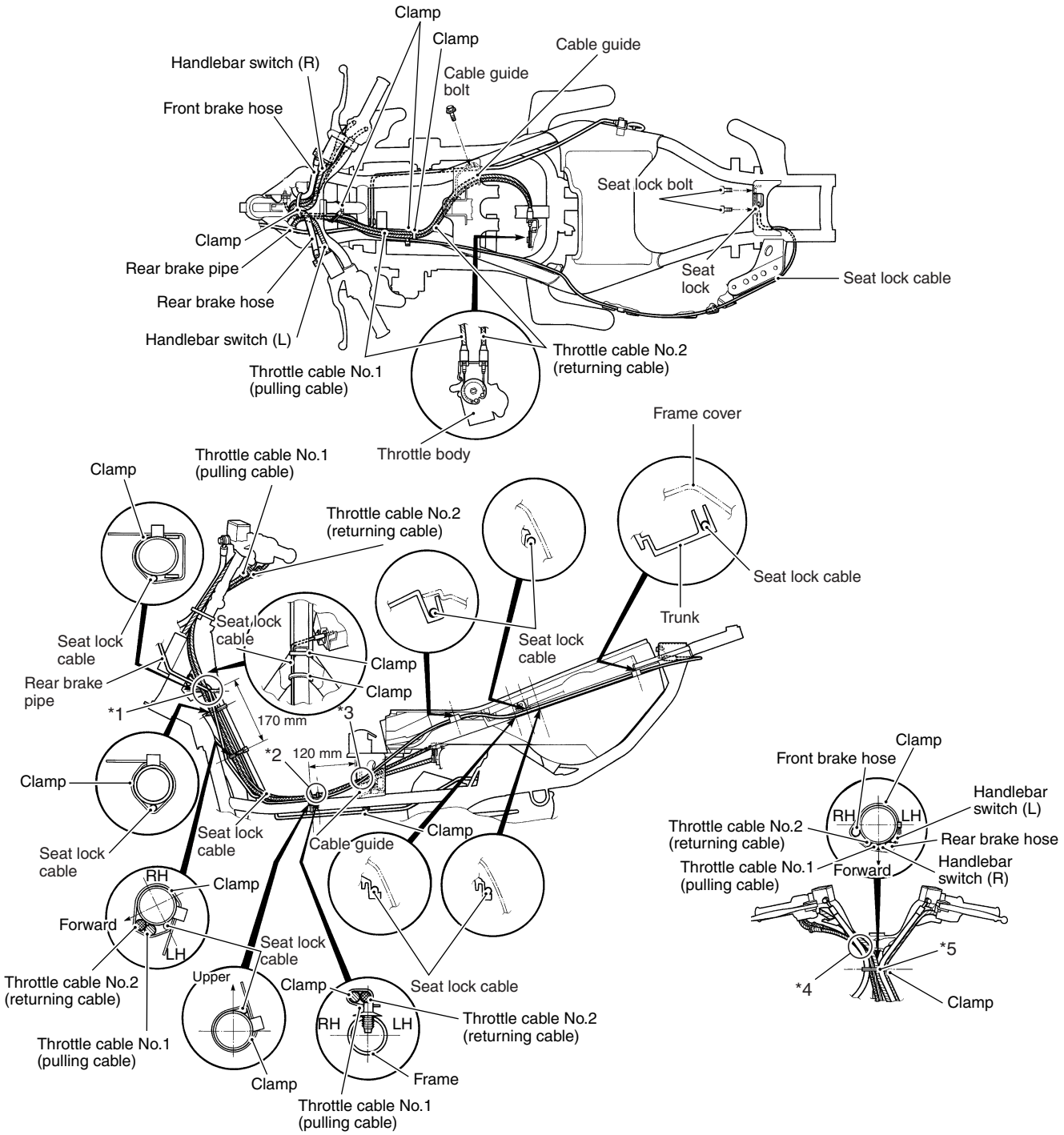

*1	Pass the throttle cables outside of the seat lock cable.	*4	Pass the throttle cable behind the front brake hose.
*2	Fix the throttle cables with the clamp front of white tape on it.	*5	Fix the throttle cables with the clamp on the white tape on it.
*3	Pass through the throttle cables to the cable guide.		

COOLING SYSTEM HOSE ROUTING

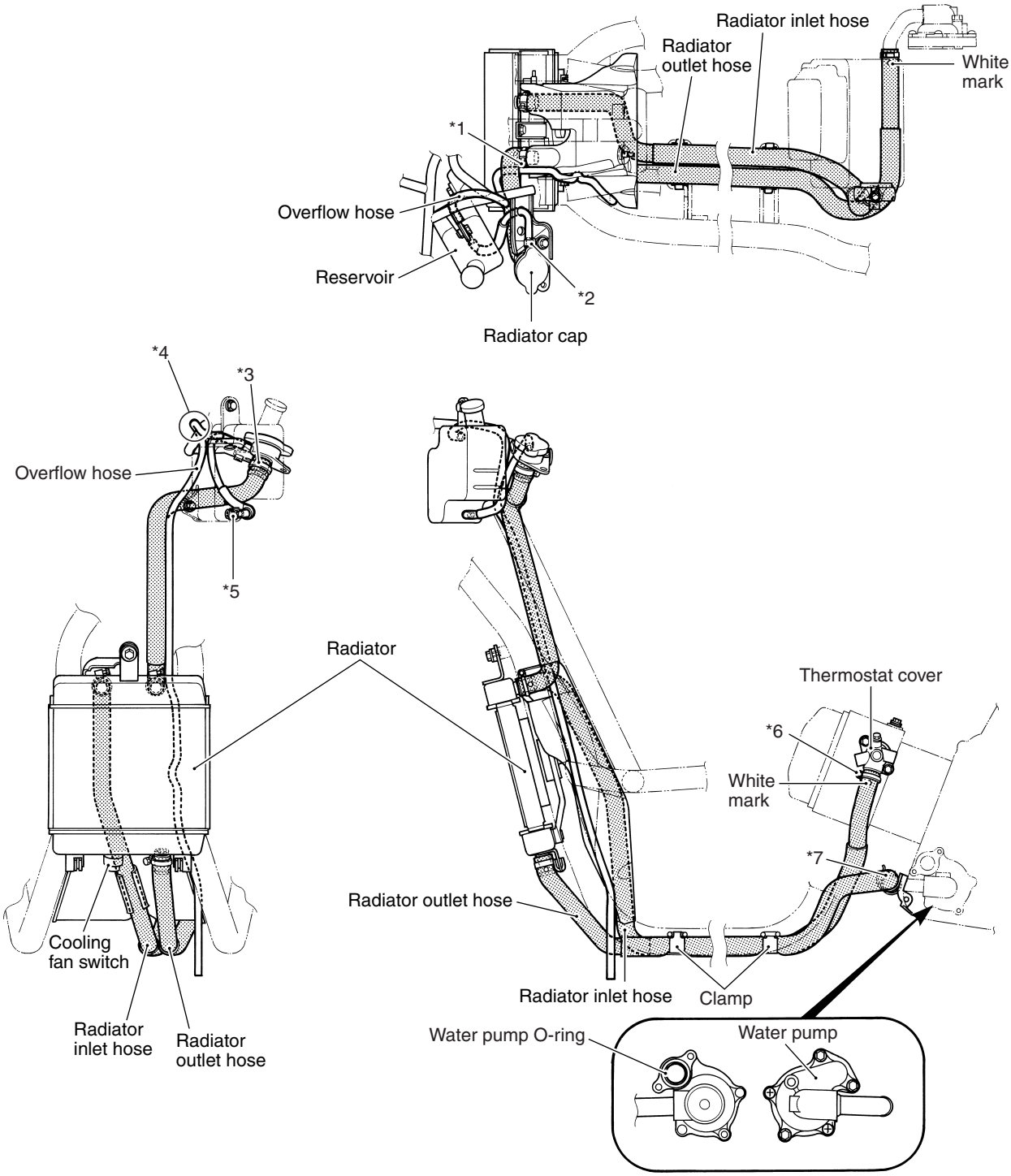

*1	Tighten the clamp screw from the left.	*5	Face the tip of clip to the forward.
*2	Face the tip of clip to the backward.	*6	Tighten the clamp screw from the left.
*3	Tighten the clamp screw from the left.	*7	Tighten the clamp screw from the front.
*4	Pass the overflow hose upper the brace.		

BRAKE HOSE ROUTING

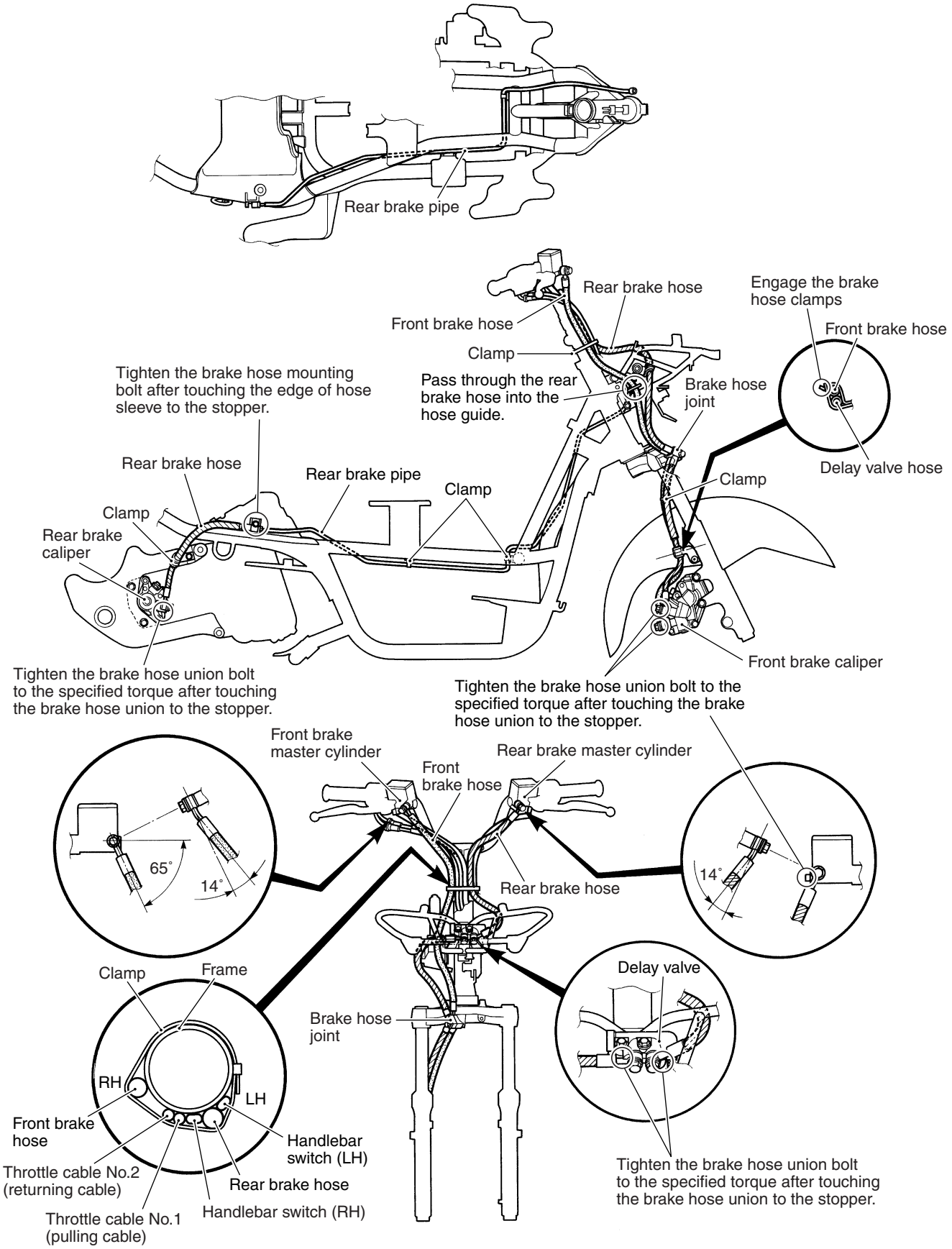

ENGINE ELECTRICAL PARTS HARNESS ROUTING

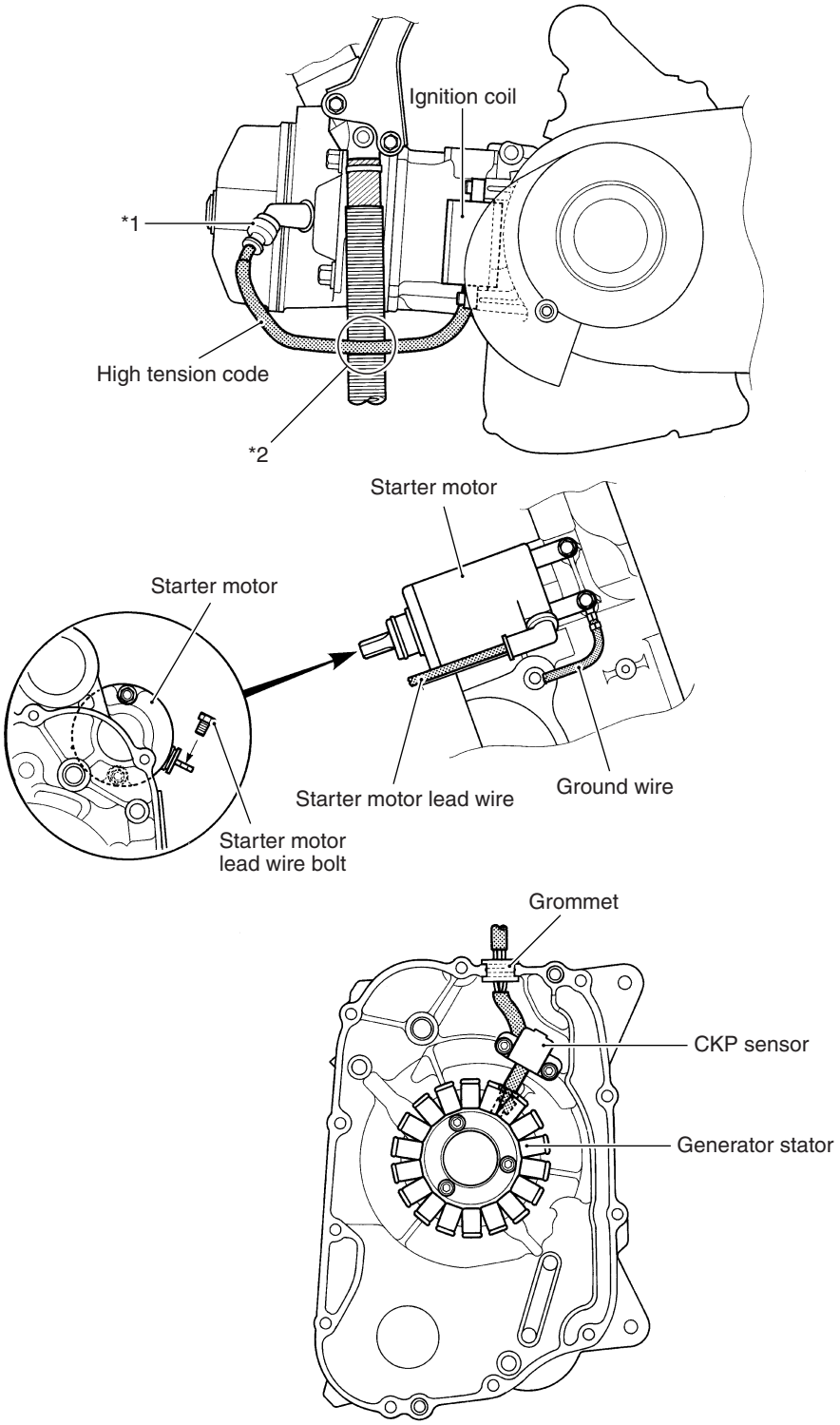

*1	Bring the tip of spark plug cap to downward.	*2	Pass the high tension code to the outside of cooling hose.

HO2 SENSOR HARNESS ROUTING

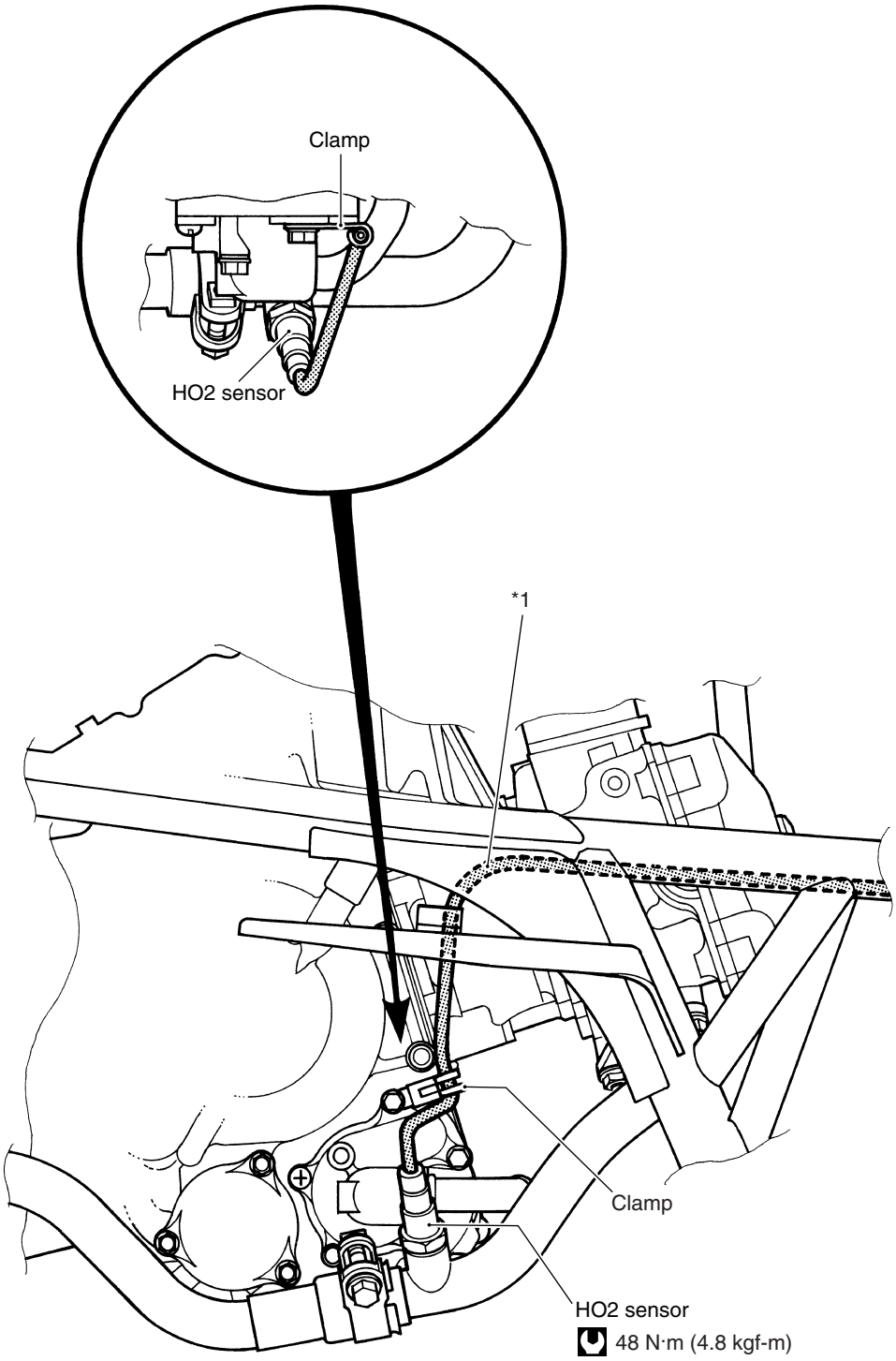

*1	Pass the HO2 sensor lead wire between the frame and engine. Do not protrude the HO2 sensor lead wire from the frame.

SPEEDOMETER CABLE ROUTING

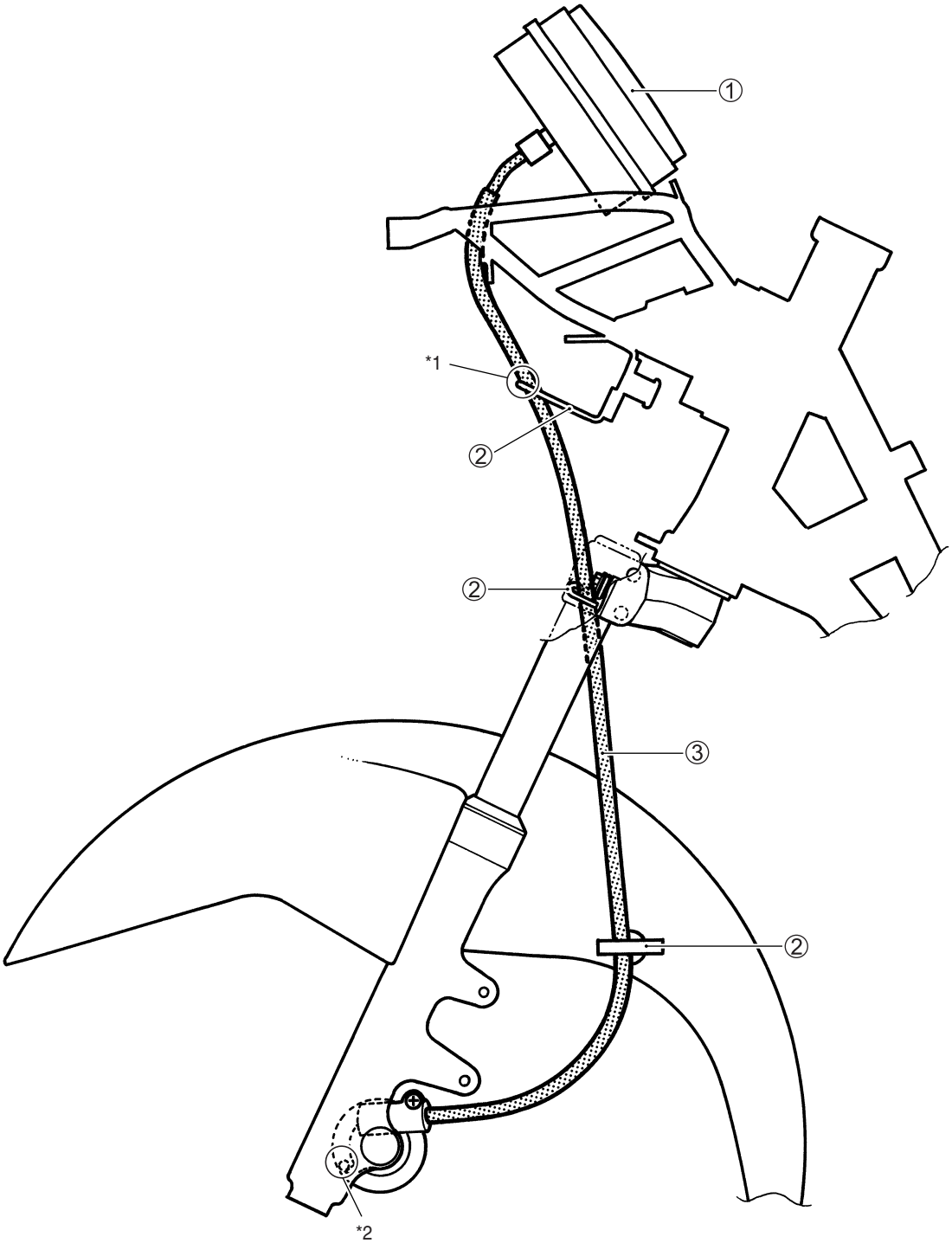

①	Speedometer	*1	Pass through the speedometer cable into the cable guide.
②	Cable guide	*2	Tighten the front axle nut to the specified torque after touching the stopper of speedometer gear box to the stopper of front fork outer tube.
③	Speedometer cable		

THROTTLE BODY HOSE ROUTING

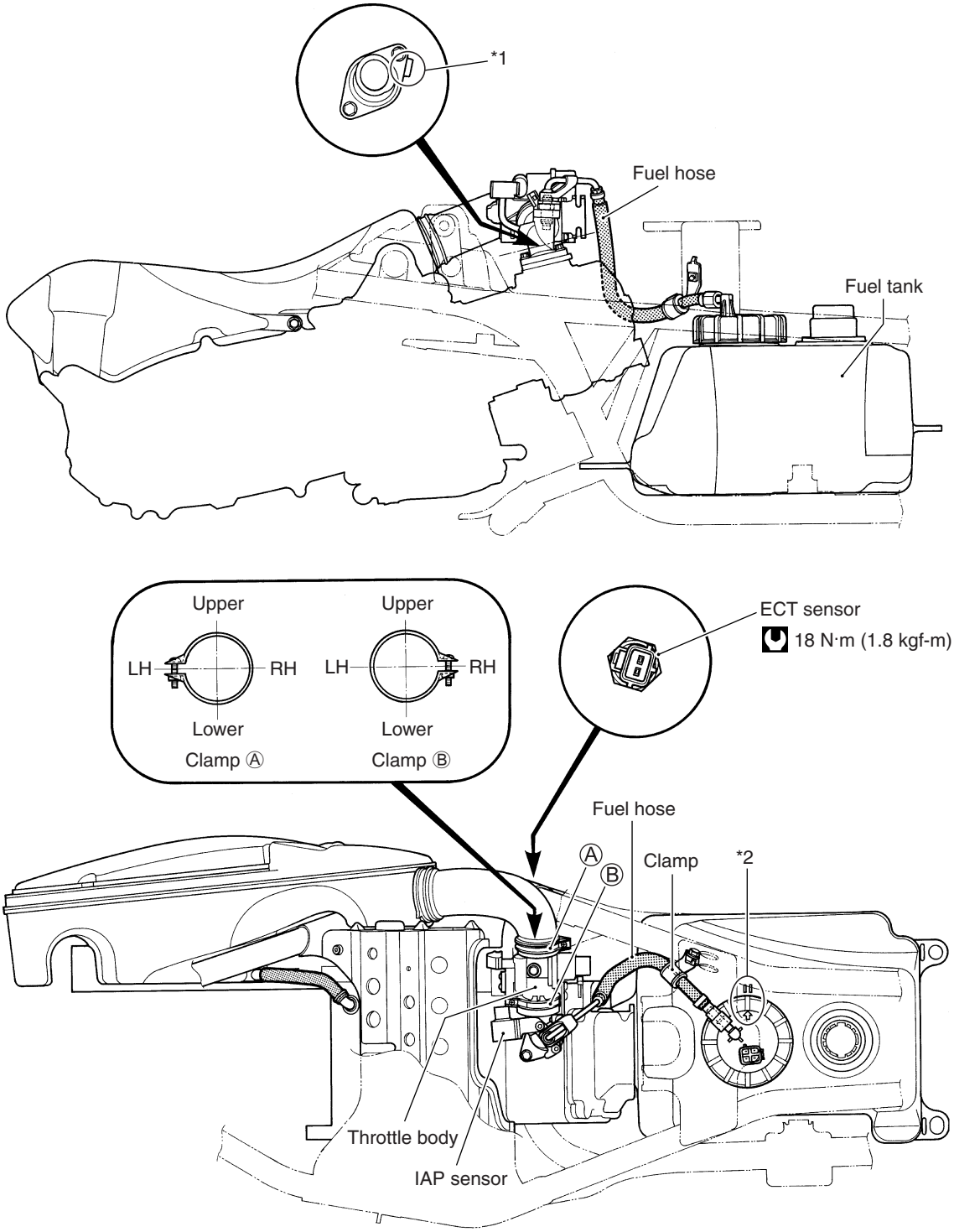

*1	Face the tab of intake pipe insulator to forward, when installing it.	*2	Align the arrow mark on fuel pump with the fuel tank mark.

DRAIN HOSE ROUTING

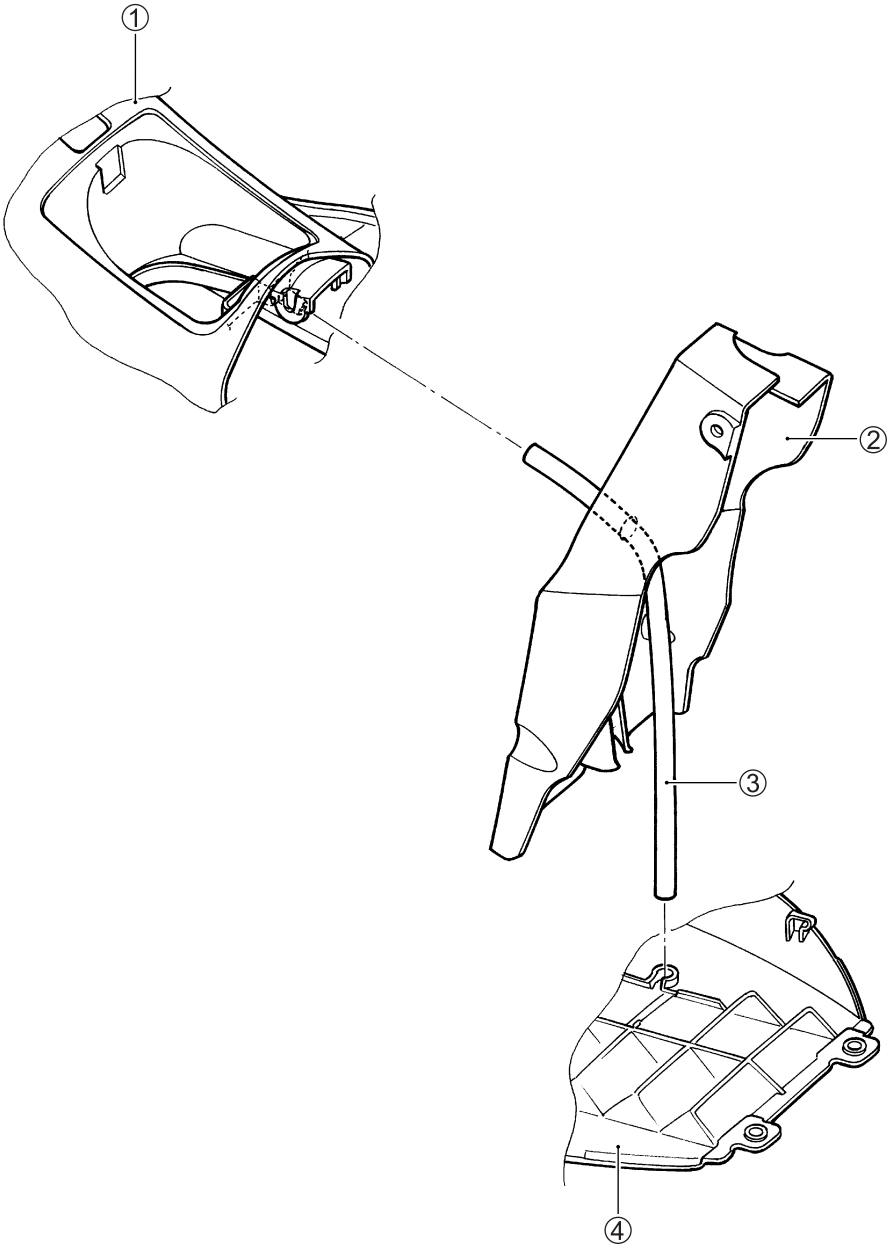

①	Footboard	③	Drain hose
②	Radiator duct	④	Rear lower leg shield

SEAT MOLDING INSTALLATION

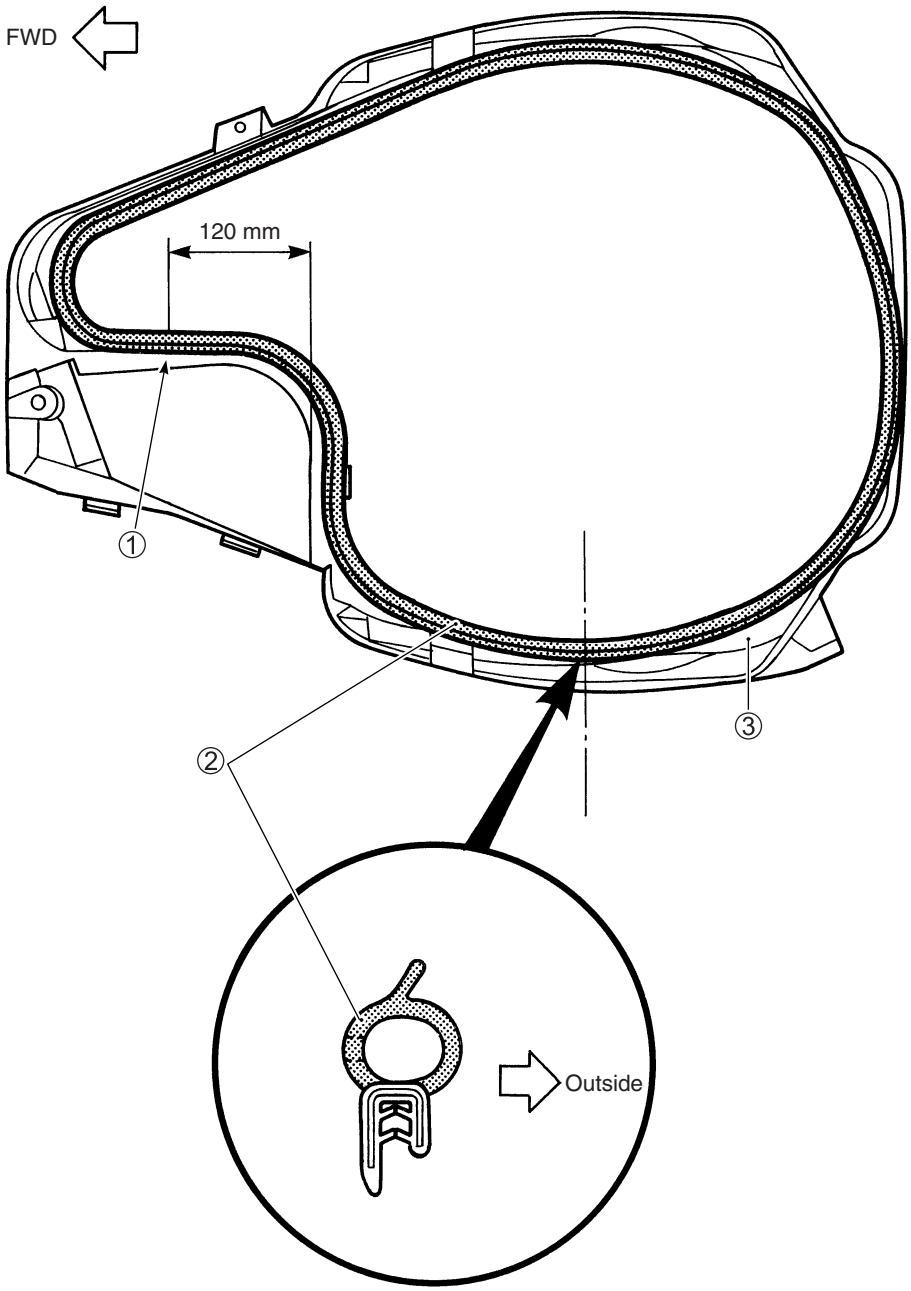

①	End of seat molding	③	Trunk box
②	Seat molding		

EXTERIOR PARTS SET-UP

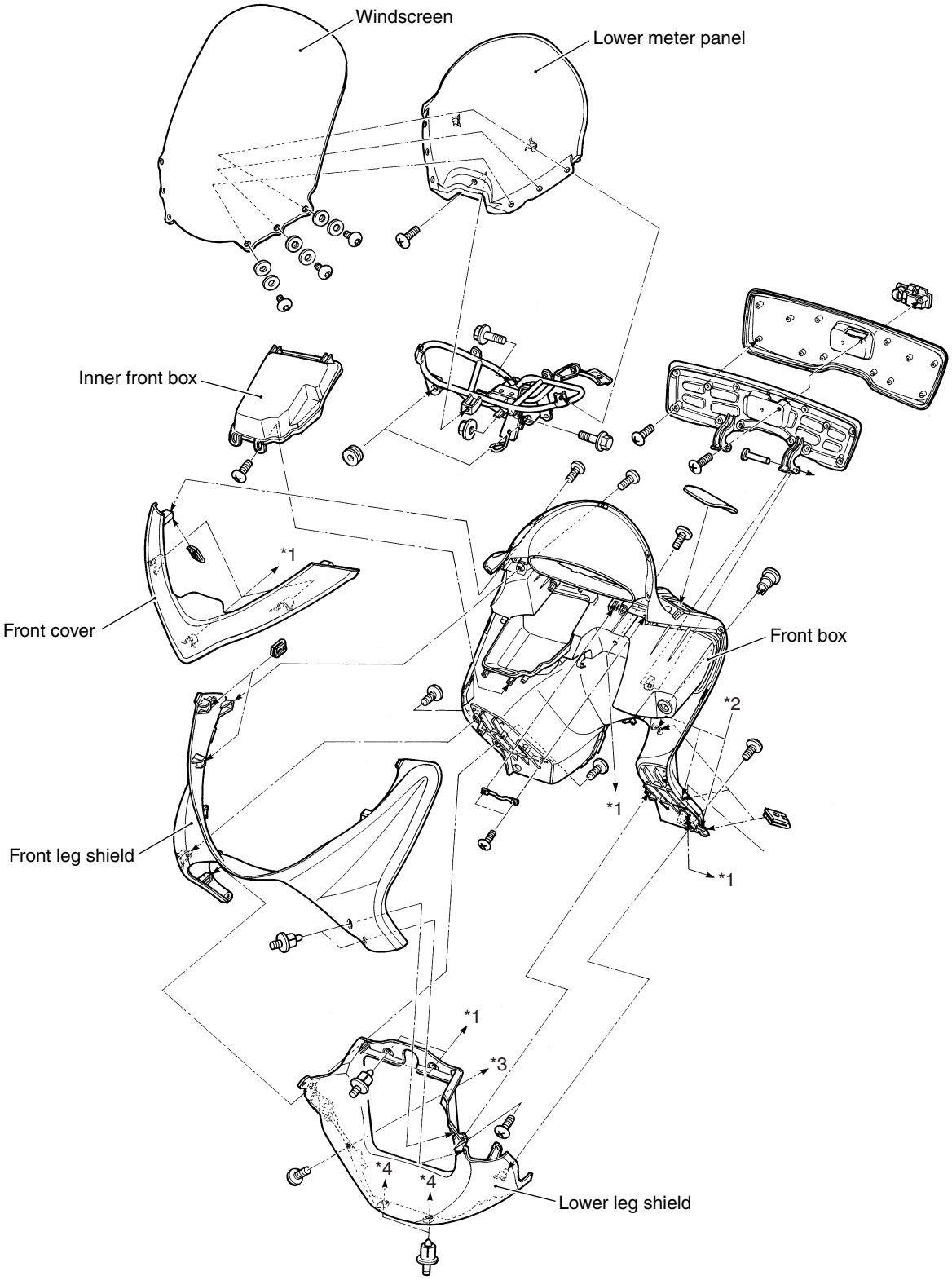

*1	To frame	*3	To side leg shield
*2	From footboard	*4	To rear lower leg shield

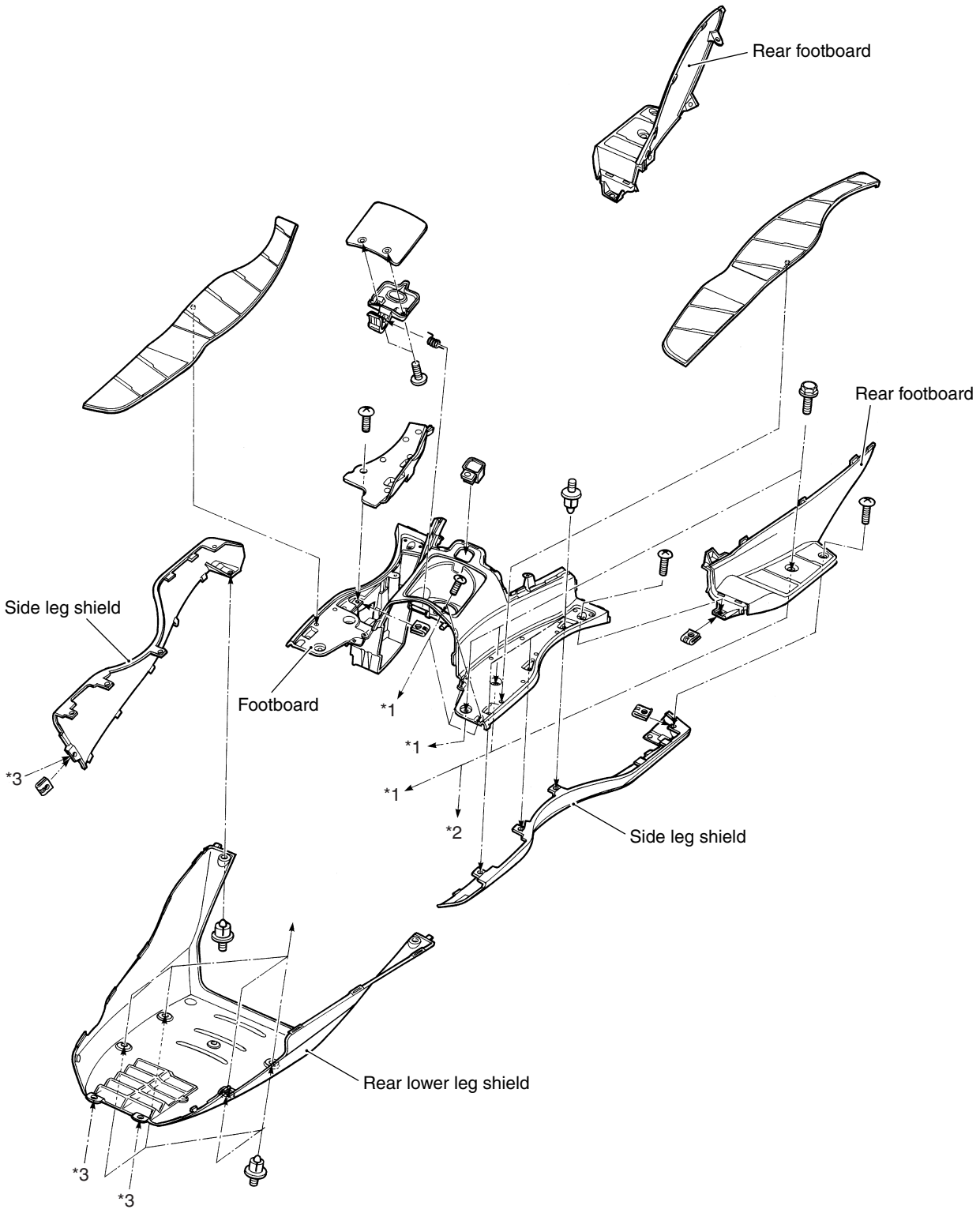

*1	To front box	*3	From lower leg shield
*2	To frame		

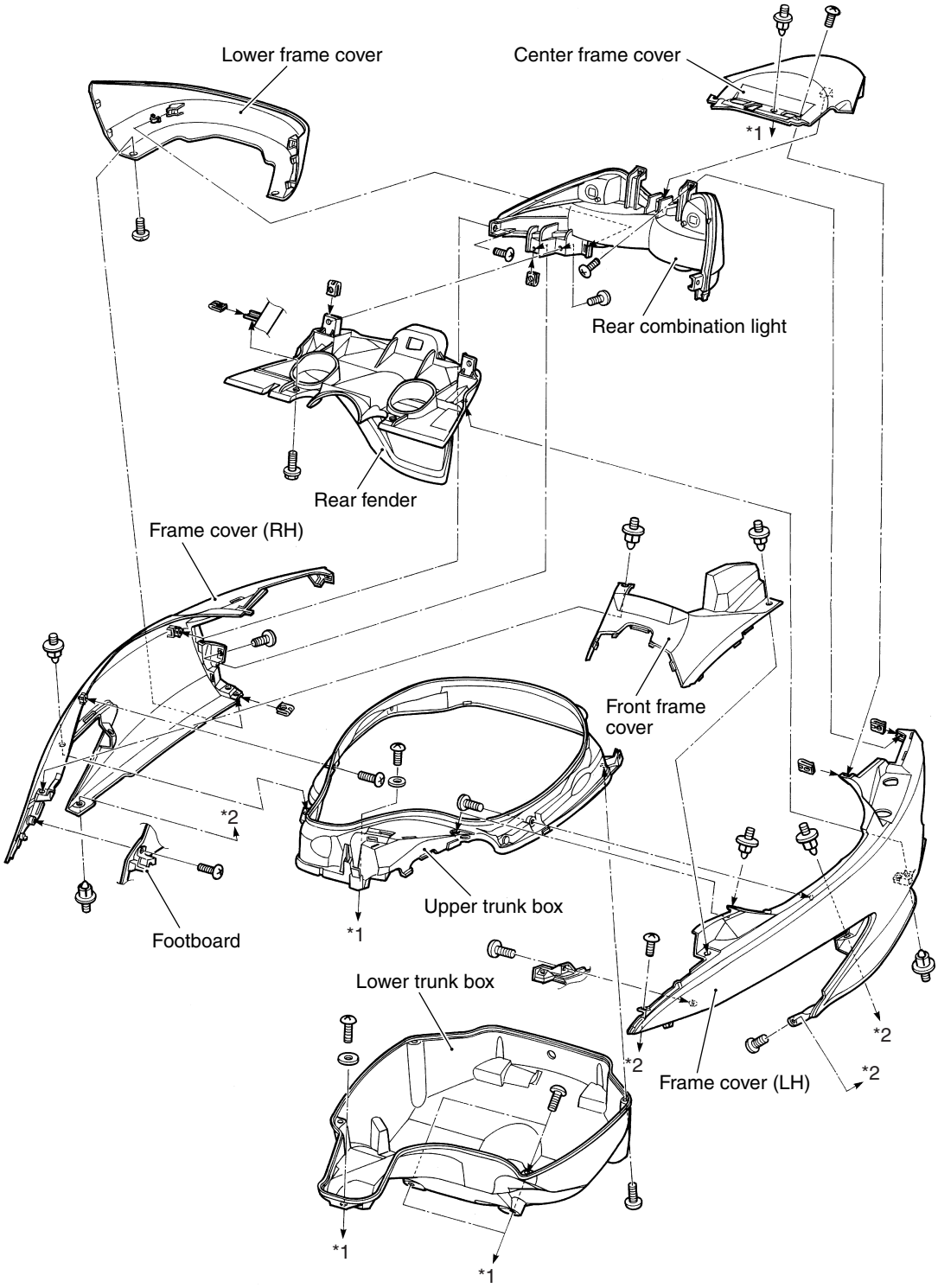

*1	To frame	*2	To footboard

DRIVE BELT COOLING FILTER AND CLUTCH COVER GASKET INSTALLATION

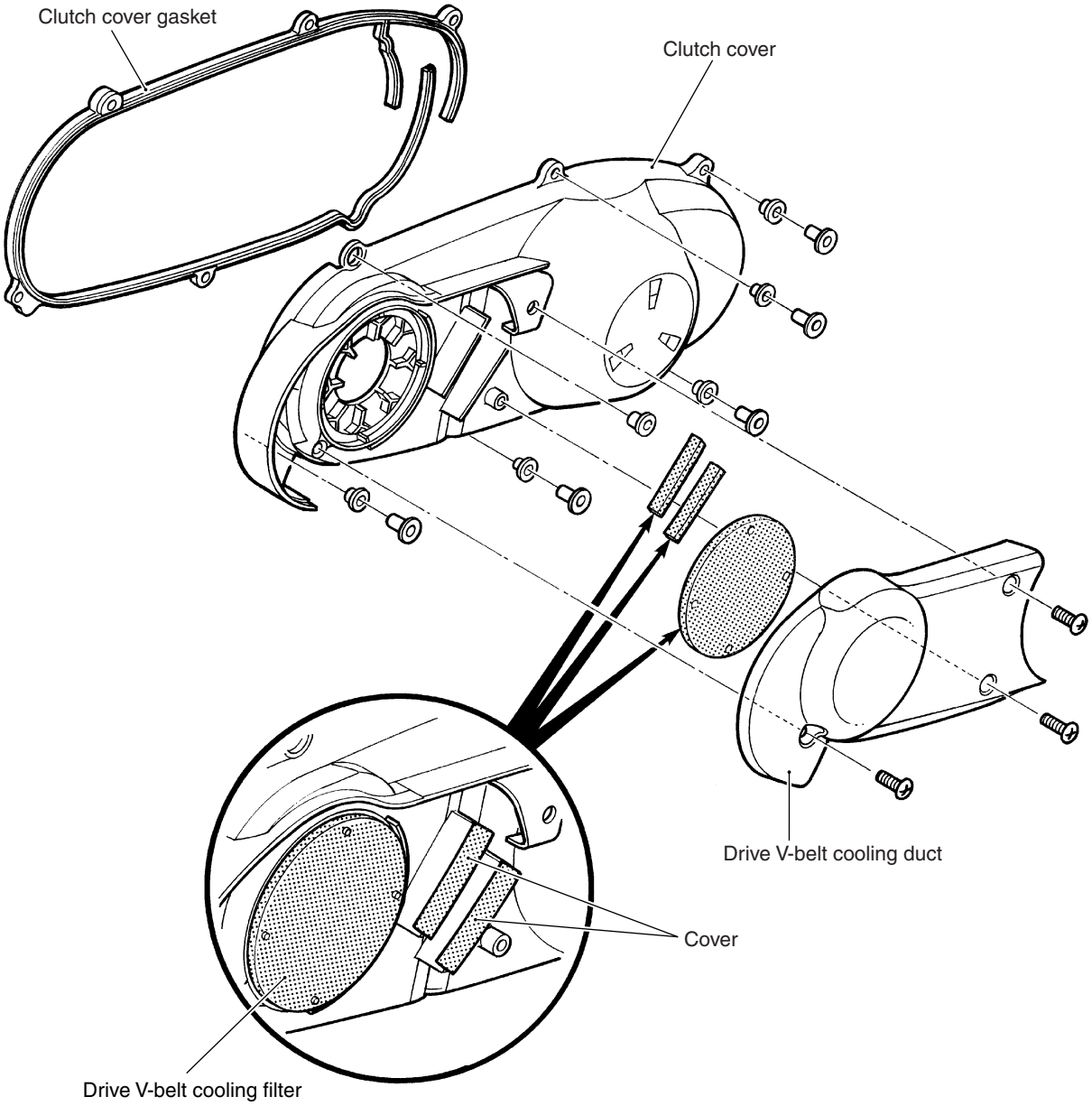

FRONT BOX CUSHION INSTALLATION

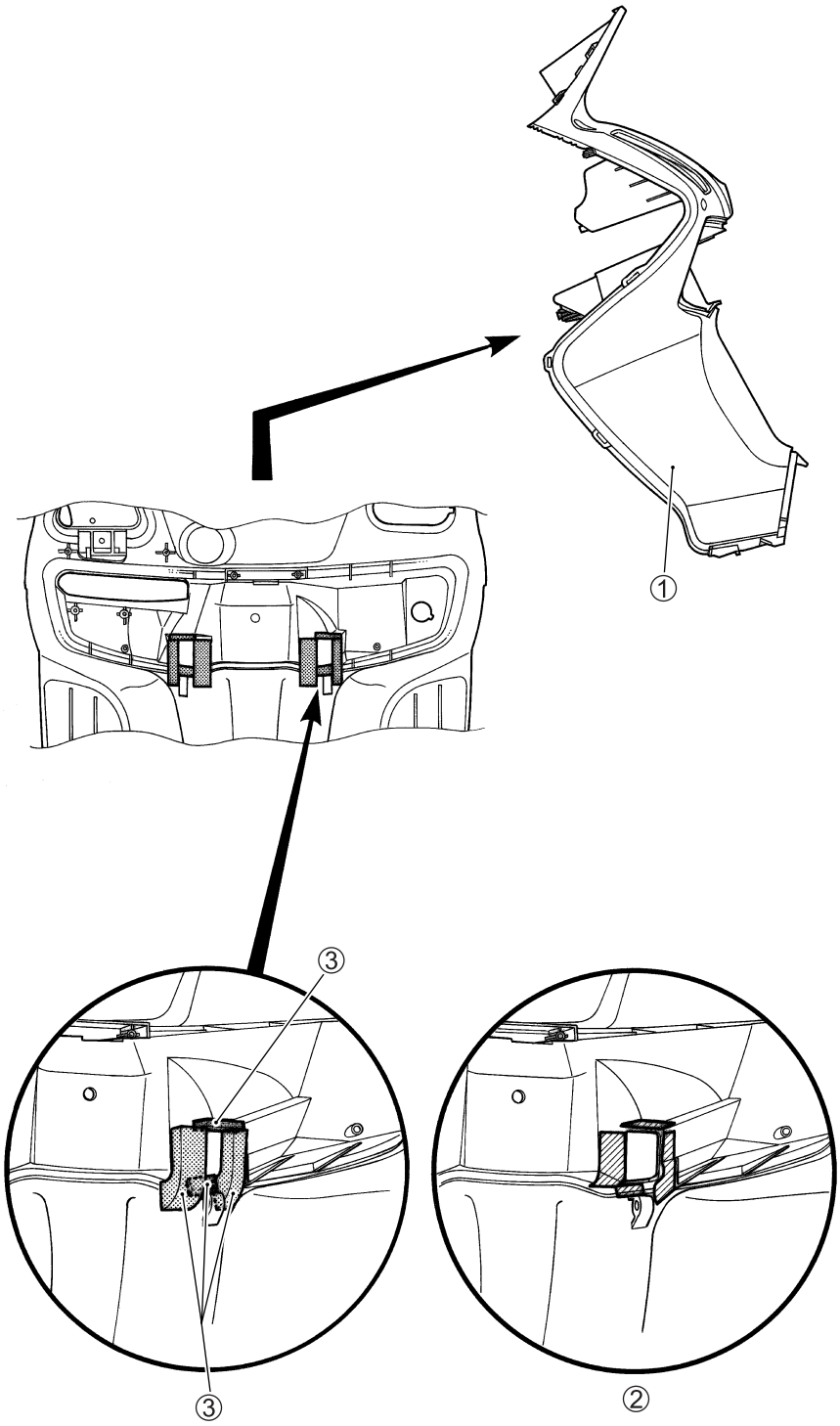

①	Front box	③	Cushion
②	Adhint of cushion		

SIDE-STAND INSTALLATION

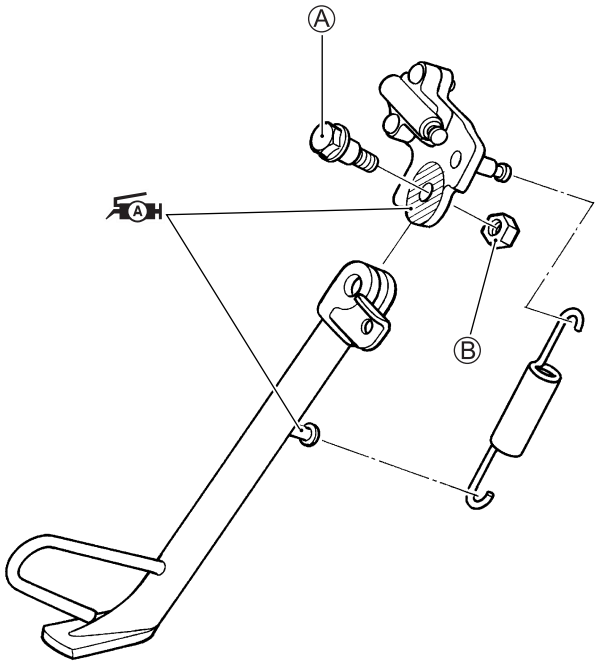

ITEM	N·m	kgf-m
Ⓐ	10	1.0
Ⓑ	40	4.0

CENTER STAND INSTALLATION

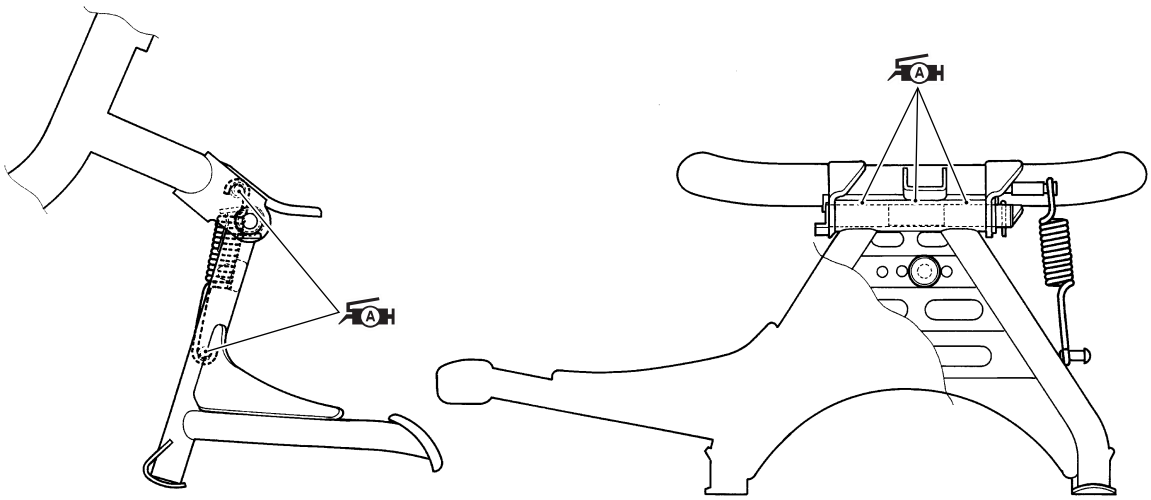

SPECIAL TOOLS

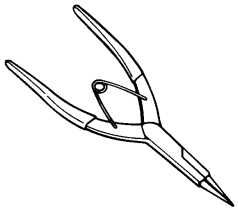 09900-06107 Snap ring pliers	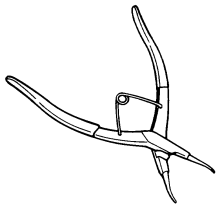 09900-06108 Snap ring pliers	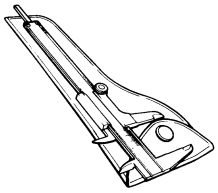 09900-20102 Vernier calipers (1/20 mm, 200 mm)	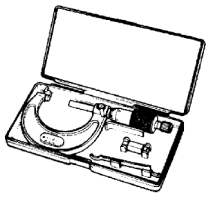 09900-20202 Micrometer (1/100 mm, 25 – 50 mm)	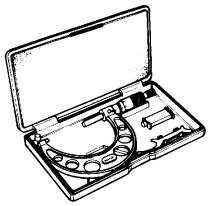 09900-20203 Micrometer (1/100 mm, 50 – 75 mm)
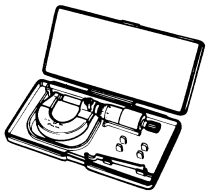 09900-20205 Micrometer (1/1 000 mm, 0 – 25 mm)	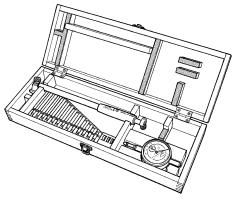 09900-20530 Cylinder gauge set (1/100 mm, 40 – 80 mm)	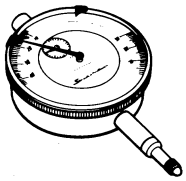 09900-20602 Dial gauge (1/1 000 mm, 1 mm)	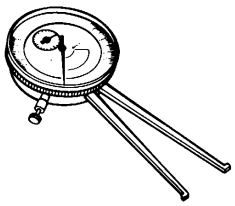 09900-20605 Dial calipers (1/100 mm, 10 – 34 mm)	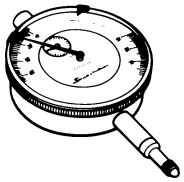 09900-20607 Dial gauge (1/100 mm, 10 mm)
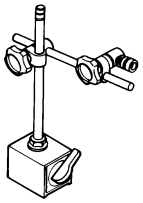 09900-20701 Magnetic stand	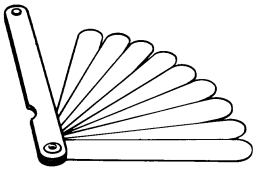 09900-20803 09900-20806 Thickness gauge	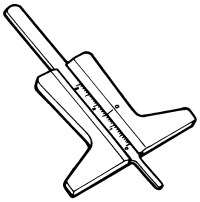 09900-20805 Tire depth gauge	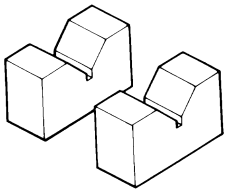 09900-21304 V-block (100 mm)	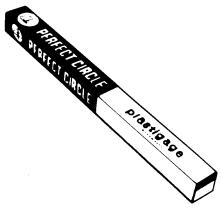 09900-22301 09900-22302 Plastigauge
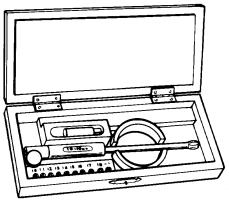 09900-22401 Small bore gauge (10 – 18 mm)	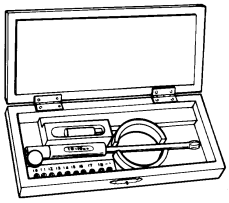 09900-22403 Small bore gauge (18 – 35 mm)	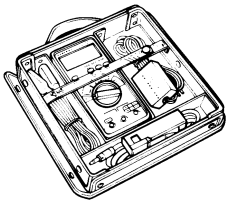 09900-25008 Multi-circuit tester set	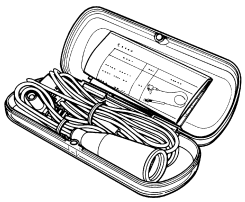 09900-25009 Needle pointed probe set	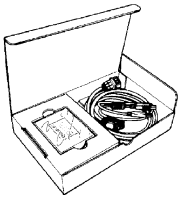 09904-41010 SDS set

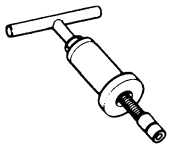 09910-32812 Crankshaft installer	 09910-32840 Crankshaft installer attachment	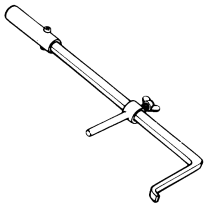 09913-50121 Oil seal remover	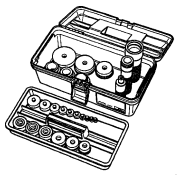 09913-70210 Bearing installer set	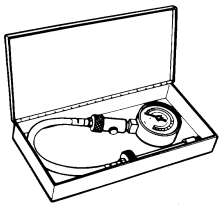 09915-64512 Compression gauge 09915-63311 (Adaptor)
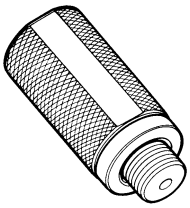 09915-70610 Oil pressure gauge adaptor	 09915-74511 Oil pressure gauge	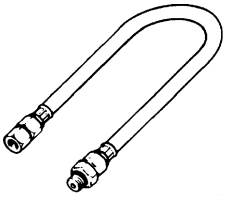 09915-74521 Oil pressure gauge hose	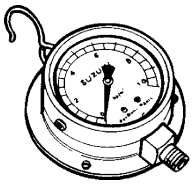 09915-77331 Oil pressure gauge	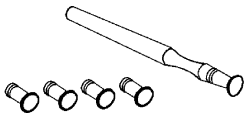 09916-10911 Valve lapper set
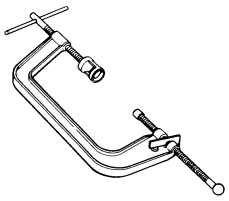 09916-14510 Valve lifter	 09916-14910 Valve lifter attachment	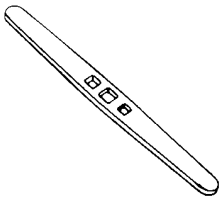 09916-34542 Valve guide reamer handle	 09916-34570 Valve guide reamer (5.0 mm)	 09916-34580 Valve guide reamer (10.8 mm)
 09916-44310 Valve guide remover/installer	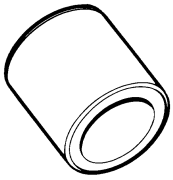 09916-53370 Valve guide installer attachment	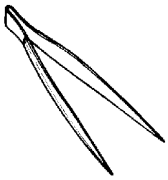 09916-84511 Tweezers	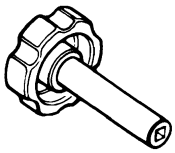 09917-14910 Valve clearance adjusting driver	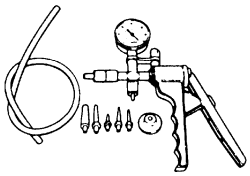 09917-47011 Vacuum pump gauge

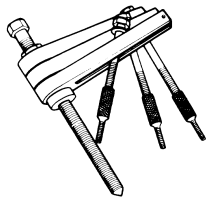 09920-13120 Crankcase/ Crankshaft separator	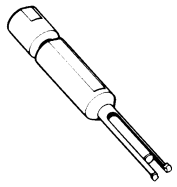 09921-20210 Bearing remover (12 mm)	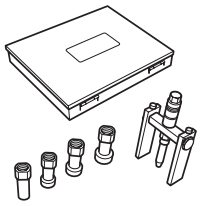 09921-20240 Bearing remover set	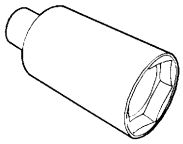 09922-21410 Long socket wrench (46 mm)	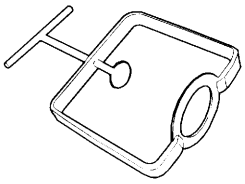 09922-31420 Clutch spring compressor
 09923-73210 Bearing remover	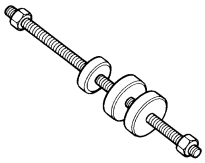 09924-84521 Bearing installer set	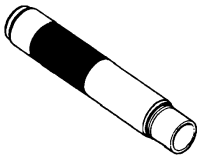 09925-18011 Steering bearing installer	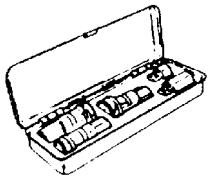 09930-10121 Spark plug socket wrench set	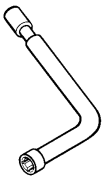 09930-11910 Torx wrench
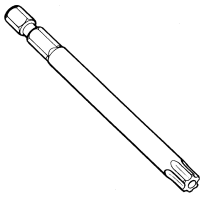 09930-11930 Torx bit JT30H	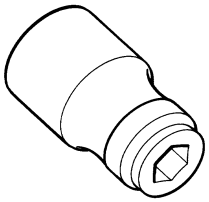 09930-11940 Torx bit holder	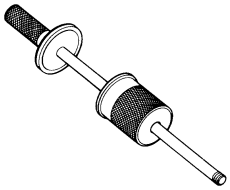 09930-30104 Sliding shaft	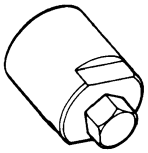 09930-34980 Rotor remover	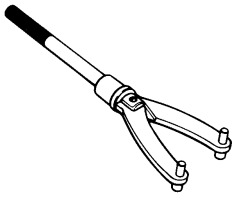 09930-40113 Rotor holder
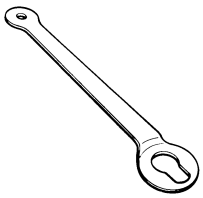 09930-44520 Rotor holder	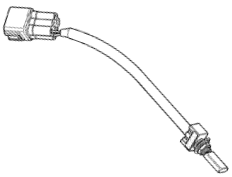 09930-82720 Mode select switch	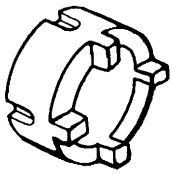 09940-11420 Steering stem nut wrench socket	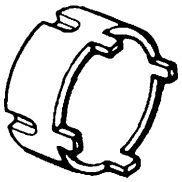 09940-11430 Steering stem nut wrench socket	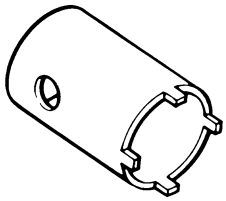 09940-14911 Steering stem nut wrench

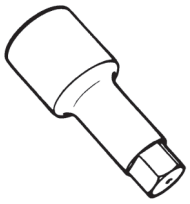 **09940-30230 Hexagon socket (17 mm)**	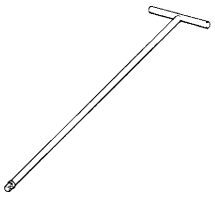 **09940-34520 T-handle**	 **09940-34531 Attachment (A)**	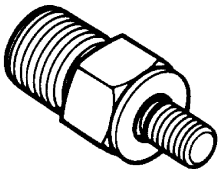 **09940-40211 Fuel pressure gauge adapter**	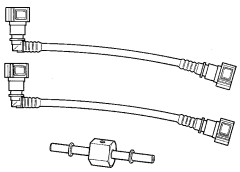 **09940-40220 Fuel pressure gauge hose attachment**
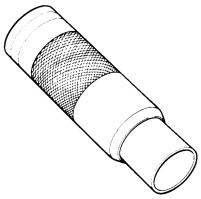 **09940-51410 Steering bearing installer attach-ment**	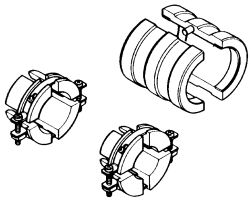 **09940-52861 Front fork oil seal installer set**	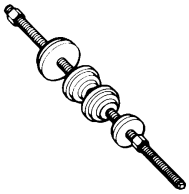 **09941-34513 Steering outer race installer**	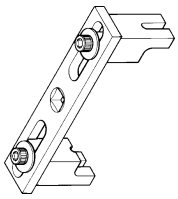 **09941-51012 Ring lock nut wrench**	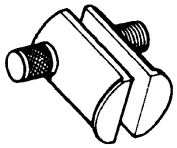 **09941-54911 Bearing outer race remover**
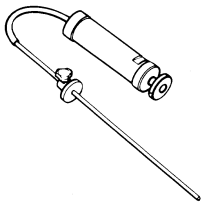 **09943-74111 Fork oil level gauge**	 **09941-74911 Steering bearing installer**	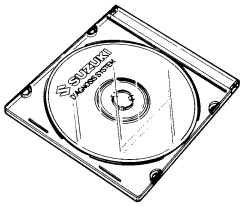 **99565-01010-009 CD-ROM ver.9**		

NOTE:
Before placing order for the special tool, please check for availability.

TIGHTENING TORQUE

ENGINE

ITEM		N·m	kgf-m
Cylinder head cover bolt	Initial	10	1.0
	Final	14	1.4
Camshaft journal holder bolt		10	1.0
Cylinder head bolt	Initial	25	2.5
	Final	42	4.2
Cylinder head nut	6 mm	10	1.0
Cylinder nut	6 mm	10	1.0
Rocker arm adjuster lock-nut		10	1.0
Exhaust pipe nut		23	2.3
Muffler mounting bolt		23	2.3
Starter clutch bolt		10	1.0
Crankshaft nut		147	14.7
Cam chain tensioner bolt		13	1.3
Cam chain tension adjuster mounting bolt		10	1.0
Cam chain tension adjuster bolt		8	0.8
Cam chain sprocket bolt		15	1.5
Spark plug		11	1.1
Crankcase bolt	6 mm	11	1.1
	8 mm	22	2.2
TDC plug		23	2.3
Engine oil gallery bolt	12 mm	21	2.1
	14 mm	23	2.3
Engine oil drain plug		23	2.3
Final gear oil drain plug		12	1.2
Final gear oil level plug		12	1.2
Final gear box cover bolt		22	2.2
Clutch cover bolt		8	0.8
Cooling fan thermo-switch		12	1.2
ECT sensor		18	1.8
Thermostat cover bolt		10	1.0
Thermostat cover air bleeder bolt		5.5	0.55
Radiator hose clamp screw		2	0.2
Generator rotor nut		95	9.5
Generator stator bolt		5	0.5
Pick-up coil bolt		5	0.5
Starter motor mounting bolt		6	0.6
Starter motor lead wire screw		3	0.3
Ignition coil mounting bolt		5	0.5
HO2 sensor		48	4.8
Crankcase bracket mounting bolt/nut		100	10.0
Engine mounting bolt/nut		85	8.5

FI SYSTEM AND INTAKE AIR SYSTEM

ITEM	N·m	kgf-m
CKP sensor bolt	5	0.5
HO2 sensor	48	4.8
Fuel pump retainer	35	3.5
TP sensor mounting screw	1.8	0.18

COOLING SYSTEM

ITEM	N·m	kgf-m
Cooling fan thermo-switch	12	1.2
Engine coolant temperature gauge	13	1.3
Water pump mounting bolt	10	1.0
Cooling fan mounting bolt	8.4	0.84
ECT sensor	18	1.8
Thermostat case bolt	10	1.0
Engine coolant temperature gauge	13	1.3
Radiator hose clamp screw	2	0.2

CHASSIS

ITEM		N·m	kgf-m
Handlebar set bolt		25	2.5
Handlebar clamp bolt/nut		50	5.0
Front fork lower bracket bolt		23	2.3
Steering stem nut		30	3.0
Front axle nut		44	4.4
Brake disc bolt (Front and Rear)		23	2.3
Brake caliper air bleeder valve (Front and Rear)		6	0.6
Brake caliper mounting bolt (Front and Rear)		26	2.6
Brake pad bolt (Front and Rear)		18	1.8
Brake hose union bolt (Front and Rear)		23	2.3
Brake pipe nut		16	1.6
Brake master cylinder bolt (Front and Rear)	Upper	12	1.2
	Lower	10	1.0
Rear shock absorber bolt/nut (Upper and Lower)		29	2.9
Rear axle nut		120	12.0
Side-stand mounting bolt		10	1.0
Side-stand mounting nut		40	4.0
Brake lever pivot bolt/nut		6	0.6

TIGHTENING TORQUE CHART

For other bolts and nuts listed previously, refer to this chart:

Bolt diameter Ⓐ (mm)	Conventional or “4” marked bolt		“7” marked bolt	
	N·m	kgf-m	N·m	kgf-m
4	1.5	0.15	2.3	0.23
5	3	0.3	4.5	0.45
6	5.5	0.55	10	1.0
8	13	1.3	23	2.3
10	29	2.9	50	5.0
12	45	4.5	85	8.5
14	65	6.5	135	13.5
16	105	10.5	210	21.0
18	160	16.0	240	24.0

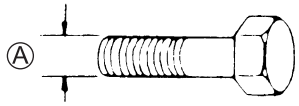

Conventional bolt

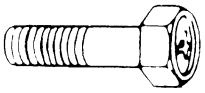

“4” marked bolt

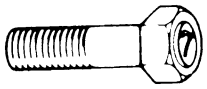

“7” marked bolt

SERVICE DATA

VALVE + VALVE GUIDE

Unit: mm

ITEM	STANDARD		LIMIT
Valve diam.	IN.	22.0	—
	EX.	19.0	—
Valve clearance (when cold)	IN.	0.05 – 0.10	—
	EX.	0.17 – 0.22	—
Valve guide to valve stem clearance	IN.	0.010 – 0.037	—
	EX.	0.030 – 0.057	—
Valve guide I.D.	IN. & EX.	5.000 – 5.012	—
Valve stem O.D.	IN.	4.975 – 4.990	—
	EX.	4.955 – 4.970	—
Valve stem deflection	IN. & EX.	—	0.35
Valve stem runout	IN. & EX.	—	0.05
Valve head thickness	IN. & EX.	—	0.5
Valve stem end length	IN. & EX.	—	1.8
Valve seat width	IN. & EX.	0.9 – 1.1	—
Valve head radial runout	IN. & EX.	—	0.03
Valve spring free length	IN. & EX.	—	38.8
Valve spring tension	IN. & EX.	182 – 210 N (18.6 – 21.4 kgf) at length 31.5 mm	—

CAMSHAFT + CYLINDER HEAD

Unit: mm

ITEM	STANDARD		LIMIT
Cam height	IN.	32.720 – 32.770	32.420
	EX.	32.460 – 32.510	32.160
Camshaft journal oil clearance	ϕ22	0.032 – 0.066	0.150
	ϕ17.5	0.028 – 0.059	0.150
Camshaft journal holder I.D.	ϕ22	22.012 – 22.025	—
	ϕ17.5	17.512 – 17.525	—
Camshaft journal O.D.	ϕ22	21.959 – 21.980	—
	ϕ17.5	17.466 – 17.484	—
Camshaft runout	IN. & EX.	—	0.10
Rocker arm I.D.	IN. & EX.	12.000 – 12.018	—
Rocker arm shaft O.D.	IN. & EX.	11.973 – 11.984	—
Cylinder head distortion	—		0.05

CYLINDER + PISTON + PISTON RING

Unit: mm

ITEM	STANDARD			LIMIT
Compression pressure	1 650 kPa (16.5 kgf/cm²)			1 500 kPa (15.0 kgf/cm²)
Piston to cylinder clearance	0.020 – 0.030			0.120
Cylinder bore	57.000 – 57.015			No nicks or scratches
Piston diameter	56.975 – 56.990 Measure at 15 mm from the skirt end.			56.880
Cylinder distortion	—			0.05
Piston ring free end gap	1st	IR	Approx. 7.0	5.6
	2nd	R	Approx. 6.1	4.9
Piston ring end gap	1st		0.06 – 0.19	0.50
	2nd		0.06 – 0.18	0.50
Piston ring to groove clearance	1st		—	0.180
	2nd		—	0.150
Piston ring groove width	1st		1.01 – 1.03	—
	2nd		0.81 – 0.83	—
	Oil		1.51 – 1.53	—
Piston ring thickness	1st		0.97 – 0.99	—
	2nd		0.77 – 0.79	—
Piston pin bore	16.002 – 16.008			16.030
Piston pin O.D.	15.995 – 16.000			15.980

CONROD + CRANKSHAFT

Unit: mm

ITEM	STANDARD	LIMIT
Conrod small end I.D.	16.006 – 16.014	16.040
Conrod deflection	—	3.0
Conrod big end side clearance	0.10 – 0.45	1.0
Conrod big end width	16.95 – 17.00	—
Width between crankshaft webs	63.9 – 64.1	—
Crankshaft runout	—	0.10

OIL PUMP

ITEM	STANDARD	LIMIT
Oil pressure (at 60 °C)	Above 170 kPa (1.7 kgf/cm²) Below 230 kPa (2.3 kgf/cm²) at 3 000 r/min	—

CLUTCH

Unit: mm

ITEM	STANDARD	LIMIT
Clutch housing I.D.	125.0 – 125.2	125.5
Clutch shoe thickness	3.0	2.0
Clutch engage r/min	3 800 ± 300 r/min	—
Clutch lock-up r/min	6 000 ± 500 r/min	—

TRANSMISSION

Unit: mm Except ratio

ITEM	SPECIFICATION	NOTE
Reduction ratio	Variable change (2.829 – 0.744)	—
Final reduction ratio	9.166 (44/16 × 50/15)	—
Drive V-belt width	22.4	21.4
Movable driven face spring free length	130.0	123.5

INJECTOR + FUEL PUMP + FUEL PRESSURE REGULATOR

ITEM	SPECIFICATION	NOTE
Injector resistance	Approx. 12 Ω at 21 °C	—
Fuel pump discharge amount	40 ml and more For 10 sec., 300 kPa (3.0 kgf/cm²)	—
Fuel pressure regulator operating set pressure	Approx. 250 kPa (2.5 kgf/cm²)	—

FI SENSORS

ITEM	SPECIFICATION		NOTE
CKP sensor resistance	158 – 238 Ω		
CKP sensor peak voltage	2.0 V and more (When cranking)		⊕ probe: W, ⊖ probe: G
IAP sensor input voltage	4.5 – 5.5 V		
IAP sensor output voltage	2.66 – 3.68 V (70 – 101 kPa, 15 – 35 °C)		
TP sensor input voltage	4.5 – 5.5 V		
TP sensor output voltage	Closed	Approx. 0.65 V	
	Opened	Approx. 3.96 V	
ECT sensor input voltage	4.5 – 5.5 V		
ECT sensor resistance	Approx. 2.45 kΩ at 20 °C		
TO sensor resistance	16.5 – 22.3 kΩ		
TO sensor output voltage	Normal	0.4 – 1.4 V	
	Leaning	3.7 – 4.4 V	
Injector voltage	Battery voltage		
Ignition coil primary peak voltage	150 V and more (When cranking)		⊕ probe: O/W, ⊖ probe: Ground
HO2 sensor resistance	11.7 – 14.5 kΩ		
HO2 sensor output voltage	Idle speed	0 – 1.0 V and less	
	3 000 r/min	0 – 1.0 V and more	

THROTTLE BODY

ITEM	SPECIFICATION
I.D. No.	03H0
Bore size	26 mm
Idle r/min	1 800 ± 100 r/min
Throttle cable play	2.0 – 4.0 mm

THERMOSTAT + RADIATOR + FAN + COOLANT

ITEM	STANDARD/SPECIFICATION		LIMIT
Thermostat valve opening temperature	Approx. 82 °C		—
Thermostat valve lift	Over 3 mm at 95 °C		—
Engine coolant temperature sensor resistance	20 °C	Approx. 2.45 kΩ	—
	50 °C	Approx. 0.81 kΩ	—
	80 °C	Approx. 0.32 kΩ	—
	110 °C	Approx. 0.14 kΩ	—
Radiator cap valve opening pressure	98.2 – 122.7 kPa (1.00 – 1.25 kgf/cm²)		—
Cooling fan thermo-switch operating temperature	OFF→ON	Approx. 105 °C	—
	ON→OFF	Approx. 100 °C	—
Engine coolant type	Use an antifreeze/coolant compatible with aluminum radiator, mixed with distilled water only, at the ratio of 50:50.		—
Engine coolant including reserve	Reservoir side	Approx. 250 ml	—
	Engine side	Approx. 1 350 ml	—

ELECTRICAL

Unit: mm

ITEM			STANDARD/SPECIFICATION		NOTE
Spark plug			Type	NGK: CR8E DENSO: U24ESR-N	
			Gap	0.7 – 0.8	
Spark performance			Over 8.0 at 1 atm.		
CKP sensor resistance			158 – 238 Ω		W – G
CKP sensor peak voltage			2.0 V and more		⊕ probe: W, ⊖ probe: G
Ignition coil resistance			Primary	1.2 – 3.5 Ω	Terminals
			Secondary	15 – 30 kΩ	⊕ – Plug cap
Ignition coil primary peak voltage			150 V and more (When cranking)		⊕ probe: O/W, ⊖ probe: Ground
Generator coil resistance			Charging	0.2 – 0.8 Ω	Y – Y
Generator no-load voltage (When engine is cold)			60 V and more at 5 000 r/min		
Generator Max. output			Approx. 350 W at 5 000 r/min		
Starter motor brush length			7.0		3.5
Regulated voltage			13.5 – 15.0 V at 5 000 r/min		
Starter relay resistance			3 – 6 Ω		
Battery	Type designation		GTX9-BS		
	Capacity		12 V 28.8 kC (8 Ah)/10 HR		
Fuse size	Headlight	HI	10 A		
		LO	10 A		
	Meter		10 A		
	Ignition		10 A		
	Signal		15 A		
	Power source		10 A		
	Main		30 A		

WATTAGE

Unit: W

ITEM		STANDARD/SPECIFICATION
Headlight	HI	55
	LO	55
Position light		5 × 2
Brake light/Taillight		21/5 × 2
Turn signal light		21 × 2 (Front), 16 × 2 (Rear)
License plate light		5
Speedometer light		1.2
Engine coolant temperature light		1.2
Fuel level meter light		1.2
Oil change indicator light		LED
FI indicator light		2
High beam indicator light		2
Turn signal indicator light		2 × 2
Trunk box light		3.4

BRAKE + WHEEL

Unit: mm

ITEM	STANDARD		LIMIT
Brake disc thickness	Front	4.5 ± 0.2	4.0
	Rear	4.5 ± 0.2	4.0
Brake disc runout	—		0.30
Master cylinder bore	Front	11.000 – 11.043	—
	Rear	14.000 – 14.043	—
Master cylinder piston diameter	Front	10.957 – 10.984	—
	Rear	13.957 – 13.984	—
Brake caliper cylinder bore	Front	25.400 – 25.450	—
	Rear	27.00 – 27.05	—
Brake caliper piston diameter	Front	25.318 – 25.368	—
	Rear	26.918 – 26.968	—
Brake fluid type	DOT 4		—
Wheel rim runout	Axial	—	2.0
	Radial	—	2.0
Wheel axle runout	Front	—	0.25
Wheel rim size	Front	13 M/C × MT2.50	—
	Rear	12 × MT3.00	—

SUSPENSION

Unit: mm

ITEM	STANDARD	LIMIT
Front fork stroke	92	—
Front fork spring free length	312.8	306
Front fork oil type	G-10	—
Front fork oil capacity (each leg)	141 ml	—
Front fork oil level (without spring, inner/outer tube fully compressed)	101	—
Front fork inner tube O.D.	33	—
Rear wheel travel	83	—

TIRE

Unit: mm

ITEM		STANDARD		LIMIT
Cold inflation tire pressure	Solo riding	Front	200 kPa (2.00 kgf/cm²)	—
		Rear	225 kPa (2.25 kgf/cm²)	—
	Dual riding	Front	200 kPa (2.00 kgf/cm²)	—
		Rear	280 kPa (2.80 kgf/cm²)	—
Tire size		Front	110/90-13 M/C 56P	—
		Rear	130/70-12 62P	—
Tire type		Front	MICHELIN PILOT SPORT SC	—
		Rear	MICHELIN PILOT SPORT SC	—
Tire tread depth (Recommended depth)		Front	—	1.6
		Rear	—	2.0

FUEL + OIL

ITEM	SPECIFICATION		NOTE
Fuel type	Gasoline used should be graded 91 octane or higher. An unleaded gasoline type is recommended.		
Fuel tank capacity	11.0 L		
Engine oil and final gear box oil type	SAE 10W-40, API SF/SG or SH/SJ with JASO MA		
Engine oil capacity	Oil change	1 200 ml	
	Filter change	1 300 ml	
	Overhaul	1 500 ml	
Final gear box oil capacity	Oil change	150 ml	
	Overhaul	160 ml	

Prepared by

SUZUKI MOTOR ESPAÑA, S. A.

October, 2006
Part No. 99500-31350-01E
Printed in Japan

SUZUKI MOTOR ESPAÑA, S. A.

Printed in Japan TK
K7