YAMAHA MBK

CS50/Z 2002

5RW1-AE1

SERVICE MANUAL

EAS00001

CS50/Z
SERVICE MANUAL
© 2002 by Yamaha Motor España, S.A.
1st Edition, September 2002
Any reprinting or use of this material without the prior authorisation of Yamaha Motor España, S.A. is expressly prohibited.
Printed in Spain.

EAS00002

NOTICE

This manual was produced by the Yamaha Motor España, S.A., primarily for use by Yamaha/MBK dealers and their qualified mechanics. It is not possible to include all the knowledge of a mechanic in one manual. Therefore, anyone who uses this book to perform maintenance and repairs on Yamaha/MBK vehicles should have a basic understanding of the mechanics and the techniques to repair these types of vehicles. Repair and maintenance work attempted by anyone without this knowledge is likely to render the vehicle unsafe and unfit for use.

Yamaha Motor España, S.A., is continually striving to improve all of its models. Modifications and significant changes in specifications or procedures will be forwarded to all authorized Yamaha/MBK dealers and will appear in future editions of this manual where applicabe.

NOTE:

Designs and specifications are subject to change without notice.

EAS00005

IMPORTANT INFORMATION

Particularly important information is distinguished in this manual by the following.

⚠	The Safety Alert Symbol means ATTENTION! BECOME ALERT! YOUR SAFETY IS INVOLDED!
⚠ WARNING	Failure to follow WARNING instructions could result in severe injury or death to the scooter operator, a bystander, or a person inspecting or repairing the scooter.
CAUTION:	A CAUTION indicates special precautions that must be taken to avoid damage to the scooter.
NOTE :	A NOTE provides key information to make procedures easier or clearer.

EAS00007

HOW TO USE THIS MANUAL

FORMAT OF THIS MANUAL

This manual consists of chapters for the main subject categories (See “Illustrated Symbols”).
First heading ①: This is a chapter with a symbol at the top right-hand side of each page.
Second heading ②: This title appears at the top of each page to the left of the chapter symbol. (For the “Inspection and periodic adjustments”, chapter the third heading appears.)
Third heading ③: This is a final heading.

MANUAL FORMAT

All the procedures in this manual are organized sequentially, step by step. The information has been compiled to make reading easy for the mechanic and to provide useful reference material which contains ample explanations of all disassembly, repair, assembly and inspection procedures. A particularly important procedure ④ is placed between a lines of asterisks “**” with each procedure preceded by “•”.

IMPORTANT CHARACTERISTICS

- Data and special tools are put in a box preceded by a corresponding symbol ⑤.
- A number within a circle ⑥ indicates the number of a part, and a alphabetical letter within a circle indicates data or an alignment mark ⑦, everything else is indicated by a letter within a box ⑧.
- The conditions of defective components will precede an arrow symbol and the course of action to be followd will follow the symbol ⑨.

DETAILED DIAGRAM

Each chapter provides detailed diagrams before each disassembly section, for the easy identification of disassembly/assembly procedures.

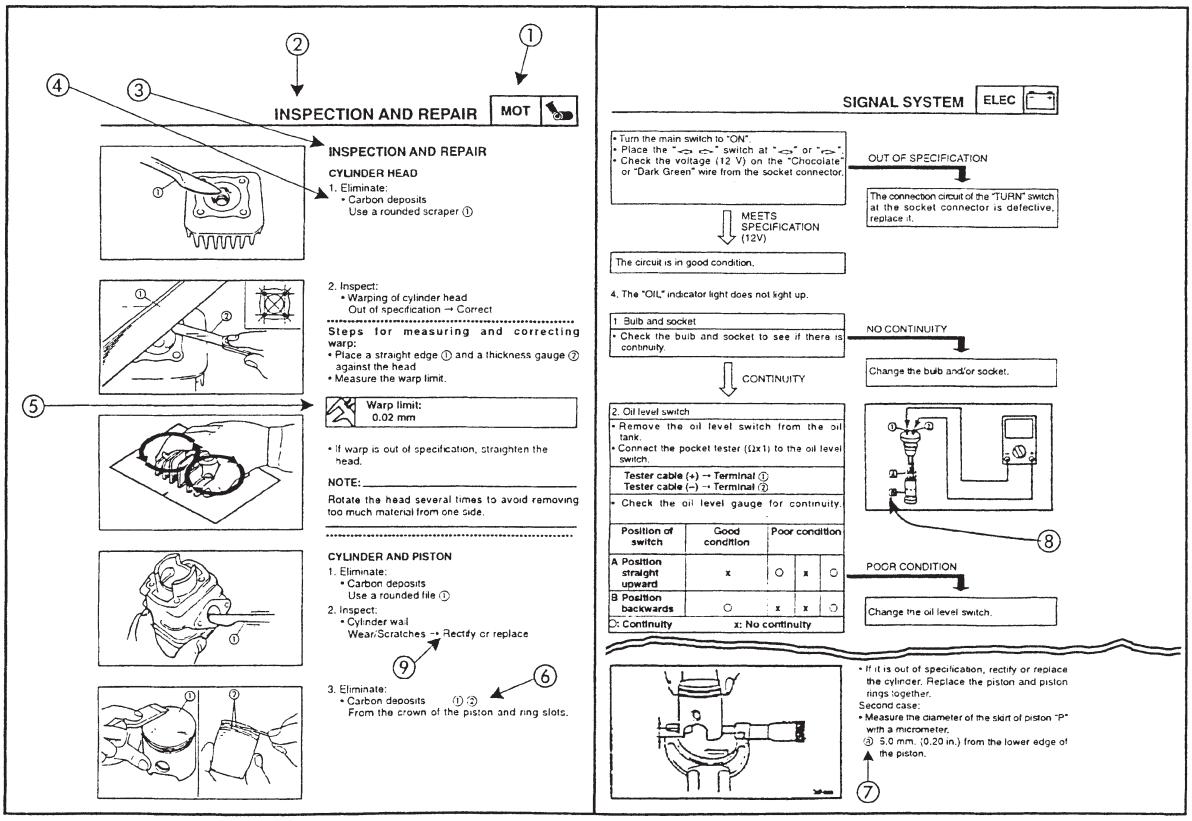

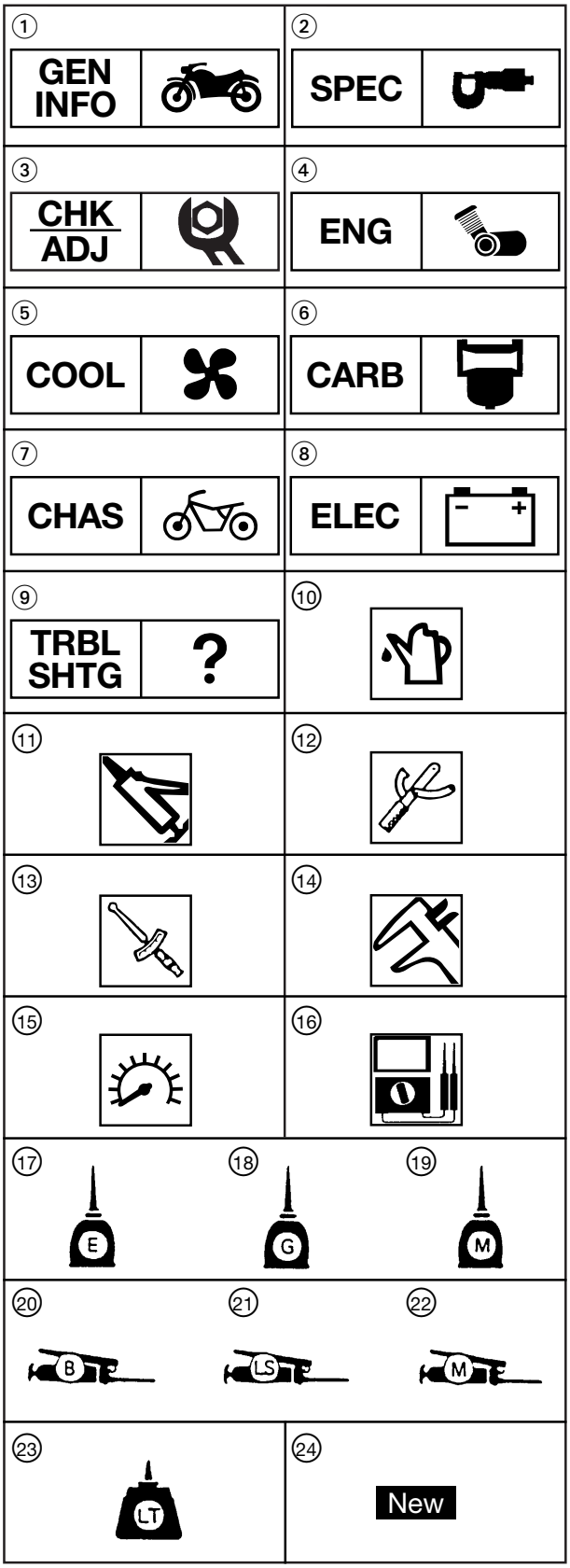

EAS00008

ILLUSTRATED SYMBOLS

(See illustration)
The symbols from ① to ⑨ are designed as thumb indices, to indicate the chapter number and index.

① General information
② Specifications
③ Periodic checks and adjustments
④ General motor revision
⑤ Cooling system
⑥ Carburetor
⑦ Chassis
⑧ Electrical system
⑨ Troubleshooting

The illustrated symbols from ⑩ to ⑯ are used to identify the specifications that appear in the text.

⑩ Refill liquid
⑪ Lubricant
⑫ Special tool
⑬ Torque
⑭ Wear, play limit
⑮ Motor speed
⑯ Ω, V, A

The illustrated symbols from ⑰ to ㉔ of the detailed diagrams indicate the grade of lubricant and the site of the lubrication point.

⑰ Apply motor oil
⑱ Apply gear oil
⑲ Apply molybdenum disulphide oil
⑳ Apply wheel bearing grease
㉑ Apply lightweight lithium soap base grease
㉒ Apply molybdenum disulphide grease
㉓ Apply blocking agent (LOCTITE®)
㉔ Use a new one

EAS00010

TABLE OF CONTENTS

GENERAL INFORMATION	GEN INFO 1
SPECIFICATIONS	SPEC 2
PERIODIC CHECKS AND ADJUSTMENTS	CHK/ADJ 3
ENGINE	ENG 4
COOLING SYSTEM	COOL 5
CARBURETOR	CARB 6
CHASSIS	CHAS 7
ELECTRICAL SYSTEM	ELEC 8
TROUBLESHOOTING	TRBL SHTG 9

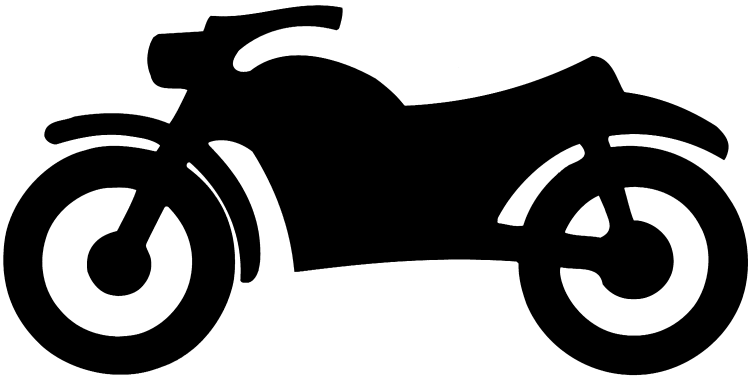

GEN INFO

1

CHAPTER 1
GENERAL INFORMATION

SCOOTER IDENTIFICATION 1-1
FRAME SERIAL NUMBER 1-1
ENGINE SERIAL NUMBER 1-1

IMPORTANT INFORMATION 1-2
REPLACEMENT PARTS 1-2
GASKETS, OIL SEALS AND O-RINGS 1-2
LOCK WASHERS/PLATES AND COTTER PINS 1-2
BEARINGS AND OIL SEALS 1-2
CIRCLIPS 1-3

SPECIAL TOOLS 1-4

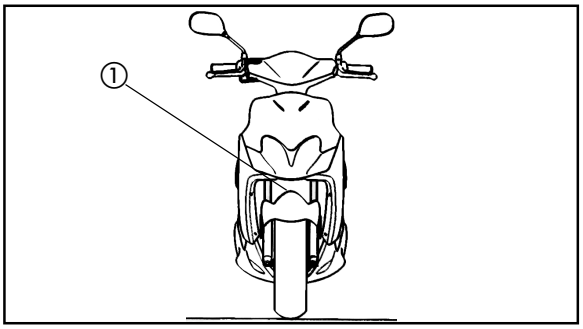

EAS00015

GENERAL INFORMATION

SCOOTER IDENTIFICATION

FRAME SERIAL NUMBER

The frame serial number 1 is stamped on the chassis.

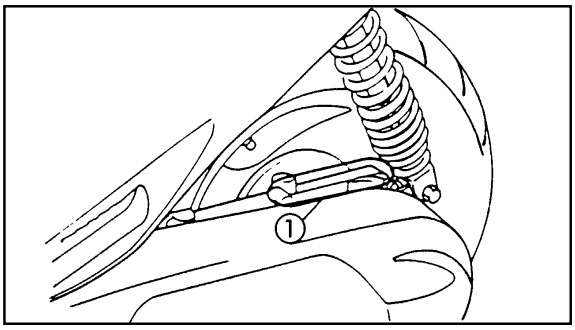

ENGINE SERIAL NUMBER

The serial number of the engine 1 is stamped on the raised portion of the rear left section of the transmission box.

NOTE:

The first three digits of these numbers are for identifying the model; the remaining digits constitute the production number of the unit.

NOTE:

Designs and specifications are subject to change without notice.

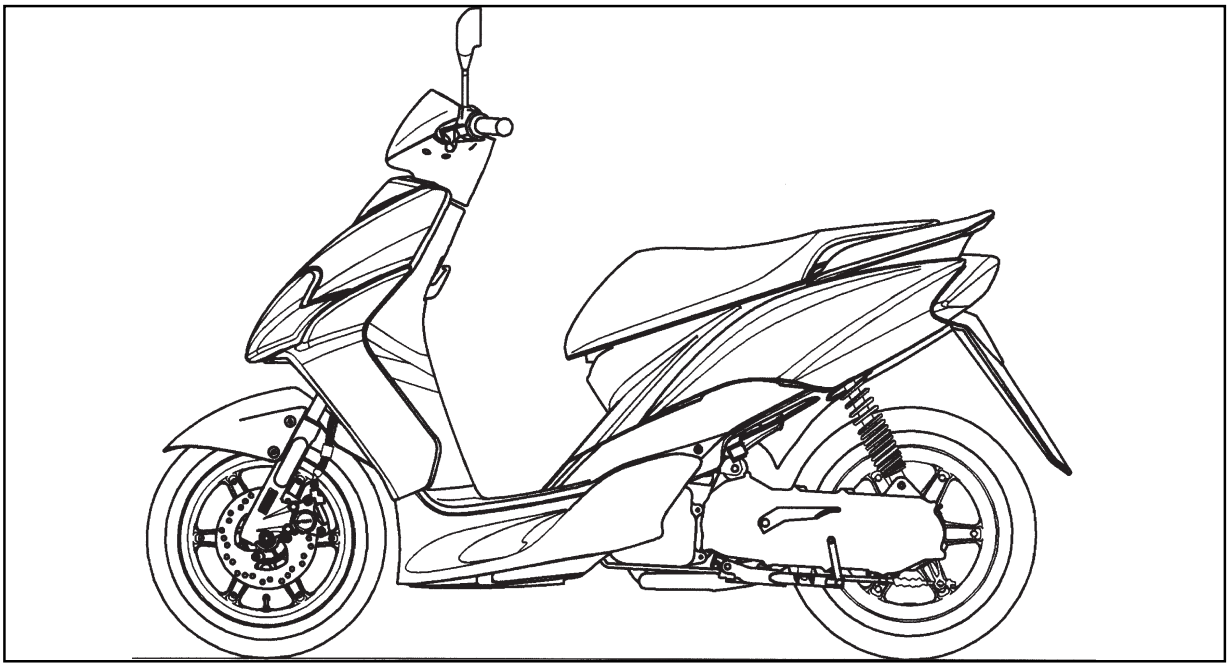

IMPORTANT INFORMATION

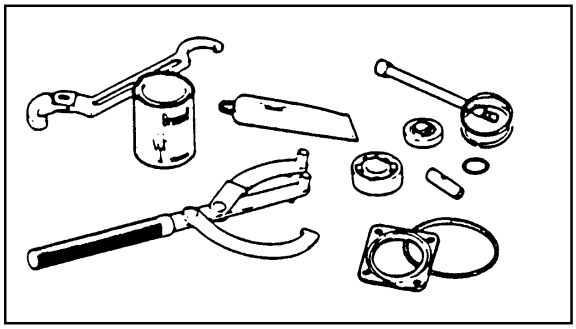

EAS00021

REPLACEMENT PARTS

1. Use only genuine Yamaha/MBK parts for all replacements. Use the oil and/or grease recommended by Yamaha/MBK for assembly and adjustment.

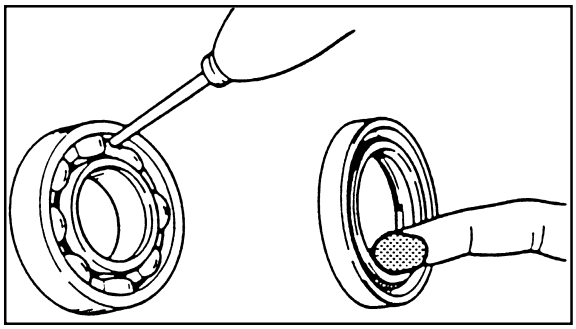

EAS00022

GASKETS, OIL SEALS AND O-RINGS

1. Replace all gaskets, seals and O-rings when overhauling the engine. All gasket surfaces, oil seal lips and O-rings must be cleaned.
2. Properly oil all mating parts and bearings during reassembly. Apply grease to the oil seal lips.

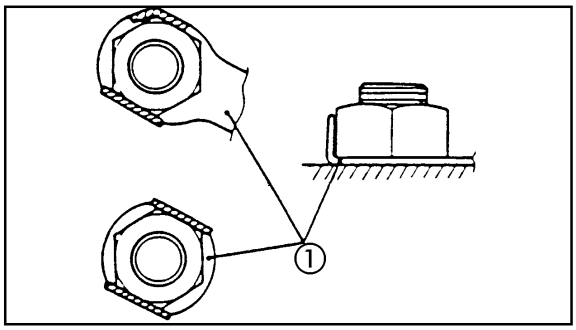

EAS00023

LOCK WASHERS/PLATES AND COTTER PINS

1. Replace all lock washers/plates 1 and cotter pins after removal. Bend lock tabs along the bolt or nut flats after the bolt or nut has been tightened to specification.

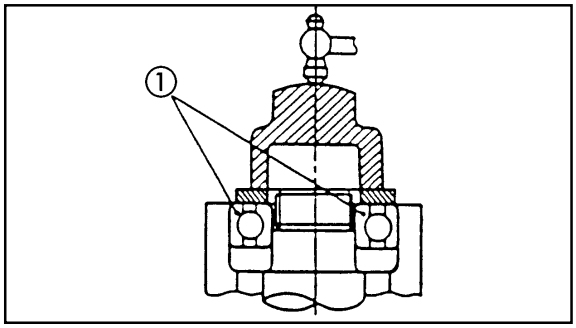

EAS00024

BEARINGS AND OIL SEALS

1. Install the bearings 1 and oil stops 2 with their manufacturer brands or numbers facing outwards. (In other words, the stamped letters should be on the side exposed to view.) When installing oil seals, apply a light coating of lightweight lithium base grease to the seal lips. Put oil on the bearings when installing.

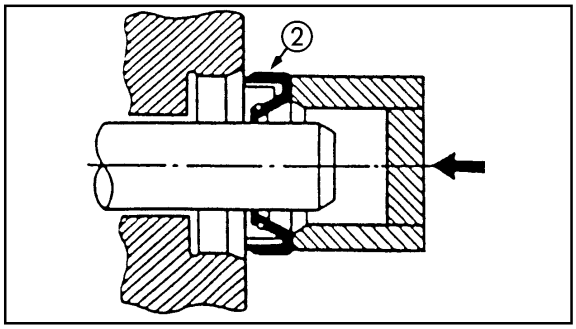

CAUTION:

Do not use compressed air to spin the bearings dry. This will damage the bearing surface.

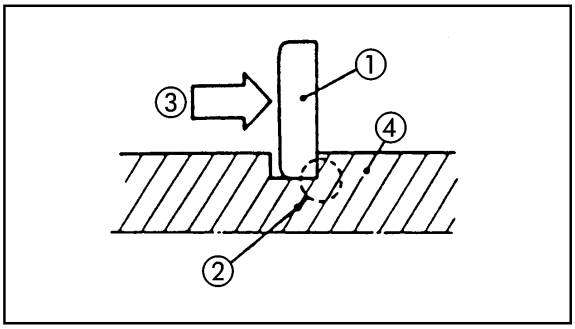

EAS00025

CIRCLIPS

1. Check all circlips carefully before reassembly. Always replace piston pin clips after one use. Replace distorted circlips. When installing a circlip ①, make sure that the sharp-edged corner ② is positioned opposite the thrust ③ it receives. See sectional view.
   ④ Shaft.

EAS00027

SPECIAL TOOLS

The following special tools are necessary for complete and accurate tune-up and assembly. Use only the appropriate special tools; this will help prevent damage caused by the use of inappropriate tools or improvised techniques.
When placing an order, refer to the list provided below to avoid any mistakes.

Tool No.	Tool name / Usage	Illustration
90890-01235	Rotor holding tool This tool is used to remove the flywheel magneto.	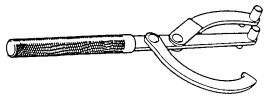
90890-01337	Clutch spring bracket This tool is used to remove the clutch nut while holding the compression spring.	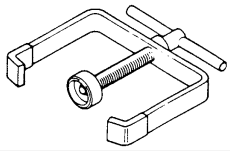
90890-01274 -01275 -01277 -01288	Container of the crankshaft installer a Bolt of the crankshaft installer b Adapter c, Spacer d These tools are used to install the crankshaft.	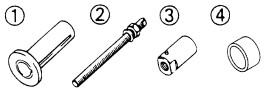
90890-01362 .	Flywheel puller For removing the flywheel.	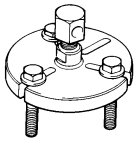
90890-01135	Crankcase separation tool This tool is used to remove the crankshaft or separate the crankcase.	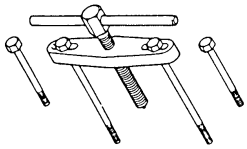
90890-01384	Oil seal guide Protects the edge of the oil seal during the installation of the secondary sliding pulley wheel.	
90890-01403	Ring nut wrench This tool is used to loosen and tighten the steering ring nut.	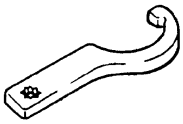
90890-01701	Pulley bracket This tools is used to disassemble and assemble the secondary pulley.	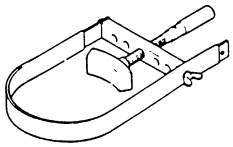
90890-03079	Thickenss gauge This tool is used to measure the clearance.	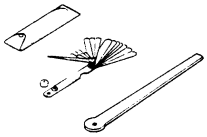

Tool No.	Tool name / Usage	Illustration
90890-03112	Pocket tester This instrument is very important for checking the electrical system.	
90890-03113	Engine tachometer This tool is necessary for detecting the engine rpm.	
90890-01409	Oil seals guide This tool is used to install the left oil guide of the crankcase.	
90890-01410	Oil seals installer This tool is used to install the left oil seal of the crankcase.	
90890-06754	Ignition checker This instrument is necessary to check the components of the ignition system.	
90890-85505	Yamaha bond No. 1215 This bond (sealant) is used for crankcase mating surface, etc.	
90890-01348	Locknut wrench This tool is used to loosen and tighten the secondary sheave nut.	
90890-01367 ① -01400 ②	Front oil seals inserter Counterweight a Adapter b These tools are used in the installation of seals.	
90890-01326 -01294	T-handle Damper rod holder These tool are used for holding the damper rod holder when removing or installing the damper rod holder.	

SPEC 2

CHAPTER 2
SPECIFICATIONS

GENERAL SPECIFICATIONS 2-1

MAINTENANCE SPECIFICATIONS 2-3
ENGINE 2-3
CHASSIS 2-5
ELECTRICAL SYSTEM 2-6

CONVERSION TABLE.....2-7

GENERAL TIGHTENING TORQUE SPECIFICATIONS 2-7

TIGHTENING TORQUES 2-8
ENGINE TIGHTENING TORQUES 2-8
CHASSIS TIGHTENING TORQUES 2-9

COOLING SYSTEM (CS50Z only) 2-10

CABLE ROUTING 2-11

SPECIFICATIONS

GENERAL SPECIFICATIONS

Model	CS50	CS50Z
Dimensions:		
Overall lenght	1.740 mm	
Overall widht	675 mm	
Overall height	1.065 mm	
Seat height	770 mm / 776 mm	
Wheelbase	1.210 mm	
Minimum ground clearance	132 mm	
Basic weight (With oil and full fuel tank):	80,5 kg	83,7 kg
Engine:		
Engine type	Plate valve, gasoline, 2-strokes	
	air-cooled	Liquid cooled
Cylinder arrangement	Forward-inclined single cylinder	
Displacement	49,3 cc	
Bore x stroke	40,0 x 39,2 mm	
Compression ratio	10,2 : 1	11,4 : 1
Starting system	Electric and kickstarter	
Lubrication system:	Yamaha autolube	
Oil type or grade:		
Engine oil	2-strokes motor oil (JASO grade FC)	
Transmission oil	SE type 10W30 SAE motor oil	
Oil capacity:		
Oil tank (motor oil)	1,4 L	
Transmission fluid		
Periodic fluid change	0,10 L	
Total amount	0,11 L	
Cooling system capacity: (Total amount)	–	0,910 L
Air filter:	Wet type element	
Fuel:		
Type	Unleaded gasoline	
Fuel tank capacity	5,5 L	
Carburetor:		
Type/quantity	PHVA12ZS/1, PY12/1	PHVA12ZS/1
Manufacturer	DELL'ORTO, GURTNER	DELL'ORTO
Spark plug:		
Type/Manufacturer	BR8HS/N.G.K.	
Spark plug gap	0,6 ~ 0,7 mm	
Clutch type:	Dry, centrifugal automatic	
Transmission:		
Primary reduction system	Helical gear	
Primary reduction ratio	52/13 (4.000)	
Secondary reduction system	Straight gearing	
Secondary reduction ratio	42/13 (3.230)	43/13 (3.310)
Transmission type	Single speed automatic (V-belt type)	
Operation	Centrifugal automatic type	

Model	CS50	CS50Z
Chassis:		
Frame type	Steel tube underbone	
Front axle incline angle	25°	
Steering angle base	80 mm	
Tire:		
Size/Type (Front)	110/70-12 / 47 L	
Size/Type (Rear)	120/70-12 / 51 L, 130/70-12 / 56 L	
Tire pressure (cold tire):		
Front	175 KPa (1,75 kg/cm^2)	
Rear	200 KPa (2,00 kg/cm^2)	
Maximum Load:		
Front	175 KPa (1,75 Kg/cm^2)	
Rear	225 KPa (2,25 Kg/cm^2)	
Brake:		
Type of front brake	Disk brake	
Activation	Right hand operation	
Type of rear brake	Drum brake	
Activation	Left hand operation	
Suspension:		
Front suspension	Telescopic fork	
Rear suspension	Unit swing	
Shock absorber:		
Front shock absorber	Coil spring/Oil damper	
Rear shock absorber	Coil spring/Oil damper	
Wheel travel:		
Front wheel travel	70 mm	
Rear wheel travel	60 mm	
Electrical:		
Ignition system	DC-CDI	
Generator system	Magnetic flywheel	
Battery type or model	Maintenance free	
Battery capacity	12V 4AH	
Type of headlamp:	Bulb	
Bulb wattage/quantity:		
Headlight	12V, 35W / 35Wx1	
Tail/brake light	12V, 5W / 21Wx1	
Turn signal light	12V, 10Wx2 (rear) / 12V, 16Wx2 (front)	
Auxiliary light	12V, 5W x 2	
License plate light	12V, 5W x 1	
Meter lighting	12V, 1,2W x 2	
Indicator light voltage/quantity:		
Oil level warning light	LED	
Turn signal indicator light	12V, 2W x 2	
High beam indicator light	12V, 2W x 1	
Coolant temperature warning light	–	LED

MAINTENANCE SPECIFICATIONS

ENGINE

Model	CS50	CS50Z
Cylinder head: Warp limit	0,02 mm * The lines indicate measurement with straight edge	
Cylinder: Bore size <Limit> Taper limit Out of round limit	39,993 ~ 40,012 mm <40,1 mm> 0,05 mm 0,01 mm	
Piston: Piston size	39,952 - 39,972 mm	39,957 - 39,997 mm
Measuring point	5 mm	
Piston clearance	0,034 - 0,047 mm	0,029 - 0,042 mm
On measurement 1st	40,25 mm	
Piston rings: Cut-away section (BXT)/TYPE Top ring 2nd ring	1.5 x 1.8 mm/Keystone 1.5 x 1.8 mm/Keystone	
End gap (installed) Top ring 2nd ring <Limit>	0,15 ~ 0,35 mm 0,15 ~ 0,35 mm <0,6 mm>	
Sice clearance Top ring 2nd ring	0,03 ~ 0,05 mm 0,03 ~ 0,05 mm	
Crankshaft:		
Crank width “A”	37,90 ~ 37,95 mm	
Runout limit “C”	0,03 mm	
Large end of rod side clearance “D”	0,2 ~ 0,5 mm	
Small end of rod clerance “F”	0,4 ~ 0,8 mm	

Model	CS50		CS50Z
Automatic centrifugal clutch:			
Clutch shoe thickness	2,0 mm		
<Limit>	<1,0 mm>		
Clutch shoe spring free length	29,9 mm		
Clutch - in revolution	3.350 - 3.850 r/min.		3.950 - 4.450 r/min.
Clutch - stall revolution	5.200 - 6.000 r/min.		6.900 - 7.700 r/min.
V-belt:			
V-belt width	16,5 mm		
<Limit>	<15,7 mm>		
Transmission:			
Main axle eccentricity limit	0,08 mm		
Drive axle eccentricity limit	0,08 mm		
Pedal starting:			
Type	Ratchet		
Strength of pedal spring	150 ~ 250 g		
Air filter oil grade:	For foam air filter or air-cooled 2-stroke motor oil		
Carburetor:			
Type / Manufacturer / Amount	PHVA12ZS/1 DELL'ORTO	PY12/1 GURTNER	PHVA12ZS/1 DELL'ORTO
Main jet / Model (M.J.)	#65	#62	#65
Jet needle (J.N.)	A20-3/5	B10A-2/3	A35-4/5
Main air jet (M.A.J.)	ø 2.5	ø 2.0	ø 2.5
Pilot jet (P.J.)	#36	#38	#36
Pilot screw (P.A.S.)	2 - $2^1/_4$	$1^3/_4$ - 2	$1^3/_4 \pm {}^1/_8$
Valve seat size	1.2	1.4	1.2
Engine idling speed	1650 ~ 1950 r/min		
Starter jet	#50	#42	#50

CHASSIS

Model		CS50	CS50Z
Steering system:			
Steering bearing type	Upper	Ball bearing	
	Lower	Ball bearing	
Front suspension:			
Front fork travel		70 mm	
Fork spring free length		224 mm	
Spring rate	(K_1)	1,33 Kgf/mm	
	(K_2)	2,0 Kgf/mm	
Oil capacity		45 cc ± 1	
Oil grade		Fork oil: 10W or equivalent	
Rear suspension:			
Shock absorber stroke		60 mm	
Spring free length		220 mm	
Spring rate	(K_1)	4,58 Kgf/mm	
	(K_2)	6,12 Kgf/mm	
Wheels:			
Type of front wheel		Alloy rim	
Type of rear wheel		Alloy rim	
Size/material of front tyre		2,75 x 12 / aluminium	
Size/material of rear tyre		3,00 x 12 / aluminium	
Rim runout limit			
	Radial	1,0 mm	
	Lateral	1,0 mm	
Front disc brake:			
Type		Single	
Disc outside diameter x thickness		ø 190 x 3,5 mm	
Pad thickness		4,5 mm	
<Limit>		<0,5 mm>	
Interior diameter of pump		11 mm	
Calliper interior diameter		30 mm	
Brake fluid type		DOT #4	
Rear drum brake:			
Type		Single cam	
Drum inside diameter		ø 110 mm	
<Limit>		<ø 110,5 mm>	
Shoe thickness		4 mm	
<Limit>		<2 mm>	
Brake levers:			
Free play of the front brake lever (right)/measurement		2 ~ 5 mm / At the end of the lever	
Free play of the rear brake lever (left)/measurement		5 ~ 10 mm / At the end of the lever	

ELECTRICAL SYSTEM

Model	CS50	CS50Z
Ignition system:		
Type	DC-CDI	
Ignition timing (B.T.D.C.)	14°/5.000 r/min	
Pickup coil resistance (colour)	400 ~ 600 Ω at 20 °C (68 °F) (Black-White/Blue)	
Igntion coil:		
Minimum spark gap	6.0 mm	
Primary winding resistance	0.56 ~ 0.84 Ω at 20 °C	
Secondary winding resistance	5.68 ~ 8.52 KΩ at 20 °C	
Charging system:		
Normal output	0.4 A or more/3.000 r/min 1.0 A or less/8.000 r/min	
Source coil resistance (colour)	0.288 ~ 0.432 Ω at 20 °C (68 °F) (White-Black)	
Lighting system:		
Lighting output	12 V or more/3.000 r/min 15 V or less/8.000 r/min	
Lighting coil resistance (colour)	0.176 ~ 0.264 Ω at 20 °C (68 °F) (Yellow/Red-Black)	
Battery:		
Type	GT4L-BS	
Capacity	12V 4 Ah	
Electric starter system:		
Type	Constant mesh type	
Starter motor:		
Output	0.14 kw	
Armature coil resistance	0.064 ~ 0.079 Ω at 20 °C (68°F)	
Brush length	3.9 mm	
<Limit>	<0.9 mm>	
Circuit breaker:		
Type	Fuse	
Amperage/Quantity	7.5A x 1	

EAS00028

CONVERSION TABLE

All specification data in this manual are listed in SI and METRIC UNITS.
Use this table to convert METRIC unit data to IMPERIAL unit data.

Ex.

METRIC		MULTIPLIER		IMPERIAL
** mm	x	0.03937	=	** in
2 mm	x	0.03937	=	0.08 in

CONVERSION TABLE

METRIC TO IMPERIAL			
	Metric unit	Multiplier	Imperial unit
Tightening Torque	m•kg	7.233	ft•lb
	m•kg	86.794	in•lb
	cm•kg	0.0723	ft•lb
	cm•kg	0.8679	in•lb
Weight	kg	2.205	lb
	g	0.03527	oz
Speed	km/h	0.6214	mi/h
Distance	km	0.6214	mi
	m	3.281	ft
	m	1.094	yd
	cm	0.3937	in
	mm	0.03937	in
Volume, Capacity	cc (cm^3)	0.03527	oz (IMP liq.)
	cc (cm^3)	0.06102	cu•in
	L (liter)	0.8799	qt (IMP liq.)
	L (liter)	0.2199	gal (IMP liq.)
Misc.	kg/mm	55.997	lb/in
	kg/cm^2	14.2234	psi (lb/in^2)
	Centigrade (°C)	9/5 + 32	Fahrenheit (°F)

EAS00029

GENERAL TIGHTENING TORQUE SPECIFICATIONS

This chart specifies tightening torques for standard fasteners with a standard ISO thread pitch. Tightening torque specifications for special components or assemblies are provided for each chapter of this manual. To avoid warpage, tighten multi-fastener assemblies in a crisscross pattern and progressive stages until the specified tightening torque is reached. Unless otherwise specified, tightening torque specifications require clean, dry threads. Components should be at room temperature.

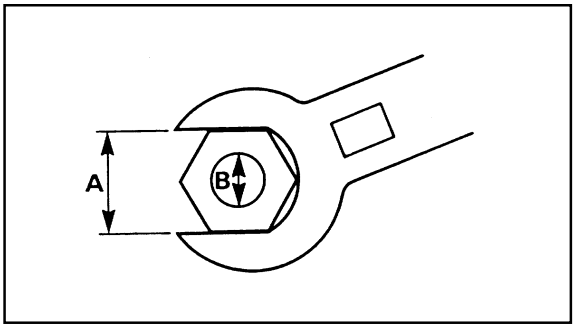

A: Width across flats
B: Thread diameter

A (Nut)	B (Bolt)	General tightening torques	
		Nm	m • kg
10 mm	6 mm	6	0.6
12 mm	8 mm	15	1.5
14 mm	10 mm	30	3.0
17 mm	12 mm	55	5.5
19 mm	14 mm	85	8.5
22 mm	16 mm	130	13.0

TIGHTENING TORQUES

ENGINE TIGHTENING TORQUES

Part to be tightened	Part name	Thread size	Q'ty	Tightening torque		Remarks
				Nm	m•kg	
Spark plug	–	M 14	1	20	2,0	
Cylinder head and cylinder	Nut	M 7	4	14	1.4	
Cylinder	Stud	M 7	4	17	1.7	
Air protector 2 (A/C)	Screw	M 6	3	7	0.7	
Air protector 3 (A/C)	Screw	M 6	1	2	0.2	
Fan (A/C)	Screw	M 6	3	7	0.7	
Automatic lubrication pump	Screw	M 5	2	4	0.4	
Reed valve	Bolt	M 6	4	11	1.1	
Air filter	Screw	M 6	1	9	0.9	
Carburettor cover	Screw	M 4	2	2	0.2	
Exhaust pipe	Screw	M 6	2	9	0.9	
Muffler	Bolt	M 8	2	26	2.6	
Exhaust pipe protector	Bolt	M 6	2	0.7	0.7	LT
Exhaust pipe cover	Bolt	M 6	5	0.7	0.7	LT
Crankcase	Bolt	M 6	6	10	1.0	
Cover of crankcase 2	Bolt	M 6	6	10	1.0	
Cover of crankcase 1	Bolt	M 6	12	12	1.2	
Air conduct (A/C)	Screw	M 6	2	7	0.7	
Crankcase bracket	Screw	M 6	2	7	0.7	
Drain bolt	Bolt	M 8	1	18	1.8	
Oil plug	Plug	M 14	1	3	0.3	
Intermediate gear plate	Screw	M 6	2	8	0.8	
Kickstarter	Bolt	M 6	1	9	0.9	
Starter motor	Bolt	M 6	2	13	1.3	
Clutch housing	Nut	M 10	1	40	4.0	
Primary pulley	Nut	M 12	1	45	4.5	
Magnet base	Screw	M 6	2	8	0.8	
Magnet rotor	Nut	M 12	1	43	4.3	
Cranckshaft oil seal stay	Bolt	M 6	1	8	0.8	
Water pump housing cover (L/C)	Bolt	M 6	3	7	0.7	
Water pump driver bolts (L/C)	Bolt	M 6	3	6.5	0.65	
Magnet cover (L/C)	Bolt	M 6	3	6.5	0.65	

CHASSIS TIGHTENING TORQUES

Part to be tightened	Thread size	Tihtening torque		Remarks
		Nm	m•kg	
Frame, Engine and Parts				
Frame with bracket 3	M10 x 1.25	42	4.2	
Engine bracket 3 with the engine	M12 x 1.25	84	8.4	
Cushion and related parts				
Rear shock absorber (bracket side)	M10 x 1.25	31.5	3.15	
Rear shock absorber (engine side)	M8 x 1.25	17.5	1.75	
Forks, handlebar and parts				
Handlebar or grip with axle guide	M10 x 1.25	42.5	4.25	
Axle guide	M25 x 1.00	75	7.5	See chapter 3 “ADJUSTING THE STEERING HEAD”
Brake tube joint screw	M10 x 1.25	23	2.3	
Seats and related parts				
Seat lock unit	M6 x 1.0	9.75	0.975	
Hook bracket	M6 x 1.0	8	0.8	
Case	M6 x 1.0	8	0.8	
Covers and related parts				
Plastic parts, plastic covers	M5	1.5	0.15	
Frame footrest plate	M6 x 1.0	4	0.4	
Leg protector 2/frame	M6 x 1.0	4	0.4	
Front and rear wheels				
Front wheel axle	M10 x 1.25	47.5	4.75	
Rear wheel axle	M14 x 1.5	125	12.5	
Rear brake lever	M6 x 1.0	13.5	1.35	
Shoe axle	M10 x 1.25	12	1.2	
Brake disk	M8 x 1.25	23	2.3	LT
Front brake calliper	M8 x 1.25	23	2.3	LT
Fuel tank				
Fuel cut-off valve		11	1.1	

COOLING SYSTEM (L/C VERSION ONLY)

① Radiator
② Water pump
③ Cylinder
④ Reservoir tank

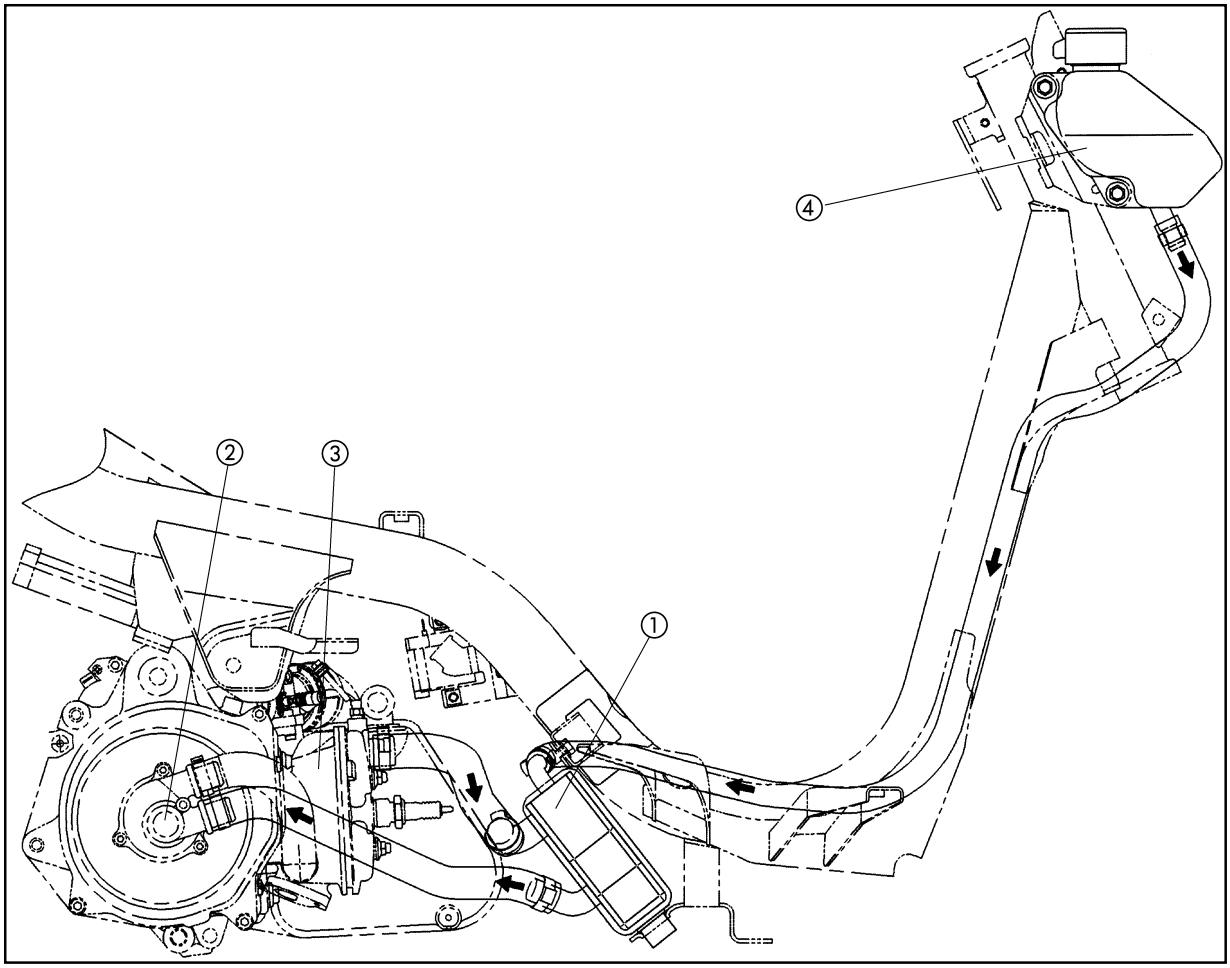

CABLE ROUTING

① Front brake hose
② Rear brake cable
③ Front brake calliper
④ Front mudguard
⑤ Taillight
⑥ Vacuum pipe
⑦ Fuel pipe
⑧ Intake hose (L/C)
⑨ Wire harness
⑩ Engine breather
⑪ Throttle cable
⑫ Seat lock cable
⑬ Coolant hose (L/C)
⑭ DC-CDI
⑮ Coolant hoses - Carburetor (L/C)

A Insert the three tubes through the clamp
B Connect the oil hose to the carburettor
C Set the intake hose under the reinforcement (L/C)
D Clamp the fuel pipe to the carburettor
E Tighten together the ground cable and the starter motor
F Clamp all the cables except the coolant hose (L/C) without tightening
G Clamp the intake hose to the air filter box (L/C)
H Pass the brake cable through the guide

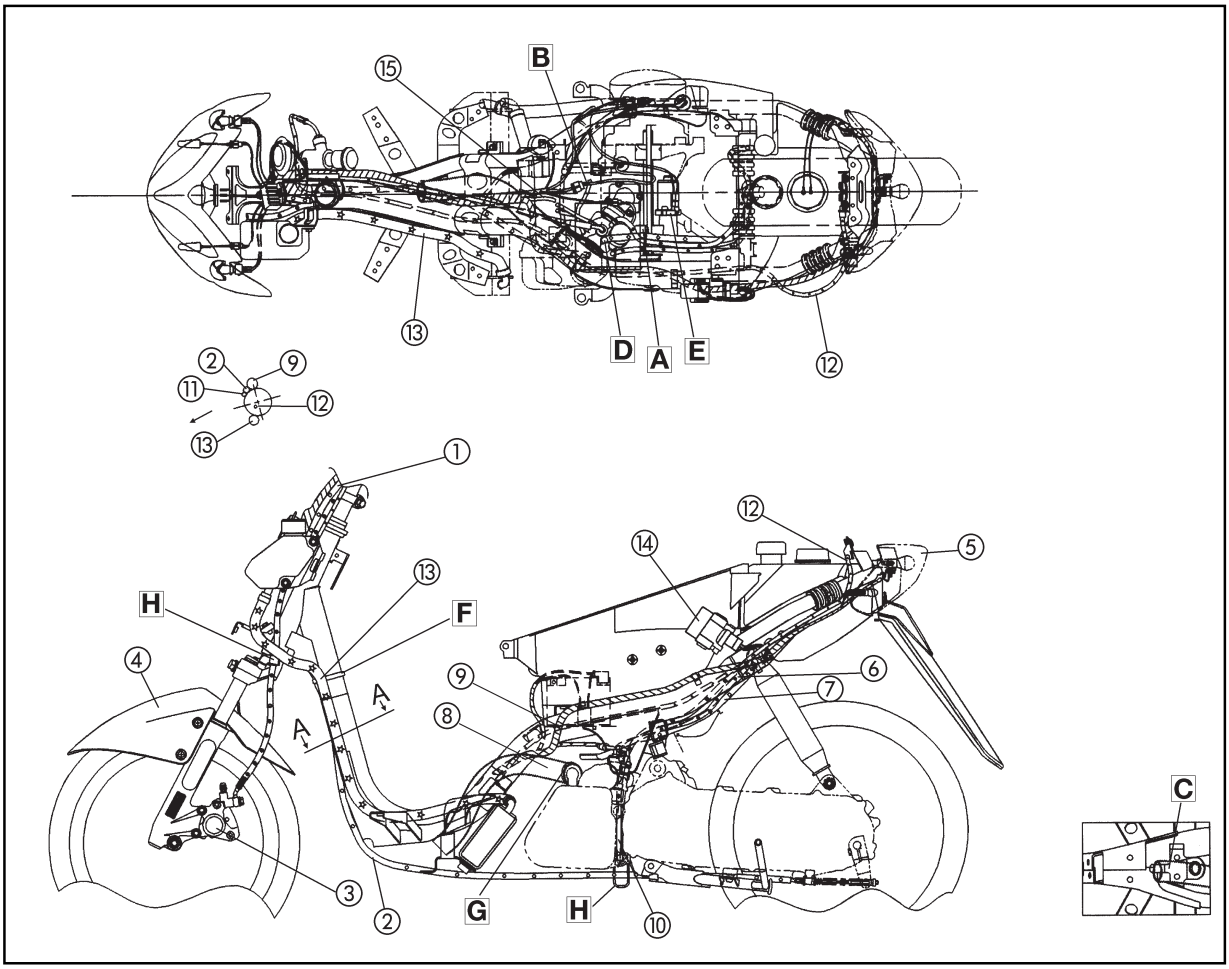

CABLE ROUTING

① Rectifier / Regulator
② Main switch
③ Fuel level gauge
④ Horn
⑤ Ignition coil
⑥ Spark plug wire
⑦ Oil level gauge
⑧ Oil tank
⑨ Speedometer cable

A Clamp the wire harness, brake cable and throttle to the frame
B Clamp the oil hose to the tank
C Connect the oil hose to the pump
D Tie both ends
E Tighten together the ground cable and the ignition coil
F Pass the speedometer cable through the guide
G Insert the seat lock cable throught the orifice of the frame

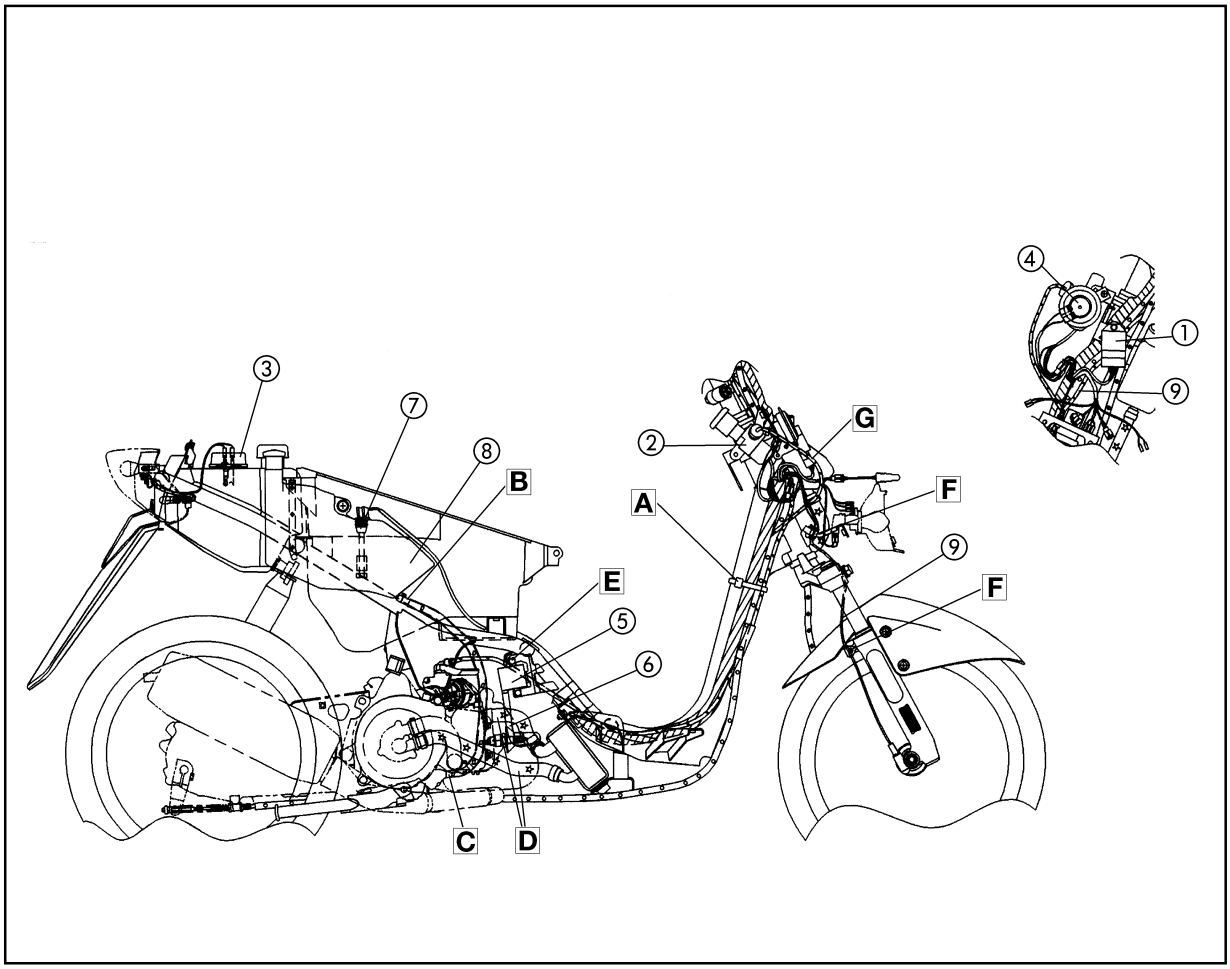

CABLE ROUTING

① Front brake switch
② Wire harness
③ Throttle cable
④ Rear brake cable
⑤ Front brake hose

A Throttle tension cable. Cover then adjust
B Connect the brake switch cables in this area
C Do not pass the brake hose through the clamp

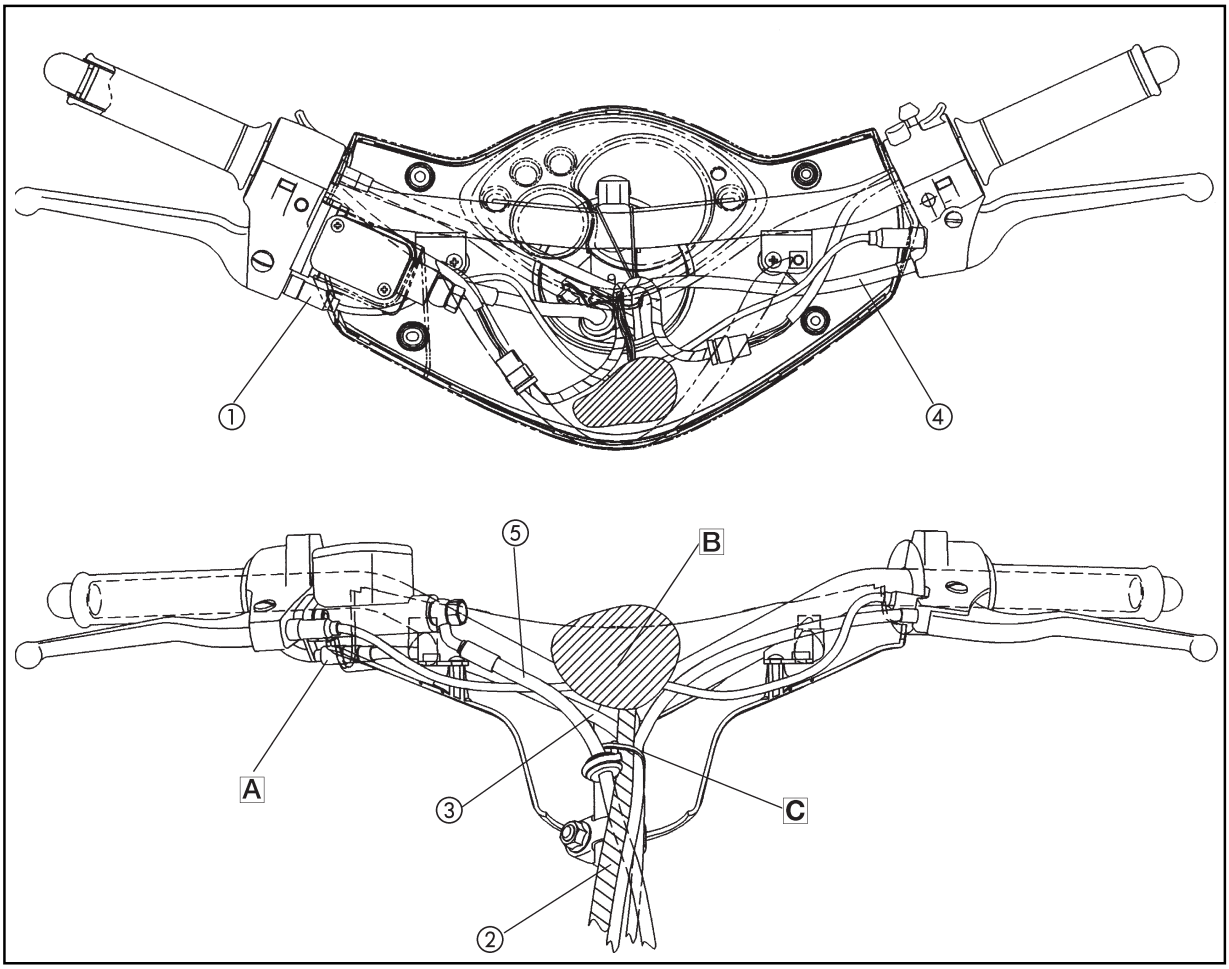

CHK

ADJ

3

CHAPTER 3
PERIODIC CHECKS AND ADJUSTMENTS

INTRODUCTION/PERIODIC MAINTENANCE/LUBRICATION INTERVALS.....3-1

REAR BODYWORK AND MUDGUARD 3-2
REMOVAL 3-2
INSTALLATION 3-3

FRONT COWLING AND FOOTREST 3-4
REMOVAL 3-4
INSTALLATION 3-5

HANDLEBAR COVERS 3-6
REMOVAL 3-6
INSTALLATION 3-7

ENGINE 3-8
ADJUSTING THE ENGINE IDLING SPEED 3-8
ADJUSTING THE THROTTLE CABLE FREE PLAY 3-9
CHECKING THE SPARK PLUG 3-10
CHECKING THE ENGINE OIL LEVEL 3-11
CHANGING THE TRANSMISSION OIL 3-12
AUTOLUBE PUMP AIR BLEEDING 3-12
CLEANING THE AIR FILTER ELEMENT.....3-13
CHECKING THE COOLANT LEVEL (CS50Z only) 3-14
CHANGING THE COOLANT (CS50Z only) 3-15

CHASSIS 3-18
ADJUSTMENT THE FRONT BRAKE LEVER.....3-18
ADJUSTMENT THE REAR BRAKE LEVER 3-18
CHECKING THE FRONT BRAKE PADS 3-18
CHECKING THE REAR BRAKE SHOES 3-19
CHECKING THE BRAKE FLUID LEVEL.....3-19
BLEEDING THE HYDRAULIC BRAKE SYSTEM 3-20
CHECKING AND ADJUSTING THE STEERING HEAD 3-21
CHECKING THE TIRES 3-23
CHECKING THE WHEELS 3-23
CHECKING THE FRONT FORK 3-23
REAR SHOCK ABSORBER INSPECTION.....3-24

ELECTRICAL SYSTEM.....3-25
CHECKING AND CHARGING THE BATTERY 3-25
CHECKING THE FUSE 3-30
REPLACING THE HEADLIGHT BULB 3-31
ADJUSTING THE HEADLIGHT BEAM 3-31

EAS00036

PERIODIC CHECKS AND ADJUSTMENTS

INTRODUCTION

This chapter includes all the information necessary to perform the recommended inspections and adjustments. These preventive maintenance procedures, if followed correctly, will ensure more reliable operation of the vehicle and a longer life of service. The need for costly revision and repair work will be greatly reduced. This information is applicable to vehicles that are already in service, as well as for new vehicles that have been prepared for sale. All service technicians must become familiar with the entire chapter.

EAS00037

PERIODIC MAINTENANCE AND LUBRICATION INTERVALS

No.		ITEM	CHECK OR MAINTENANCE JOB	ODOMETER READING (x 1.000 km)					ANNUAL CHECK
				1	6	12	18	24	
1	*	Fuel line	• Check fuel hoses and vacuum hose for cracks.		√	√	√	√	√
2		Spark Plug	• Check condition. • Clean and regap.		√		√		
			• Replace.			√		√	
3		Air filter element	• Clean. • Replace.		√	 √	√	 √	
4	*	Front brake	• Check operation, fluid level and vehicle for fluid leakage.	√	√	√	√	√	√
			• Replace brake pads.	Whenever worn to the limit					
5	*	Rear brake	• Check operation and adjust brake lever freeplay.	√	√	√	√	√	√
			• Replace brake shoes.	Whenever worn to the limit					
6	*	Brake hose	• Check for cracks or damage.		√	√	√	√	√
			• Replace.	Every 4 years					
7	*	Wheels	• Check runout and for damage.		√	√	√	√	
8	*	Tires	• Check tread depth and for damage. • Replace if necessary. • Check air pressure. • Correct if necessary.		√	√	√	√	
9	*	Wheel bearings	• Check bearing for looseness or damage.		√	√	√	√	
10	*	Steering bearings	• Check bearing play and steering for roughness.	√	√	√	√	√	
			• Lubricate with lithium-soap-based grease.	Every 24.000 km					
11	*	Chassis fasteners	• Make sure that all nuts, bolts and screws are properly tightened.		√	√	√	√	√
12		Centerstand	• Check operation. • Lubricate.		√	√	√	√	√
13	*	Front fork	• Check operation and for oil leakage.		√	√	√	√	
14	*	Rear shock absorber assembly	• Check operation and shock absorber for oil leakage.		√	√	√	√	
15	*	Carburetor	• Check starter (choke) operation. • Adjust engine idling speed.	√	√	√	√	√	√
16	*	Autolube pump	• Check operation. • Bleed if necessary.	√		√		√	√
17	*	Cooling system	• Check coolant level and vehicle for coolant leakage.		√	√	√	√	√
		(L/C version only)	• Change.	Every 3 years					
18		Final transmission	• Check vehicle for oil leakage.	√	√		√		
		oil	• Change.	√		√		√	
19	*	V-belt	• Replace.			√		√	
20		Front and rear brake switches	• Check operation.	√	√	√	√	√	√
21	*	Moving parts and cables	• Lubricate.		√	√	√	√	√
22		Lights, signals and switches	• Check operation. • Adjust headlight beam.	√	√	√	√	√	√

*: It is recommended that these items be revised by an authorized Yamaha/MBK dealer.
**: Apply grease for mid-weight bearings.

NOTE:

- The air filter needs more frequent service if you are riding in unusually wet or dusty areas.
- Hydraulic brake service
- •• Regularly check and, if necessary, correct the brake fluid level.
- •• Replace the brake hoses every four years and if cracked or damaged.

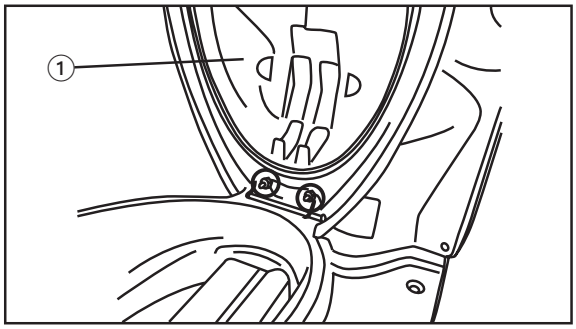

REAR BODYWORK, MUDGUARD

REMOVAL

1. Remove:
   - seat ①

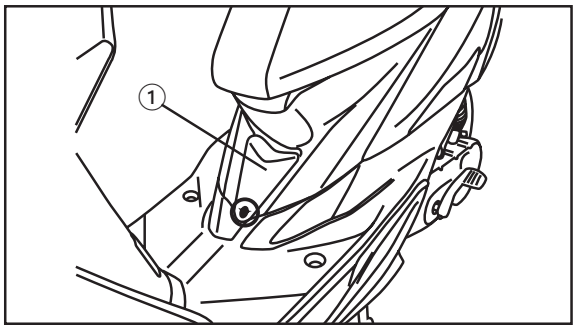

2. Remove:
   - central panel ①

NOTE:

Slide the panel to the front.

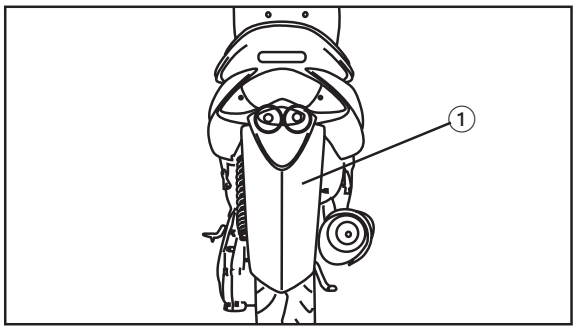

3. Remove:
   - rear fender ①

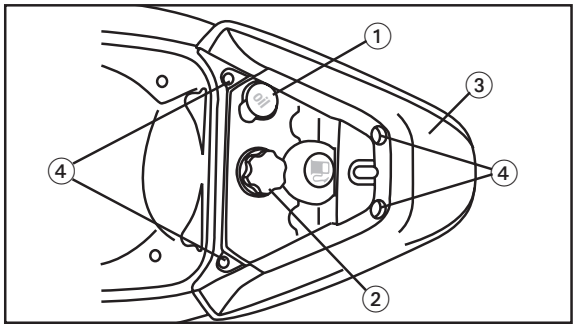

4. Remove:
   - oil tank cap ① and grommet
   - fuel tank cap ② and grommet
   - passenger hand grap bolts and collars ④
   - passenger hand grap ③

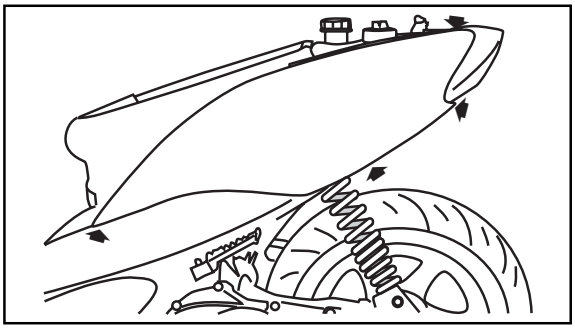

5. Remove:
   - side covers (4 bolts)

NOTE:

Remove carefully the hook between side cover and tail light.

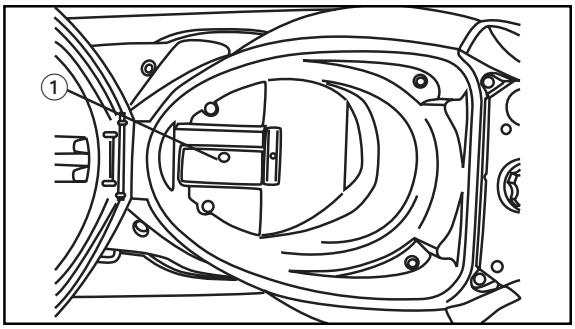

6. Remove:
   - battery cover ①, leads and battery
   - oil tank fixing bolt

NOTE:

Fix the oil tank to the frame with a band.

- helmet box

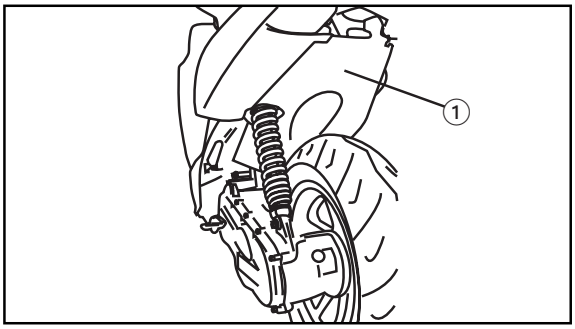

7. Remove:
   - rear mudguard ① (4 bolts)

INSTALLATION
Reverse the removal process.

NOTE:

After installing all plastic parts, check that all hooks are properly attached.

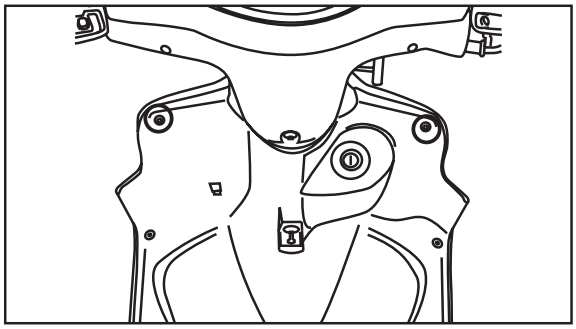

FRONT COWLING AND FOOTREST

REMOVAL

1. Remove:
   - front upper cowling

NOTE:

Disconect front light and indicator light couplers.

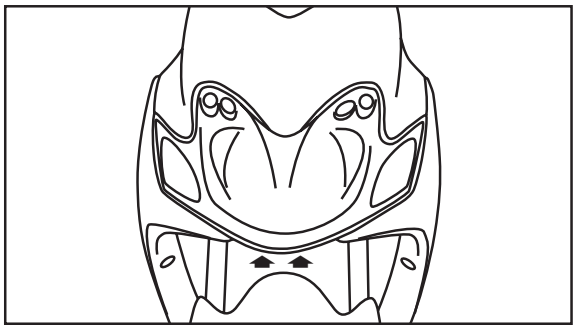

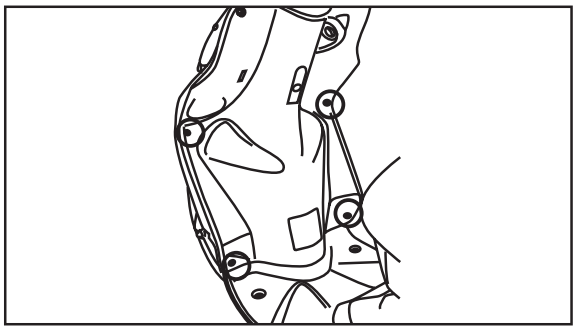

2. Remove:
   - front middle cowling

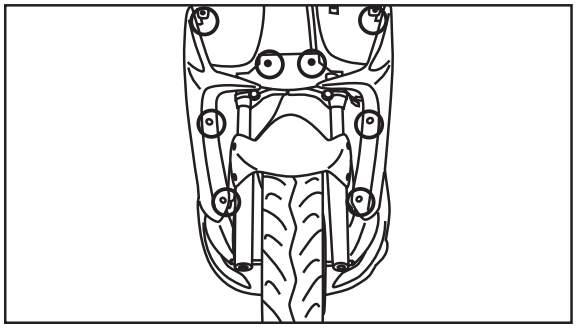

3. Remove:
   - lower cowling

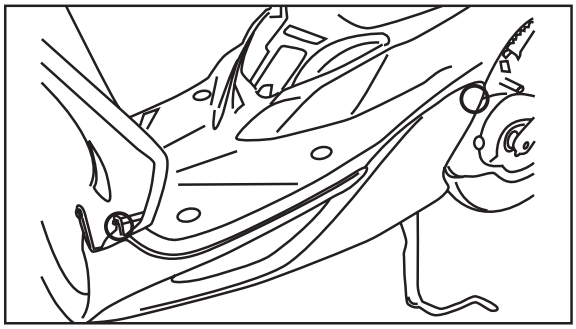

4. Remove:
   - under cowling

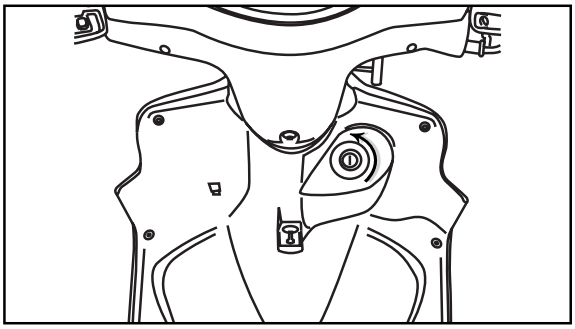

5. Remove:
   - legshield

NOTE:

Remove first the main switch cover

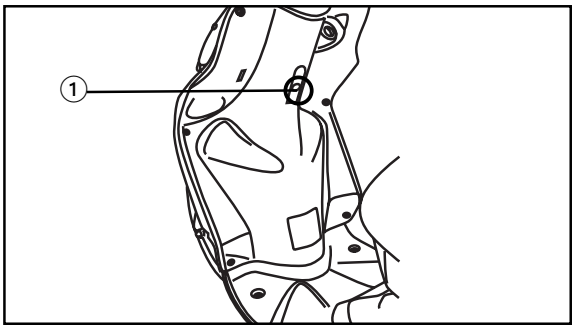

6. Remove:
   - hook bracket 1

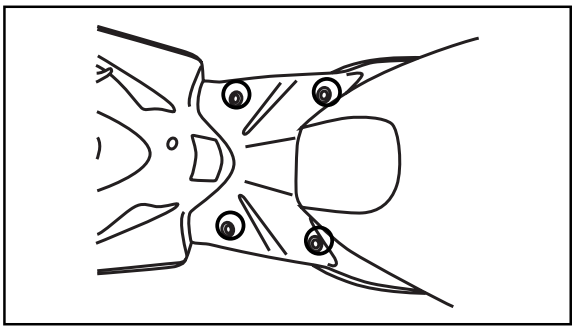

7. Remove:
   - footrest

INSTALLATION

Reverse the removal process

NOTE:

After installing all plastic parts, check that all hooks are properly attached.

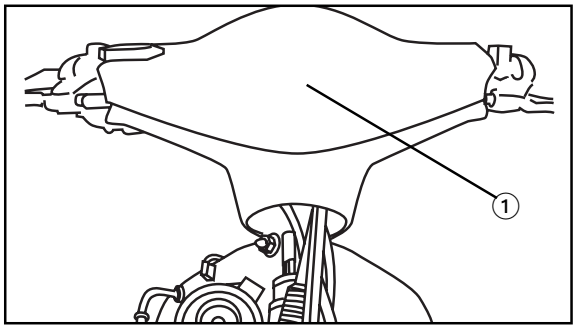

HANDLEBAR COVERS

REMOVAL

1. Remove:
   - upper handlebar cover ①

NOTE:

Disconect panel meter couplers

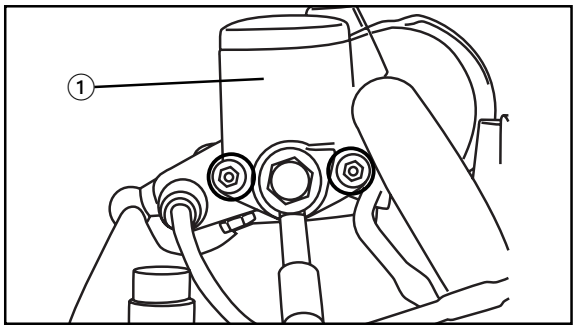

2. Remove:
   - front master cylinder (2 bolts) ①
   - handlebar switch couplers
   - stop switch couplers
   - rear brake wire from lever side
   - throttle wire from throttle grip

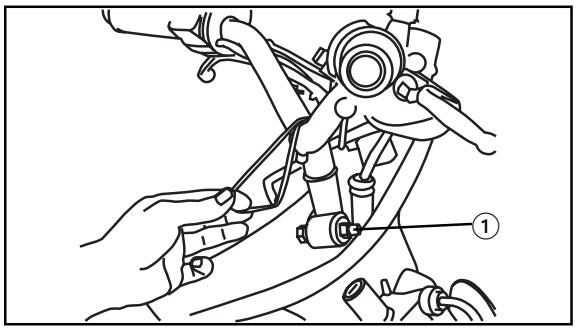

3. Remove:
   - handlebar fixing bolt ①

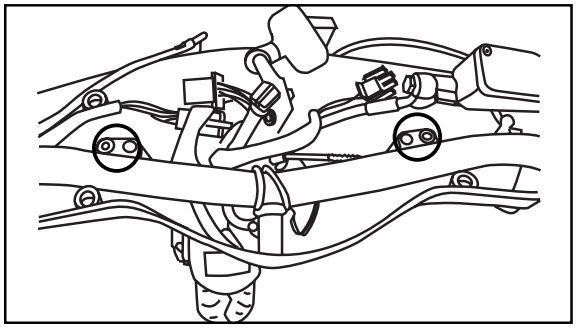

4. Remove:
   - lower handlebar cover bolts

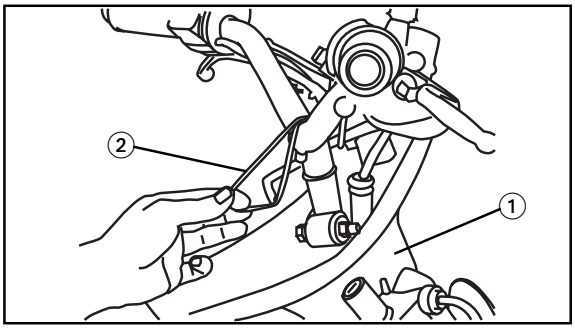

5. Slide dow the lower handlebar cover ①

6. Remove the wiring harness rubber band ② from the handlebar

7. Remove:
   - handlebar
   - lower handlebar cover

INSTALLATION
Reverse the removal process.

NOTE:

- For handlebar installation refer to chapter 7.
- After installing all plastic parts, check that all hooks are properly attached.

ENGINE

EAS00054

ADJUSTING THE ENGINE IDLING SPEED

NOTE:

Prior to adjusting the engine idling speed, the air filter element should be clean, and the engine shoud have adequate compression.

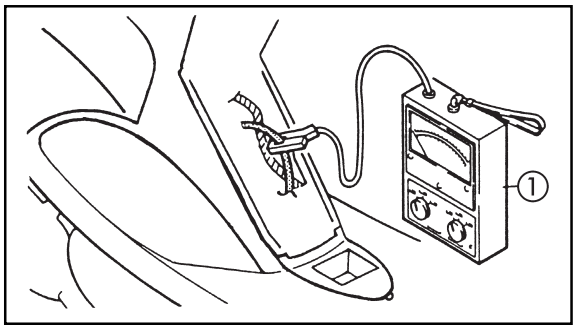

1. Start the engine and let it warm up for several minutes.
2. Connect:
   - engine tachometer ①
     (onto the spark plug lead)

	Engine tachometer **90890-03113**

3. Check:
   - engine idling speed
     Out of specification → Adjust.

	Engine idling speed **1.650 ~ 1.950 r/min**

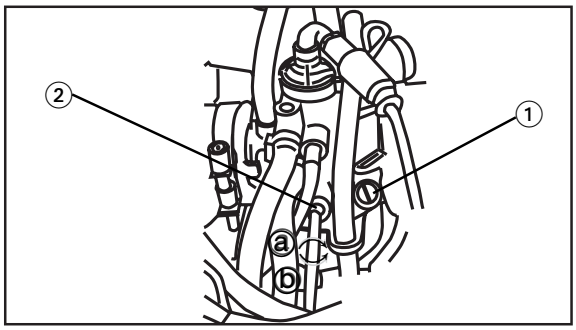

4. Adjust:
   - engine idling speed

▼▼▼▼▼▼▼▼▼▼▼▼▼▼▼▼▼▼▼▼▼▼▼▼▼▼▼▼▼▼▼▼▼▼

a. Remove the center panel.
b. Turn the pilot air screw ① in or out until it is lightly seated.
c. Turn the pilot screw out the specified number of turns.

Pilot air screw setting		
CS50:	**Dellorto**	**2 - 2 1/4**
	Gurtner	**1 3/4 - 2**
CS50Z:	**Dellorto**	**1 3/4 ± 1/8**

d. Turn the throttle stop screw ② in direction ⓐ or ⓑ until the specified engine idling speed is obtained.

Direction ⓐ	**Engine idling speed is increased.**
Direction ⓑ	**Engine idling speed is decreased.**

e. Install the center panel.

▲▲▲▲▲▲▲▲▲▲▲▲▲▲▲▲▲▲▲▲▲▲▲▲▲▲▲▲▲▲▲▲▲▲

5. Adjust:
   - throttle cable free play
     Refer to “ADJUSTING THE THROTTLE CABLE FREE PLAY“

	Throttle cable free play (at the flange of the throttle grip) **2 ~ 5 mm**

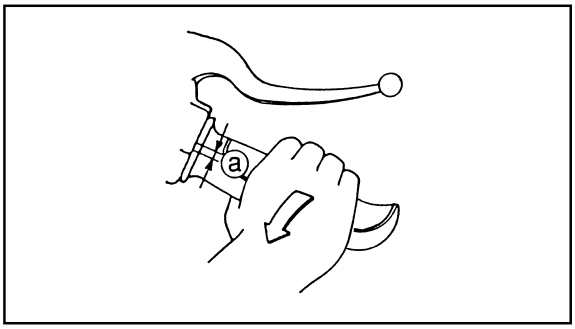

EAS00058

ADJUSTING THE THROTTLE CABLE FREE PLAY

NOTE:

Prior to adjusting the throttle cable free play, the engine idling speed should be adjusted.

1. Check:
   - throttle cable free play ⓐ
     Out of specification → Adjust.

	Throttle cable free play (at the flange of the throttle grip) **2 ~ 5 mm**

2. Remove:
   - center panel
   - grip bar
   - battery
   - right side cover
   - helmet box
     Refer to BODYWORK
3. Adjust:
   - throttle cable free play

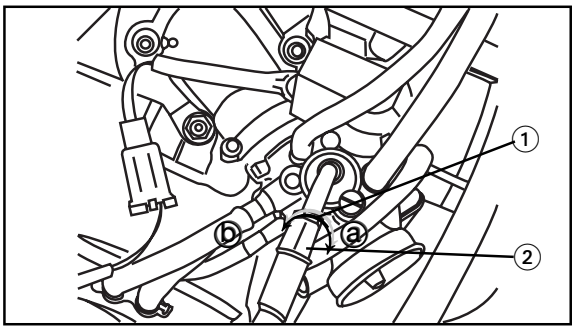

▼▼▼▼▼▼▼▼▼▼▼▼▼▼▼▼▼▼▼▼▼▼▼▼▼▼▼▼▼▼▼▼▼▼

Carburetor side

a. Loosen the locknut ①.
b. Turn the adjusting nut ② in direction ⓐ or ⓑ until the specified throttle cable free play is obtained.

Direction ⓐ	**Throttle cable free play is increased.**
Direction ⓑ	**Throttle cable free play is decreased.**

c. Tighten the locknut.

NOTE:

If the specified throttle cable free play cannot be obtained on the carburetor side of the cable, use the adjusting nut on the handlebar side.

Handlebar side

a. Loosen the locknut ①.
b. Turn the adjusting nut ② in direction ⓐ or ⓑ until the specified throttle cable freey play is obtained.

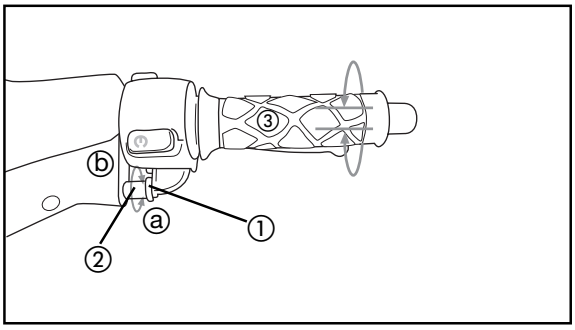

Direction ⓐ	**Throttle cable free play is increased.**
Direction ⓑ	**Throttle cable free play is decreased.**

c. Thighten the loknut.

⚠ WARNING

After adjusting the throttle cable free play, start the engine and turn the handlebar to the right or left to ensure that this does not cause the engine idling speed to change.

▲▲▲▲▲▲▲▲▲▲▲▲▲▲▲▲▲▲▲▲▲▲▲▲▲▲▲▲▲▲▲▲▲▲

EAS00060

CHECKING THE SPARK PLUG

1. Disconnect:
   - spark plug cap
2. Remove:
   - spark plug

CAUTION:

Before removing the spark plug, blow away any dirt accumulated in the spark plug well with compressed air to prevent it from falling into the cylinder.

3. Check:
   - spark plug type
     Incorrect → Change.

	Spark plug type (manufacturer) **BR8HS (NGK)**

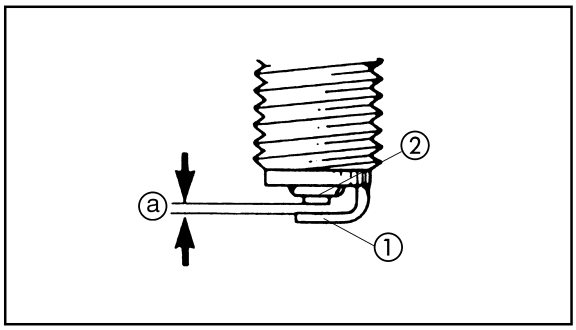

4. Check:
   - electrode ①
     Damage/wear → Replace the spark plug.
   - insulator ②
     Abnormal color → Replace the spark plug.
     Normal color is medium-to light tan.
5. Clean:
   - spark plug
     (with a spark plug cleaner or wire brush)
6. Measure:
   - spark plug gap ⓐ
     (with a wire Thickness gauge)
     Out of specification → Regap.

	Spark plug type (manufacturer) **0,6 ~ 0,7 mm**

7. Install:
   - spark plug

	20 Nm (2.0 m • kg)

NOTE:

Before installing the spark plug, clean the spark plug and gasket surface.

8. Connect:
   - spark plug cap

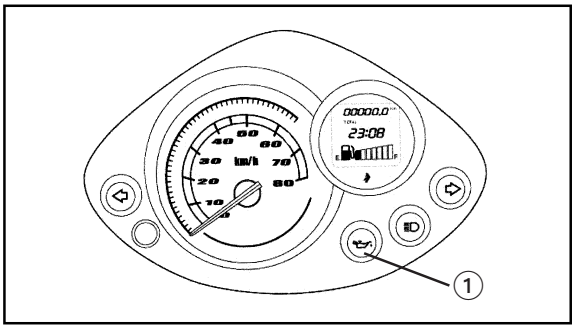

CHECKING THE ENGINE OIL LEVEL

1. Inspect:
   - engine oil level
     Low oil level → Add sufficient oil.

① Oil indicator light "OIL CAUTION"

Visual inspection steps for engine oil level

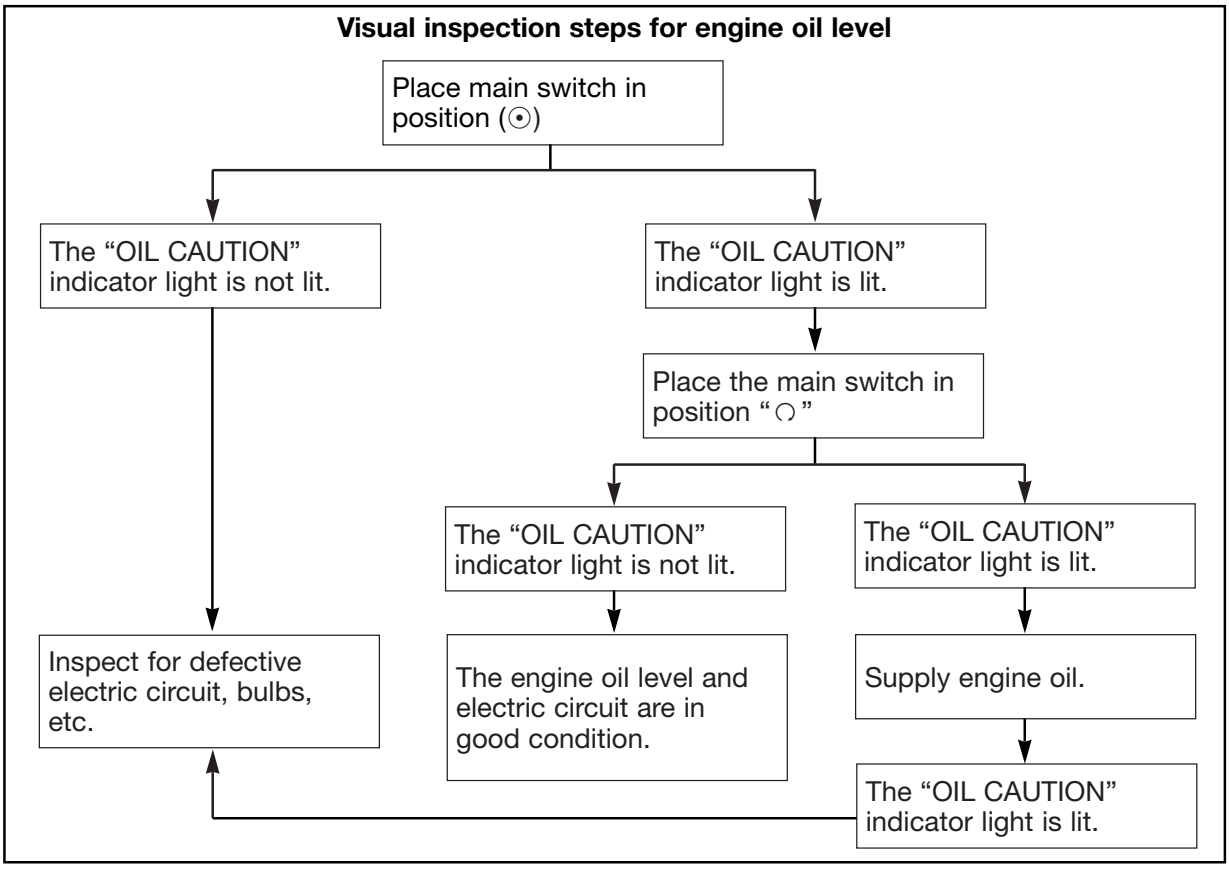

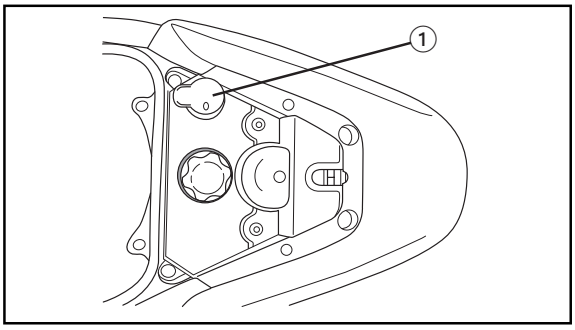

Recommended oil:
YAMAHA 2T 2-stroke engine oil or equivalent
Total:
1.4 L

NOTE:

After filling the oil tank, close it with the cap ① and close the seat.

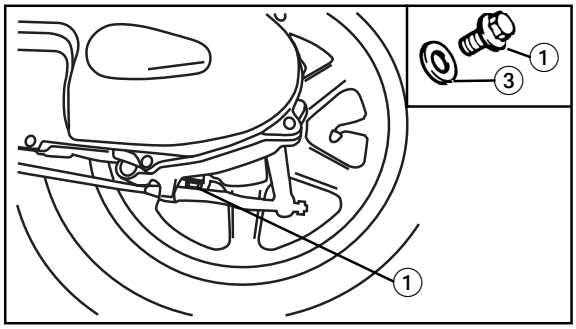

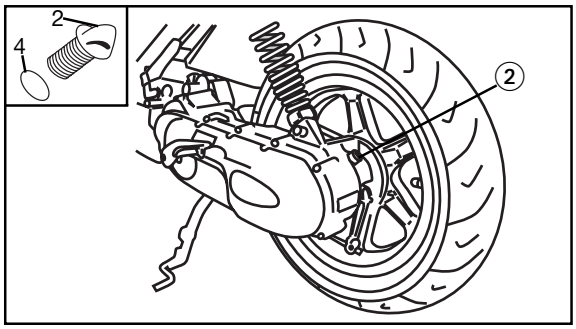

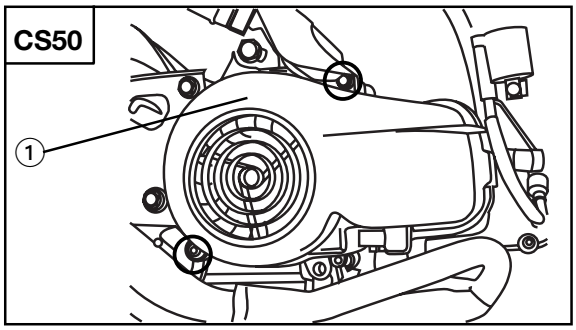

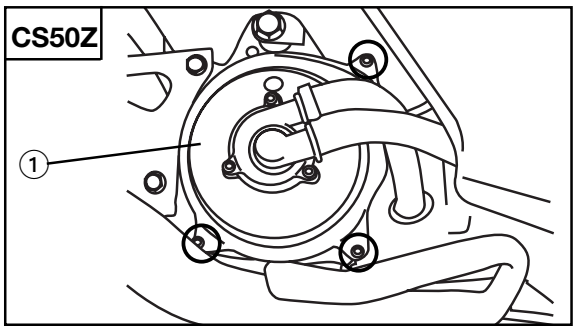

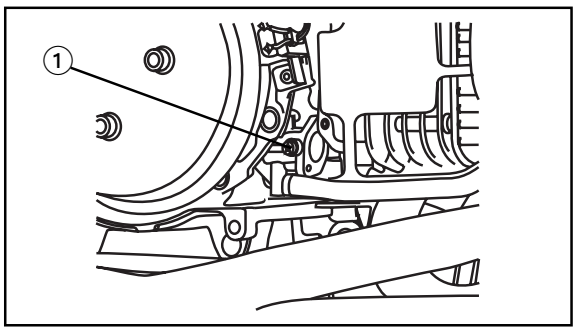

CHANGING THE TRANSMISSION OIL

1. Remove:
   - drain bolt ①
     Drain the transmission oil.
   - oil filler cap ②
2. Inspect:
   - gasket ③ (drain bolt)
   - o-ring ④ (filler cap)
     Damaged → Replace
3. Install:
   - gasket
   - drain bolt

Drain bolt
18 Nm (1.8 m • kg)

4. Fill:
   - transmission case

Transmission oil:
10W30 type SE or higher engine oil or GL gear oil
Capacity:
0,11 L

AUTOLUBE PUMP AIR BLEEDING

The air bleeding must be done always the oil tank is empty, when the intake lube is disconnected or the tank is disassembled.

NOTE:

The air bleeding must be done after filling the oil tank.

1. Remove
   - fan cover ① (CS50)
   - crankcase cover (right) ① (CS50Z)

2. Remove
   - drain screw ①
     Let the oil flow out until the air bubbles have been removed.

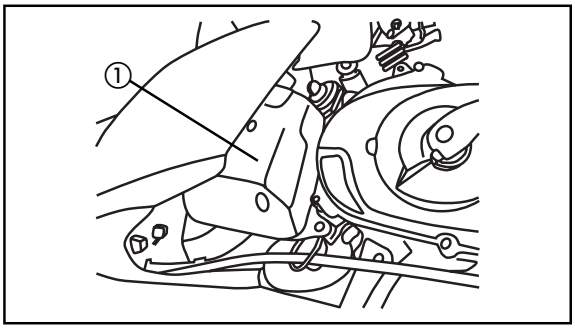

EAS00089

CLEANING THE AIR FILTER ELEMENT

Carburetor side

1. Remove:
   - center cover
   - grip bar
   - battery
   - right side cover
   - helmet box
   - air filter box assembly ①
2. Remove:
   - air filter box cover
   - air filter

CAUTION:

Never start up the engine with the air filter removed. This will allow the entry of unfiltered air, causing rapid wear and possible damage to the engine. Also, using the engine without the filter will affect the carburettor jets resulting in poor performance and the possible overheating of the engine.
Be careful not to block the inlet area of the air filter with cloths or rags.

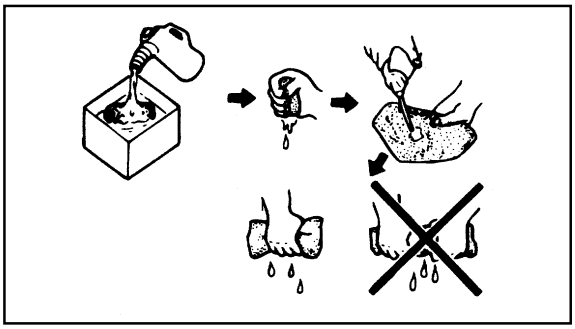

3. Inspect:
   - damaged element → Change
4. Clean:
   - air filter

▼▼▼▼▼▼▼▼▼▼▼▼▼▼▼▼▼▼▼▼▼▼▼▼▼▼▼▼▼▼▼▼▼▼

Steps for cleaning air filter:

- Wash the filter carefully but completely with solvent.

⚠ WARNING

Never use solvents with a low flammability point, such as petrol, to clean the filter. Such solvents may cause fire or explosions.

- Clean off excess solvent from the filter and leave it to dry.

CAUTION:

Do not twist the air filter element when squeezing it.

- Apply oil for foam air filters or YAMAHA 2T engine oil or equivalent oil for 2 stroke engines.
- Wipe off the excess oil.

NOTE:

The filter should be wet but not dripping.

▲▲▲▲▲▲▲▲▲▲▲▲▲▲▲▲▲▲▲▲▲▲▲▲▲▲▲▲▲▲▲▲▲▲

EAS00103

CHECKING THE COOLANT LEVEL (CS50Z only)

1. Stand the scooter on a level surface.

NOTE:

- Place the scooter on a suitable stand.
- Make sure the scooter is upright.

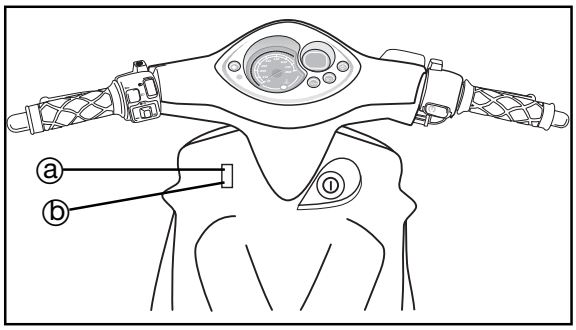

2. Check:
   - coolant level
     The coolant level should be between the maximum level mark ⓐ and minimum level mark ⓑ
     Below the minimum level mark → Remove the front upper cowling and add the recommended coolant to the proper level.

CAUTION:

- **Adding water instead of coolant lowers the antifreeze content of the coolant. If water is used instead of coolant check, and if necessary, correct the antifreeze concentration of the coolant.**
- **Use only distilled water. However, if distilled water is not available, soft water may be used.**

3. Start the engine, warm it up for several minutes, and then turn it off.
4. Check:
   - coolant level

NOTE:

Before checking the coolant level, wait a few minutes until it settles.

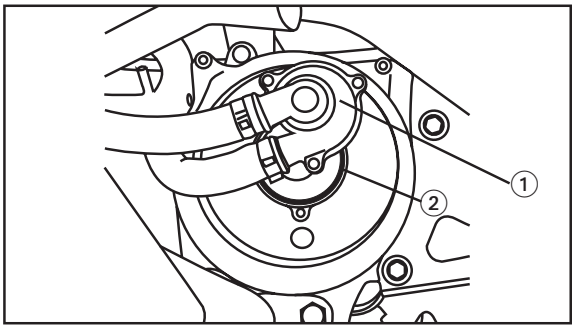

EAS00105

CHANGING THE COOLANT (CS50Z only)

1. Remove:
   - water pump cover ①
   - coolant filler cap

⚠ WARNING

Do not remove the water pump cover when the engine is hot. Scalding hot fluid and steam may be blown out, which could cause serious injury. When the engine has cooled, remove the water pump cover.

2. Drain:
   - coolant
     (from the engine and radiator)

3. Check:
   - o-ring ② (water pump cover)
     Damage → Replace
4. Install:
   - water pump cover

	7 Nm (0.7 m • kg)

5. Fill:
   - coolant reservoir
     (with the specified amount of the recommended coolant)

NOTE:

While start the engine, fill the coolant until specified amount.

Recommended antifreeze
High-quality ethylene glycol antifreeze containing corrosion inhibitors for aluminum engines
Mixing ratio
1:1 (antifreeze: water)
Quantity
Total amount
0,910 L
Coolant reservoir capacity
0,380 L

Handling notes for coolant
Coolant is potentially harmful and should be handled with special care.

WARNING

- **If coolant splashes in your eyes, thoroughly wash them with water and consult a doctor.**
- **If coolant splashes on your clothes, quickly wash it away with water and then with soap and water.**
- **If coolant is swallowed, induce vomiting and get immediate medical attention.**

CAUTION:

- **Adding water instead of coolant lowers the antifreeze content of the coolant. If water is used instead of coolant check, and if necessary, correct the antifreeze concentration of the coolant.**
- **Use only distilled water. However, if distilled water is not available, soft water may be used.**
- **If coolant comes into contact with painted surfaces, immediately wash them with water.**
- **Do not mix different types of antifreeze.**

6. Install:
   - coolant filler cap
7. Warm it up for several minutes, and then stop it.
8. Check:
   - coolant level
     Refer to “CHECKING THE COOLANT LEVEL”.

NOTE:

Before checking the coolant level, wait a few minutes until the coolant has settled.

NOTE:

For a quick air bleeding, lift up the front wheel 1metre with the engine at idle speed.
This will provide a effective and air quick bleeding from the head cylinder to the radiator.

9. Install
   - front upper cowling

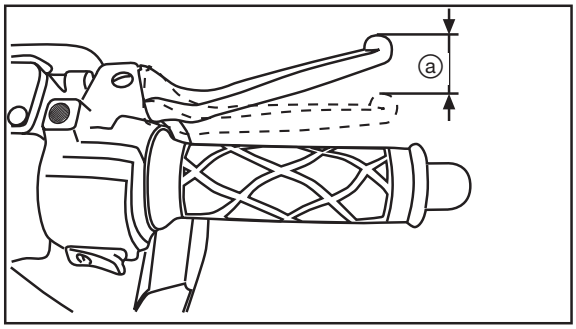

EAS00109

CHASSIS

ADJUSTMENT THE FRONT BRAKE LEVER

1. Check:
   - free play of the front brake lever ⓐ.

Brake lever free play (at the end of the brake lever)
2 ~ 5 mm

⚠ WARNING

The soft or spongy feeling of the brake lever may indicate the presence of air in the brake system. This air should be extracted by bleeding the brake system before using the vehicle. Air in the system will reduce the braking capacity and may cause loss of control and accidents. Inspect and bleed the system if it is necessary.

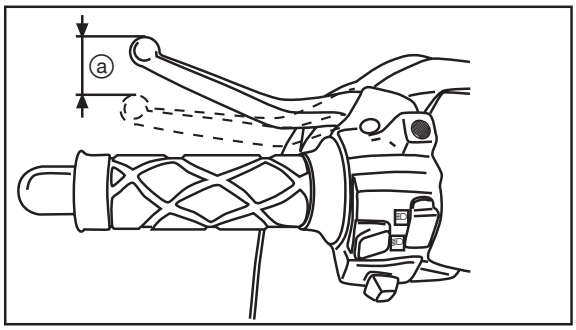

EAS00114

ADJUSTMENT THE REAR BRAKE LEVER

1. Check.
   - free play of rear brake lever ⓐ
     Outside specified value → Adjust

Brake lever free play (at the end of the brake lever)
5 ~ 10 mm

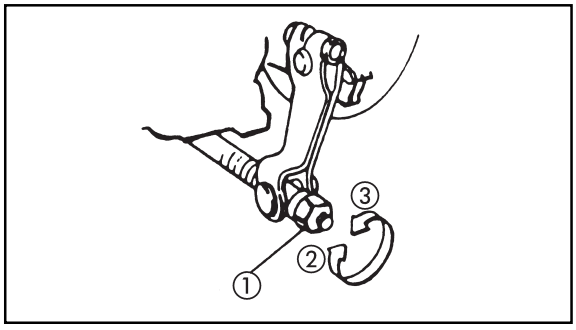

▼▼▼▼▼▼▼▼▼▼▼▼▼▼▼▼▼▼▼▼▼▼▼▼▼▼▼▼▼▼▼▼▼▼

Steps for adjusting the free play of the rear brake lever:

- Turn the adjuster ① inwards ② or outwards ③ until the correct free play is obtained.

▲▲▲▲▲▲▲▲▲▲▲▲▲▲▲▲▲▲▲▲▲▲▲▲▲▲▲▲▲▲▲▲▲▲

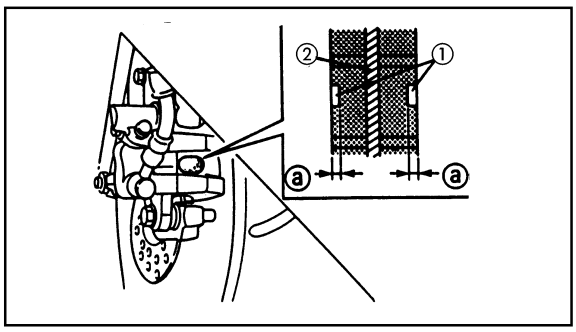

EAS00117

CHECKING THE FRONT BRAKE PADS

1. Inspect:
   - brake pads.
     Wear indicator ① almost contacts with the brake disc ②. Replace the set of brake pads.
     See “CHANGE OF BRAKE PADS” section in chapter 7.

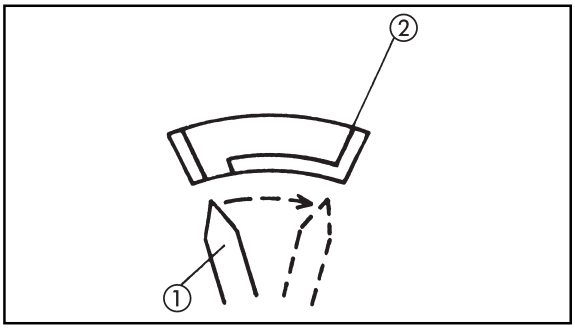

EAS00126

CHECKING THE REAR BRAKE SHOES

1. Activate the brake lever
2. Check:
   - wear indicator ①
     Indicator on wear limit line ② → Replace the brake shoes.

EAS00116

CHECKING THE BRAKE FLUID LEVEL

NOTE:

Place the scooter upright when inspecting the fluid level.

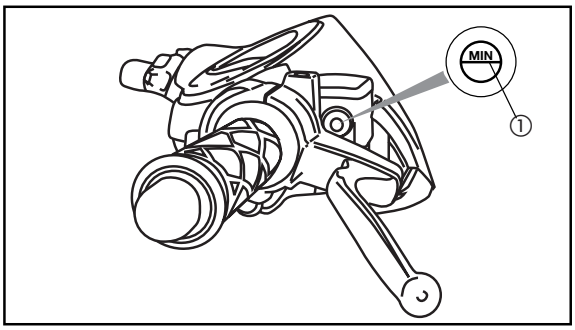

1. Check:
   - brake fluid level.
     The brake fluid level is below the minimum level line ① → Refill up to correct level.

Recommended fluid:
DOT #4

CAUTION:

The fluid may corrode painted surfaces or plastic parts. Always clean any spilt fluid immediately.

WARNING

- **Only use fluid of the designated quality. Otherwise the rubber seals may deteriorate due to leakages and poor performance of the brakes.**
- **Refill with the same type of fluid. The mixture of fluids may cause a damaging chemical reaction which may cause the poor performance of the brakes.**
- **Take care not to let water enter the pump while it is being filled. The water will lower the boiling point of the fluid significantly and may cause a steam blockage.**

EAS00133

BLEEDING THE HYDRAULIC BRAKE SYSTEM

WARNING

Bleed the hydraulic brake system whenever:
- **the system is disassembled.**
- **a brake hose is loosened, disconnected or replace.**
- **the brake fluid level is very low.**
- **brake operation is faulty.**

NOTE:

- Be careful not to spill any brake fluid or allow the brake master cylinder reservoir to overflow.
- When bleeding the hydraulic brake system, make sure there is always enough brake fluid before applying the brake. Ignoring this precaution could allow air to enter the hydraulic brake system, considerably lengthening the bleeding procedure.
- If bleeding is difficult, it may be necessary to let the brake fluid settle for a few hours. Repeat the bleeding procedure when the tiny bubbles in the hose have disappeared.

1. Bleed:
   - brake fluid

▼▼▼▼▼▼▼▼▼▼▼▼▼▼▼▼▼▼▼▼▼▼▼▼▼▼▼▼▼▼▼▼▼▼

Steps for air bleeding:

a. Add the appropriate amount of brake fluid to the sump.
b. Install the diaphragm. Take care not to spill fluid or to let the sump overflow.
c. Connect the clean plastic tube ①.
d. Place the other end of the tube in a container.
e. Slowly apply the brake lever several times.
f. Pull the lever inwards. Keep it in this position.
g. Loosen the bleed screw and tighten the lever as far as it will go.
h. Tighten the bleed screw when it has reached its limit, afterwards loosen the lever.
i. Repeat steps (e) to (h) until the air bubbles in the system have been removed.
j. Add brake fluid to the correct level.

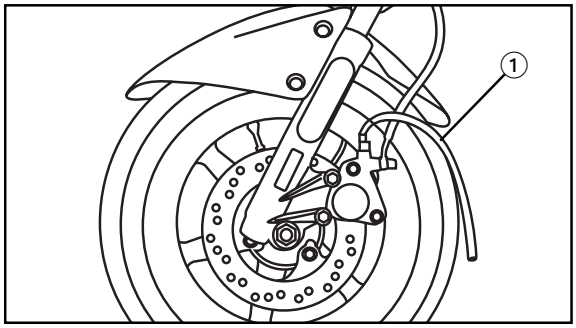

WARNING

After bleeding the hydraulic brake system, check the brake operation.

▲▲▲▲▲▲▲▲▲▲▲▲▲▲▲▲▲▲▲▲▲▲▲▲▲▲▲▲▲▲▲▲▲▲

EAS00148

CHECKING AND ADJUSTING THE STEERING HEAD

1. Stand the scooter on a level surface.

WARNING

Securely support the scooter so that there is no danger of it falling over.

NOTE:

Place the scooter on a suitable stand so that the front wheel is elevated.

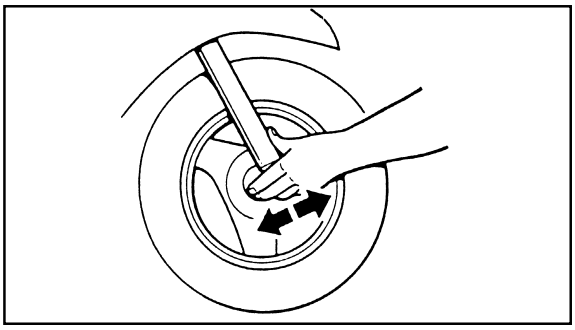

2. Check:
   - steering head
     Grasp the bottom of the front fork legs and gently rock the front fork.
     Blinding/looseness → Adjust the steering head.
3. Remove:
   - front upper cowling
   - front middle cowling
   - legshield
4. Adjust:
   - steering head

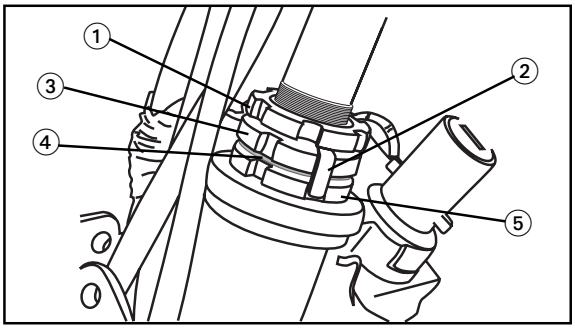

▼▼▼▼▼▼▼▼▼▼▼▼▼▼▼▼▼▼▼▼▼▼▼▼▼▼▼▼▼▼▼▼▼▼

a. Remove the upper ring nut ①, the lock washer ②, the center ring nut ③ and the rubber washer ④.
b. Loosen the lower ring nut ⑤ and then tighten it to specification with the ring nut wrench.
c. Loosen the lower ring nut $^1/_2$ turn counterclockwise then tighten it to specification with a steering nut wrench.

Lower ring nut (initial tightening torque)
38 Nm (3.8 m • kg)

WARNING

Do not overtighten the lower ring nut.

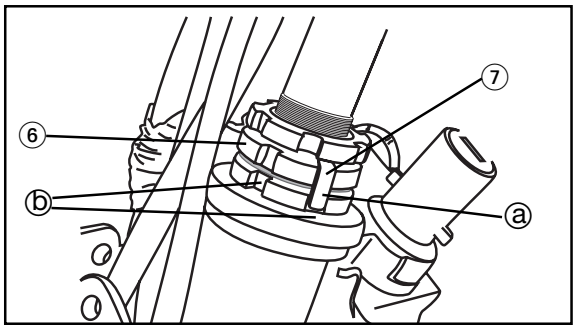

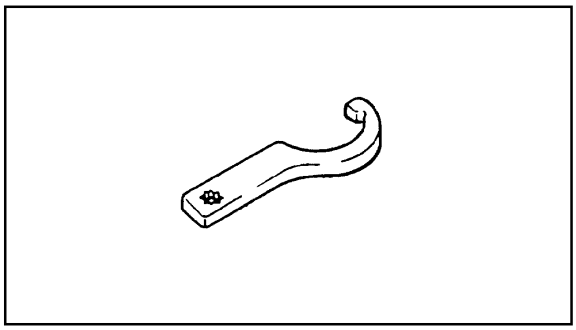

Lower ring nut (final tightening torque)
6.5 Nm (0.65 m • kg)

d. Check the steering head for looseness or binding by turning the front fork all the way in both directions. If any binding is felt, remove the lower bracket and check the upper and lower bearings.
   Refer to “STEERING HEAD” in chapter 7.
e. Install the rubber washer.
f. Install the center ring nut.
g. Finger tighten the center ring nut ⑥, then align the slots of both ring nuts. If necessary, hold the lower ring nut and tighten the center ring nut until their slots are aligned.
h. Install the lock washer ⑦.

NOTE:

Make sure the lock washer tabs ⓐ sit correctly in the ring nut slots ⓑ.

i. Hold the lower and center ring nuts with a ring nut wrench and tighten the upper ring nut with a steering nut wrench.

Steering/Ring nut wrench
90890-01403

Upper ring nut
75Nm (7.5 m • kg)

▲▲▲▲▲▲▲▲▲▲▲▲▲▲▲▲▲▲▲▲▲▲▲▲▲▲▲▲▲▲▲▲▲▲

5. Install:
   - legshield
   - front middle cowling
   - front upper cowling

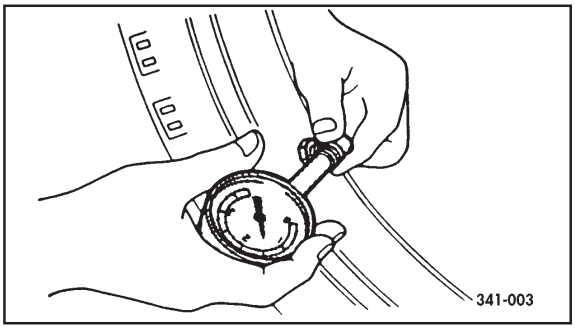

EAS00163

CHECKING THE TIRES

1. Measure:
   - air pressure
     Outside specified value → Adjust

Maximum load*:	158.3 kg (CS50Z) 161.5 kg (CS50)	
Pressure cold	Front	Rear
Up to 90 kg	175kpa. (1.75kg/cm^2)	200kpa. (2.0kg/cm^2)
90 kg to maximum load	175kpa. (1.75kg/cm^2)	225kpa. (2.25kg/cm^2)

* Total weight of rider, passenger, cargo and accessories

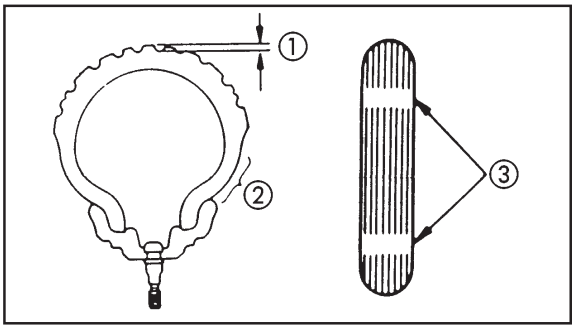

2. Inspect:
   - tyre surface
     Worn/Damaged → Change

Minimum depth of thread of tyres 0.8 mm

① Thread depth
② Side wall
③ Wear indicator

EAS00168

CHECKING THE WHEELS

The following procedure applies to both of the wheels.

1. Check:
   - wheel
     Damage/out-of-round → Replace.

WARNING

Never attempt to make any repairs to the wheel.

NOTE:

After a tire or wheel has been changed or replaced, always balance the wheel.

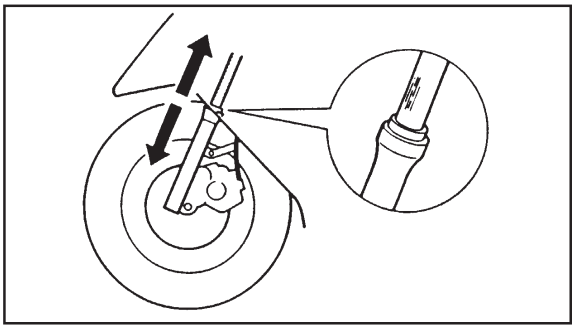

EAS00151

CHECKING THE FRONT FORK

1. Inspect:
   - front fork
     Bent/Damaged → Fork bar → Change
     Oil leaks → Seals → Replace
     Rough operation → Fork assembly → Replace

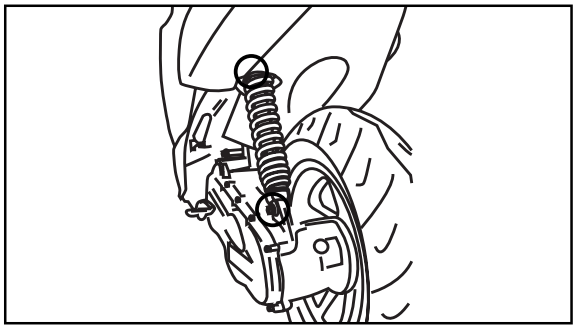

REAR SHOCK ABSORBER INSPECTION

1. Inspect:
   - rear shock absorber
     Oil leaks/Damage → Replace
2. Check
   - tightening torque

	Upper (nut)	**31.5 Nm (3.15 m • kg)**
	Lower (bolt)	**17.5 Nm (1.75 m • kg)**

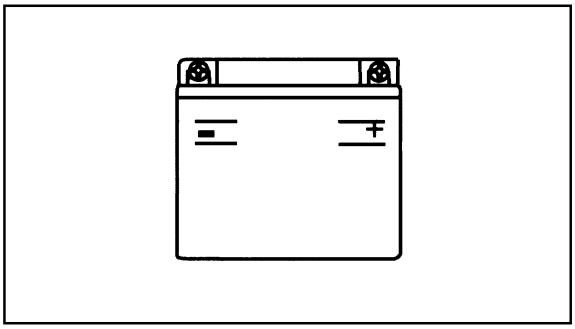

EAS00179

ELECTRICAL SYSTEM

CHECKING AND CHARGING THE BATTERY

WARNING

Batteries generate explosive hydrogen gas and contain electrolyte which is made of poisonous and highly caustic sulfuric acid. Therefore, always follow these preventive measures:

- **Wear protective eye gear when handling or working near batteries.**
- **Charge batteries in a well-ventilated area.**
- **Keep batteries away from fire, sparks or open flames (e.g., welding equipment, lighted cigarettes).**
- **DO NOT SMOKE when charging or handling batteries.**
- **KEEP BATTERIES AND ELECTROLYTE OUT OF REACH OF CHILDREN.**
- **Avoid bodily contact with electrolyte as it can cause severe burns or permanent eye injury.**

FIRST AID IN CASE OF BODILY CONTACT:
EXTERNAL

- **Skin — Wash with water.**
- **Eyes — Flush with water for 15 minutes and get immediate medical attention.**

INTERNAL

- **Drink large quantities of water or milk followed with milk of magnesia, beaten egg or vegetable oil. Get immediate medical attention.**

CAUTION:

- **This is a sealed battery. Never remove the sealing caps because the balance between cells will not be maintained and battery performance will deteriorate.**
- **Charging time, charging amperage and charging voltage for an MF battery are different from those of conventional batteries. The MF battery should be charged as explained in the charging method illustrations. If the battery is overcharged, the electrolyte level will drop considerably. Therefore, take special care when charging the battery.**

Downloaded from www.Manualslib.com manuals search engine

NOTE:

Since MF batteries are sealed, it is not possible to check the charge state of the battery by measuring the specific gravity of the electrolyte. Therefore, the charge of the battery has to be checked by measuring the voltage at the battery terminals.

1. Remove:
   - battery cover

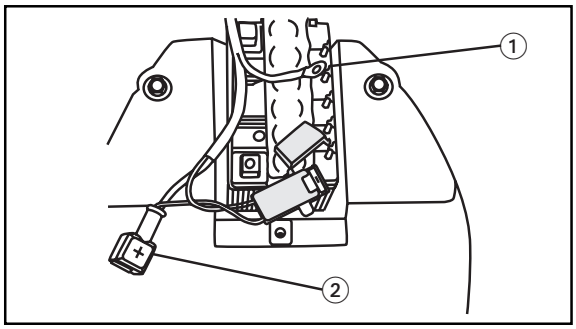

2. Disconnect:
   - battery leads
     (from the battery terminals)

CAUTION:

First, disconnect the negative battery lead ①, and then the positive battery lead ②.

3. Remove:
   - battery
4. Check:
   - battery charge

▼▼▼▼▼▼▼▼▼▼▼▼▼▼▼▼▼▼▼▼▼▼▼▼▼▼▼▼▼▼▼▼▼▼

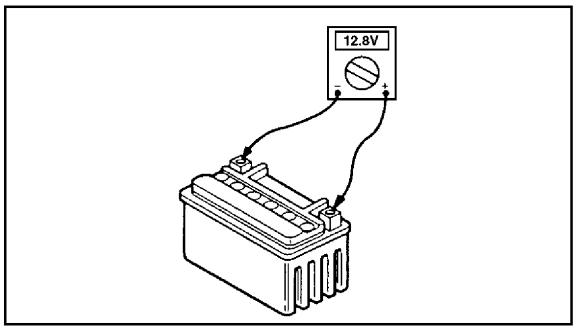

a. Connect a pocket tester to the battery terminals.

Positive tester probe →	**positive battery terminal**
Negative tester probe →	**negative battery terminal**

NOTE:

- The charge state of an MF battery can be checked by measuring its open-circuit voltage (i.e., the voltage when the positive terminal is disconnected).
- No charging is necessary when the open-circuit voltage equals or exceeds 12.8 V.

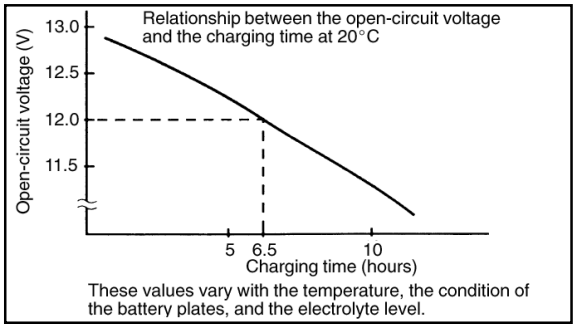

b. Check the charge of the battery, as shown in the charts and the following example.

Example

c. Open-circuit voltage = 12.0 V

d. Charging time = 6.5 hours

e. Charge of the battery = 20 ~ 30%

▲▲▲▲▲▲▲▲▲▲▲▲▲▲▲▲▲▲▲▲▲▲▲▲▲▲▲▲▲▲▲▲▲▲

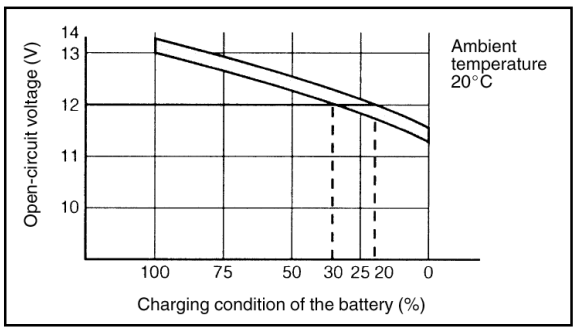

Downloaded from www.Manualslib.com manuals search engine

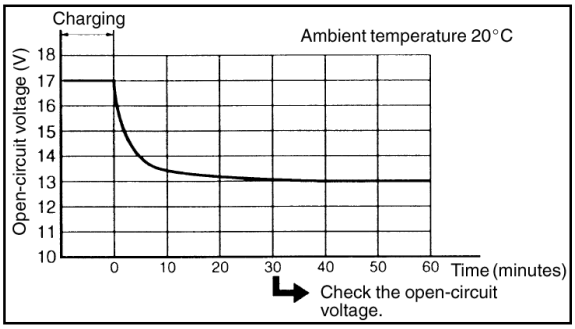

5. Charge:
   - battery
     (refer to the appropriate charging method illustration)

WARNING

Do not quick charge a battery.

CAUTION:

- **Never remove the MF battery sealing caps.**
- **Do not use a high-rate battery charger since it forces a high-amperage current into the battery quickly and can cause battery overheating and battery plate damage.**
- **If it is impossible to regulate the charging current on the battery charger, be careful not to overcharge the battery.**
- **When charging a battery, be sure to remove it from the scooter. (If charging has to be done with the battery mounted on the scooter, disconnect the negative battery lead from the battery terminal.)**
- **To reduce the chance of sparks, do not plug in the battery charger until the battery charger leads are connected to the battery.**
- **Before removing the battery charger lead clips from the battery terminals, be sure to turn off the battery charger.**
- **Make sure the battery charger lead clips are in full contact with the battery terminal and that they are not shorted. A corroded battery charger lead clip may generate heat in the contact area and a weak clip spring may cause sparks.**
- **If the battery becomes hot to the touch at any time during the charging process, disconnect the battery charger and let the battery cool before reconnecting it. Hot batteries can explode!**
- **As shown in the following illustration, the open-circuit voltage of an MF battery stabilizes about 30 minutes after charging has been completed. Therefore, wait 30 minutes after charging is completed before measuring the open-circuit voltage.**

Downloaded from www.Manualslib.com manuals search engine

Charging method using a variable-current (voltage) charger

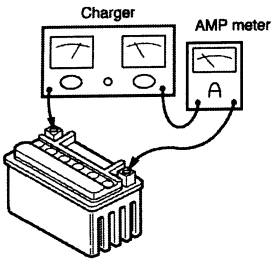

Measure the open-circuit voltage prior to charging.

NOTE:
Voltage should be measured 30 minutes after the machine is stopped.

Connect a charged and AMP meter to the battery and start charging.

NOTE:
Set the charging voltage at 16 ~ 17 V. (If the setting is lower, charging will be insufficient. If too high, the battery will be over-charged.)

Make sure that the current is higher than the standard charging current written on the battery.

YES

NO

By turning the charging voltage adjust dial, set the charging voltage at 20 ~ 24 V.

Monitor the amperage for 3 ~ 5 minutes to check if the standard charging current is reached.

YES

Adjust the voltage so that the current is at the standard charging level.

NO

If the current does not exceed the standard charging current after 5 minutes, replace the battery.

Set the time according to the charging time suitable for the open-circuit voltage.
Refer to “Battery condition checking steps.

If charging requires more than 5 hours, it is advisable to check the charging current after a lapse of 5 hours. If there is any change in the amperage, readjust the voltage to obtain the standard charging current.

Measure the battery open-circuit voltage after leaving the battery unused for more than 30 minutes.
12.8 V or more --- Charging is complete.
12.7 V or less --- Recharging is required.
Under 12.0 V --- Replace the battery

Downloaded from www.Manualslib.com manuals search engine

Charging method using a constant voltage charger

Measure the open-circuit voltage prior to charging.

NOTE:
Voltage should be measured 30 minutes after the machine is stopped.

↓

Connect a charged and AMP meter to the battery and start charging.

↓

Make sure that the current is higher than the standard charging current written on the battery.

YES →

Charge the battery until the battery's charging voltage is 15 V.

NOTE:
Set the charging time at 20 hours (maximum).

↓

Measure the battery open-circuit voltage after leaving the battery unused for more than 30 minutes.
12.8 V or more --- Charging is complete.
12.7 V or less --- Recharging is required.
Under 12.0 V --- Replace the battery.

NO →

This type of battery charger cannot charge the MF battery. A variable voltage charger is recommended.

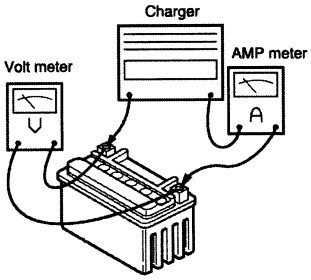

Downloaded from www.Manualslib.com manuals search engine

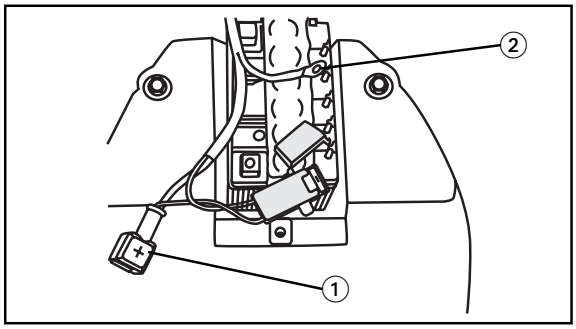

6. Install:
   - battery
7. Connect:
   - battery leads
     (to the battery terminals)

CAUTION:

First, connect the positive battery lead ①, and then the negative battery lead ②.

8. Check:
   - battery terminals
     Dirt → Clean with a wire brush.
     Loose connection → Connect properly.
9. Lubricate:
   - battery terminals

	Recommended lubricant **Dielectric grease**

10. Install:
    - battery cover

EAS00181

CHECKING THE FUSE

1. Remove:
   - the battery cover
     See the "FRONT BODYWORK" section
2. Inspect:
   - fuse ①
     Defective → Replace

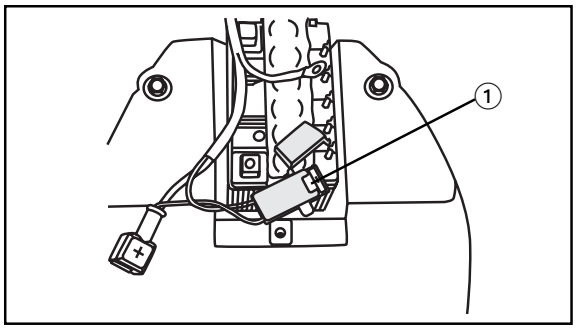

▼▼▼▼▼▼▼▼▼▼▼▼▼▼▼▼▼▼▼▼▼▼▼▼▼▼▼▼▼▼▼▼▼▼

Steps to be taken for blown fuses:
- Disconnect the ignition and circuit.
- Install a new fuse of the correct amperage.
- Connect the switches to check the correct operation of the electrical device.
- If the fuse blows immediately after, check the circuit concerned.

▲▲▲▲▲▲▲▲▲▲▲▲▲▲▲▲▲▲▲▲▲▲▲▲▲▲▲▲▲▲▲▲▲▲

WARNING

Do not use fuses of a higher amperage than that recommended. This can cause extensive damage to the electrical system and fire.

Description	Amperage	Quantity
Principal	7.5 A	1

Downloaded from www.Manualslib.com manuals search engine

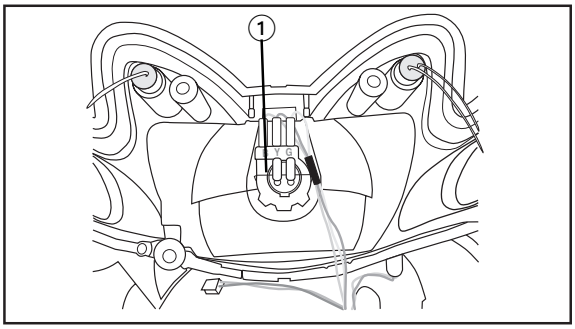

EAS00182

REPLACING THE HEADLIGHT BULB

1. Remove:
   - front upper cowling
2. Remove:
   - headlight bulb holder ①
3. Remove:
   - headlight bulb

WARNING

Since the headlight bulb gets extremely hot, keep flammable products and your hands away from the bulb until it has cooled down.

4. Install:
   - headlight bulb NEW
     Secure the new headlight bulb with the headlight bulb holder.

CAUTION:

Avoid touching the glass part of the headlight bulb to keep it free from oil, otherwise the transparency of the glass, the life of the bulb and the luminous flux will be adversely affected. If the headlight bulb gets soiled, thoroughly clean it with a cloth moistened with alcohol or lacquer thinner.

5. Install:
   - headlight bulb holder
6. Install:
   - front upper cowling

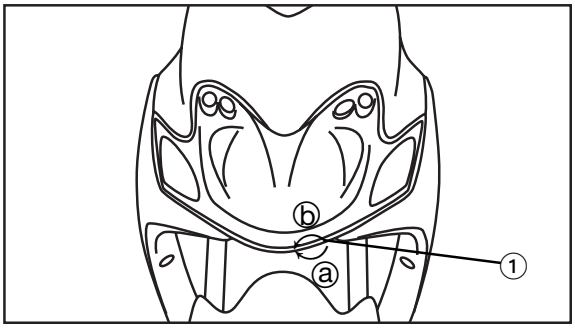

EAS00186

ADJUSTING THE HEADLIGHT BEAM

1. Adjust:
   - headlight beam (vertically)

▼▼▼▼▼▼▼▼▼▼▼▼▼▼▼▼▼▼▼▼▼▼▼▼▼▼▼▼▼▼▼▼▼▼▼▼▼▼

a. Turn the adjusting screw ① in direction ⓐ or ⓑ.

Direction ⓐ	**Headlight beam is raised.**
Direction ⓑ	**Headlight beam is lowered.**

▲▲▲▲▲▲▲▲▲▲▲▲▲▲▲▲▲▲▲▲▲▲▲▲▲▲▲▲▲▲▲▲▲▲▲▲▲▲

Downloaded from www.Manualslib.com manuals search engine

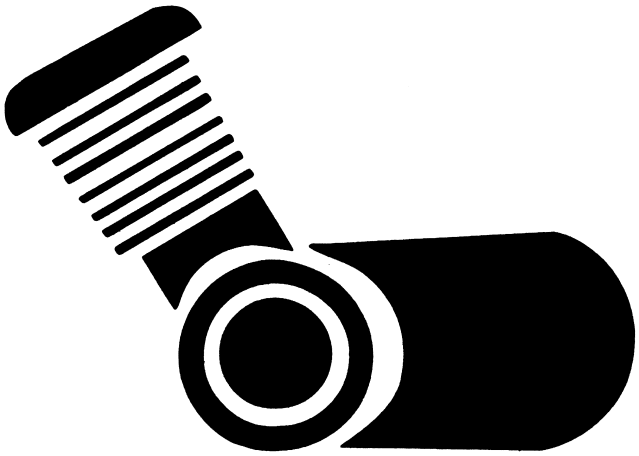

ENG 4

Downloaded from www.Manualslib.com manuals search engine

CHAPTER 4
ENGINE

ENGINE REMOVAL 4-1
COVER REMOVAL 4-1
COOLING SYSTEM (CS50Z only) 4-1
CABLES, LEADS AND HOSES 4-1
ENGINE REMOVAL 4-2

ENGINE DISASSEMBLY 4-3
REMOVING THE REAR WHEEL 4-3
REMOVING THE CYLINDER HEAD AND CYLINDER 4-3
REMOVING THE PISTON PIN AND PISTON 4-3
REMOVING THE KICKSTARTER SYSTEM 4-4
REMOVING THE PRIMARY SHEAVE 4-5
DISASSEMBLING THE SECONDARY SHEAVE 4-6
REMOVING THE STARTER SYSTEM 4-7
TRANSMISSION 4-7
DC-CDI MAGNETO 4-8
AUTOLUBE OIL PUMP 4-9
REMOVING THE CENTERSTAND 4-9
DISASSEMBLING THE CRANKCASE AND CRANKSHAFT 4-9

INSPECTION AND REPAIR 4-11
CHECKING THE CYLINDER HEAD 4-11
CHECKING THE CYLINDER AND PISTON 4-12
CHECKING THE PISTON RINGS 4-14
CHECKING THE PISTON PIN AND PISTON PIN BEARING 4-15
CHECKING THE KICKSTARTER 4-16
TRANSMISSION 4-16
AUTOLUBE OIL PUMP 4-17
CHECKING THE CRANKSHAFT 4-17
CHECKING THE BEARINGS 4-18
CHECKING THE PRIMARY SHEAVE 4-18
CHECKING THE SECONDARY SHEAVE 4-19
CHECKING THE V-BELT 4-20
STARTER CLUTCH AND GEARS 4-21

ENGINE ASSEMBLY AND ADJUSTMENT 4-22
CRANKSHAFT AND CRANKCASE 4-22
INSTALLING THE CRANKSHAF 4-23
AUTOLUBE OIL PUMP AND DC-CDI MAGNETO 4-24
INSTALLING THE AUTOLUBE OIL PUMP 4-25
INSTALLING THE DC-CDI MAGNETO 4-25
TRANSMISSION 4-27
INSTALLING THE TRANSMISSION 4-28
STARTER SYSTEM 4-29
INSTALLING THE STARTER SYSTEM 4-30
PRIMARY AND SECONDARY SHEAVE 4-31
KICKSTARTER 4-32
ASSEMBLING THE SECONDARY SHEAVE 4-33
ASSEMBLING THE PRIMARY SHEAVE 4-34
INSTALLING THE KICKSTARTER 4-36
PISTON, CYLINDER AND CYLINDER HEAD (CS50) 4-37
PISTON, CYLINDER AND CYLINDER HEAD (CS50Z) 4-38
PISTON AND PISTON PIN 4-39
CYLINDER AND CYLINDER HEAD 4-39
ENGINE REMOUNTING 4-41

Downloaded from www.Manualslib.com manuals search engine

ENGINE

ENGINE REMOVAL

COVER REMOVAL

1. Remove:
   - center cover
   - helmet box
     Refer to “REAR BODYWORK, MUD-GUARD” in chapter 3.

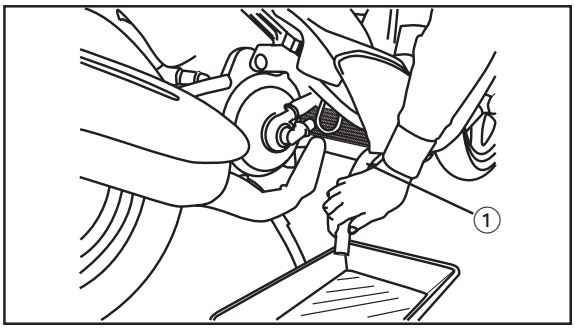

COOLING SYSTEM (CS50Z only)

1. Disconnect:
   - coolant hose ① (on water pump cover)
     Drain the coolant
   - coolant hose (on cylinder head)

CABLES, LEADS AND HOSES

1. Loosen:
   - rear axle nut
2. Disconnect:
   - rear brake cable
3. Disconnect:
   - starter motor leads (positive/negative leads)

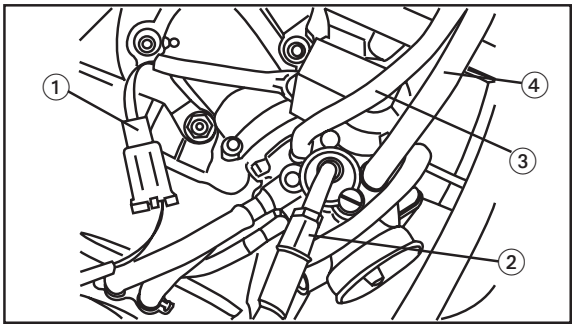

4. Disconnect:
   - DC-CDI magneto lead
   - spark plug cap
   - temperature sensor lead on the cylinder head
   - autochoke lead ①
   - throttle cable (with throttle valve) ②
   - vaccum hose ③
   - fuel hose ④

5. Disconnect:
   - oil hose delivery (oil tank-oil pump)

Downloaded from www.Manualslib.com manuals search engine

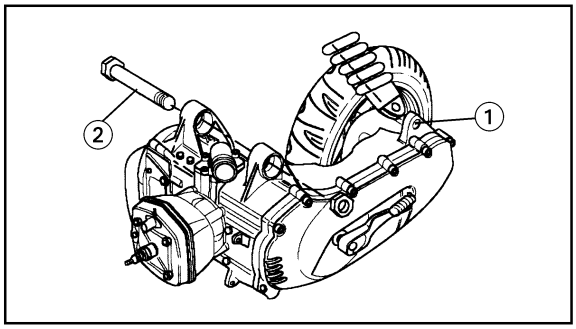

ENGINE REMOVAL

1. Place a suitable stand under the frame.

2. Remove:
   - rear shock absorber bolt (lower) ①
   - engine mounting bolt ②

3. Remove:
   - engine

NOTE:

Lift up the frame and remove the engine.

4. Place the frame on a suitable stand.

Downloaded from www.Manualslib.com manuals search engine

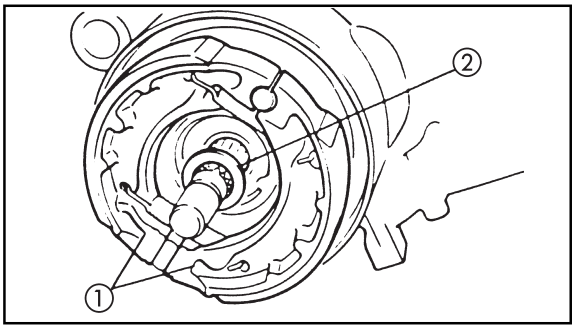

ENGINE DISASSEMBLY

REMOVING THE REAR WHEEL

1. Remove:
   - rear wheel
     Refer to “REMOVING THE REAR WHEEL” in chapter 7
   - brake shoes ①
   - flat washer ②

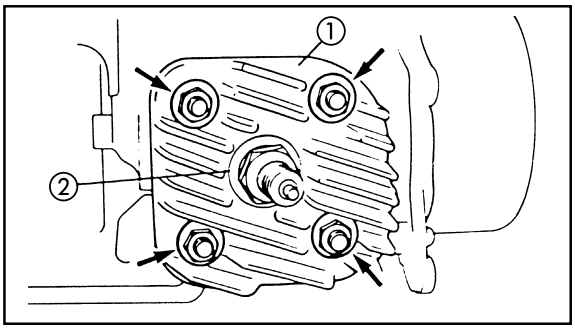

EAS00222

REMOVING THE CYLINDER HEAD AND CYLINDER

1. Remove:
   - cylinder covers (CS50 only)
   - carburator coolant hoses (CS50Z only)
   - cylinder head ①
   - cylinder head gasket

NOTE:

- Before loosening the cylinder head, loosen the spark plug ②.
- The position nuts of the cylinder head should be loosened by 1/2 a turn each time and then removed.

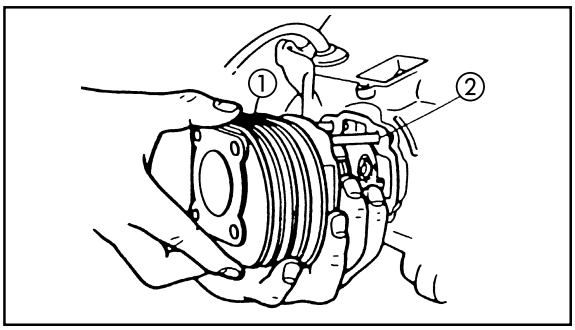

2. Remove:
   - coolant hose (on cylinder) (CS50Z only)
   - cylinder ①
   - cylinder gasket ②

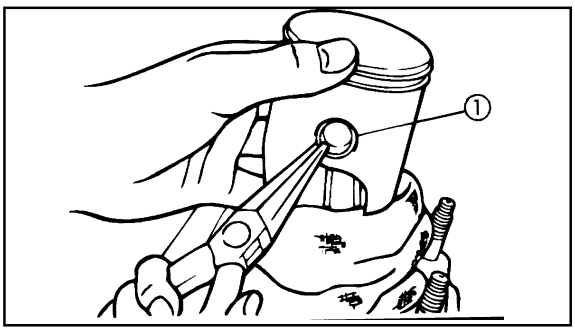

REMOVING THE PISTON PIN AND PISTON

1. Remove:
   - piston pin clip ①

NOTE:

Before removing the piston pin clip, cover the crankcase with a clean cloth so that it does not accidentally fall into the crankcase.

Downloaded from www.Manualslib.com manuals search engine

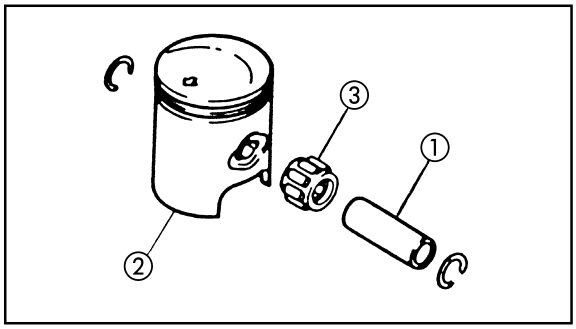

2. Remove:
   - piston pin ①
   - piston ②
   - piston pin bearing ③

CAUTION:

Do not use a hammer to take out the piston pin.

REMOVING THE KICKSTARTER SYSTEM

1. Remove:
   - clamp (air filter)
   - air filter

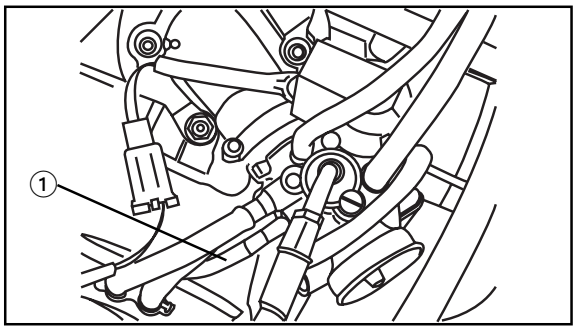

2. Remove:
   - oil hose delivery ①
   - carburator

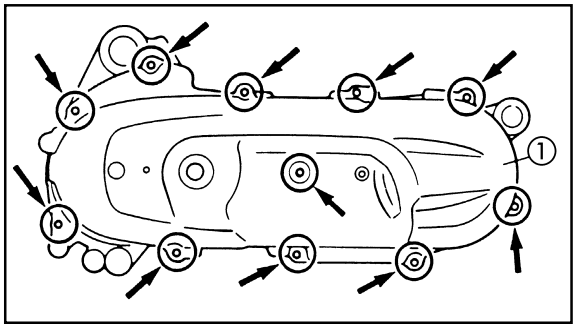

3. Remove:
   - kick crank
   - crankcase cover ① (left)

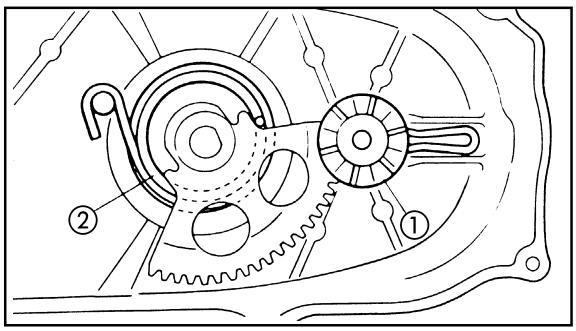

4. Remove:
   - kick pinion gear ①

NOTE:

When the kick pinion gear removed, move the pedal axle.

5. Unhook:
   - return spring ②

Downloaded from www.Manualslib.com manuals search engine

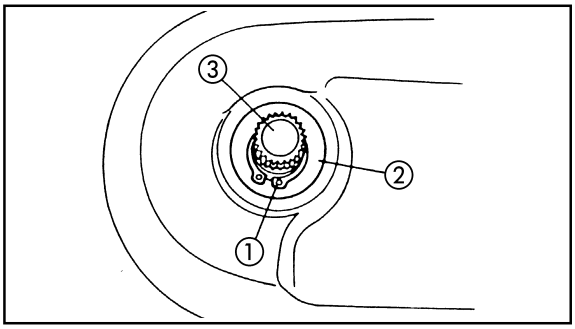

6. Remove:
   - circlip ①
   - flat washer ②
   - kick shaft ③

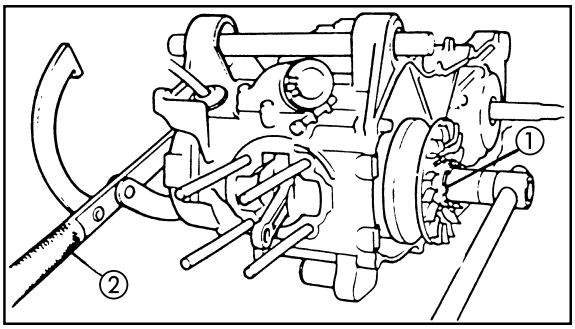

EAS00317

REMOVING THE PRIMARY SHEAVE

1. Remove:
   - fan (CS50 only)
   - right cranckcase cover (CS50Z only)
2. Remove:
   - nut ① (primary sheave)

NOTE:

To loos nut (primary sheave), support the magnetic flywheel using Fly wheel holder ②.

	Fly wheel holder **90890-01235**

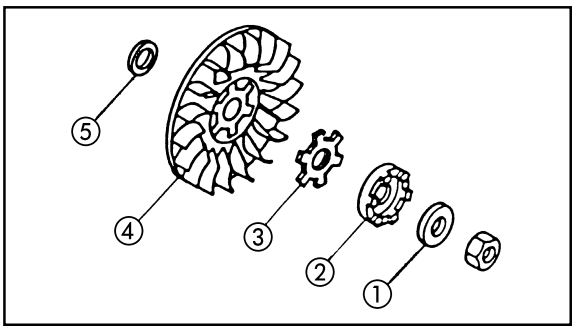

3. Remove:
   - conical spring washer ①
   - one-way clutch ②
   - special washer ③
   - fixed primary sheave ④
   - shim ⑤
   - v-belt

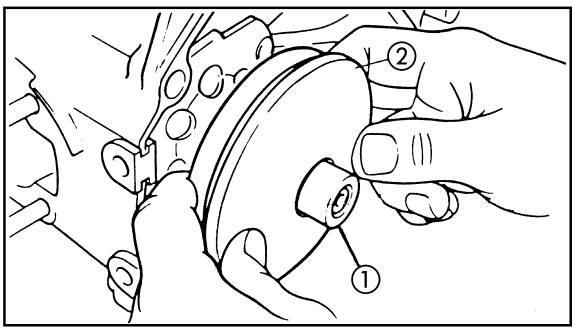

4. Remove:
   - hub ①
   - primary sheave assembly ②

Downloaded from www.Manualslib.com manuals search engine

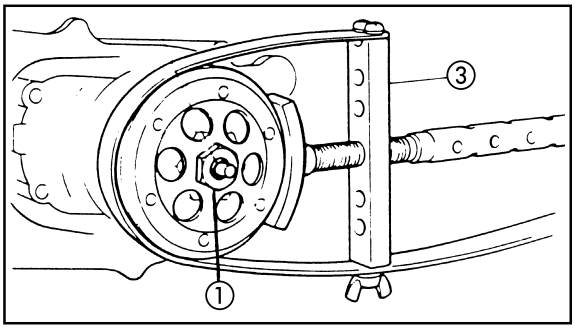

EAS00319

DISASSEMBLING THE SECONDARY SHEAVE

1. Remove:
   - nut ① (secondary sheave)

NOTE:

Hold the secondary sheave with a sheave holder ③ to loosen the nut.

	Sheave holder **90870-01701**

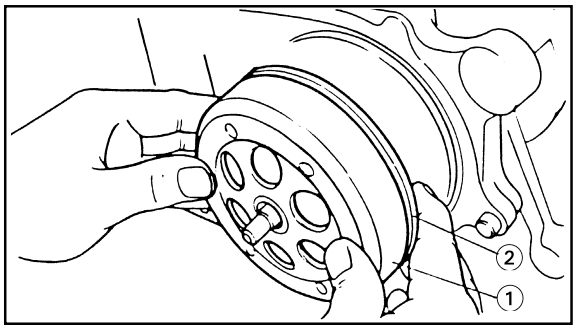

2. Remove:
   - clutch drum ①
   - secondary sheave ②
   - crankcase cover gasket
   - dowel pins

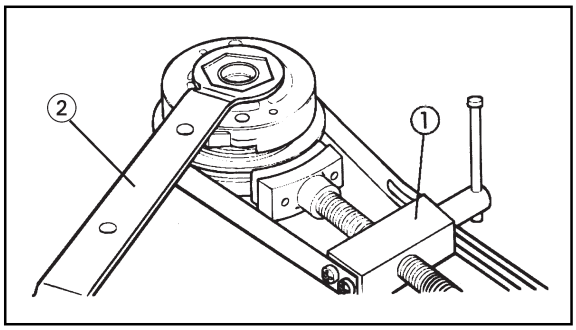

3. Attach:
   - sheave holder ①
   - nut spanner ② (41 mm)

	Sheave holder **90870-01701**

4. Loosen:
   - clutch securing nut

CAUTION:

Do not remove the clutch positioning nut yet.

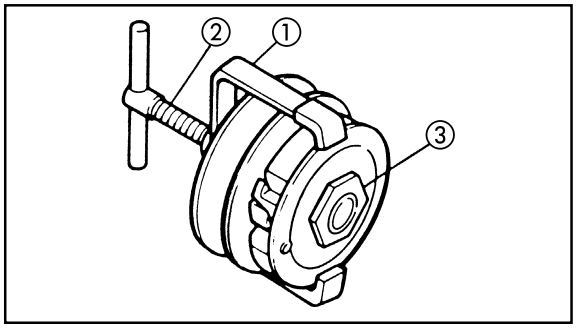

5. Attach:
   - clutch spring compressor ①

	Clutch spring compressor **90890-01337**

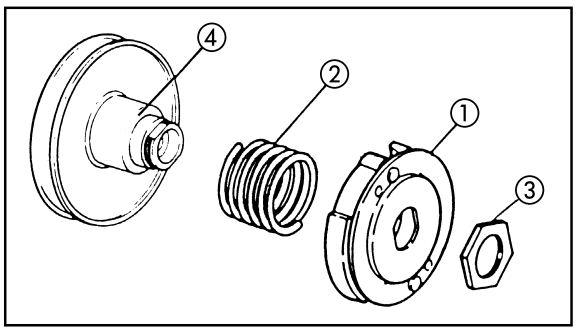

6. Remove:
   - clutch securing nut ③
7. Remove:
   - clutch assembly ①
   - secondary sheave spring ②
   - spring seat ④
   - guide pins
   - secondary sliding sheave

Downloaded from www.Manualslib.com manuals search engine

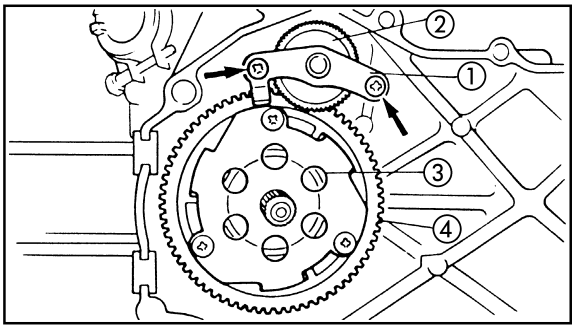

REMOVING THE STARTER SYSTEM

1. Remove:
   - plate ① (intermediate gearing)
   - intermediate gearing ②
   - starter clutch assembly ③
   - starter wheel gear ④

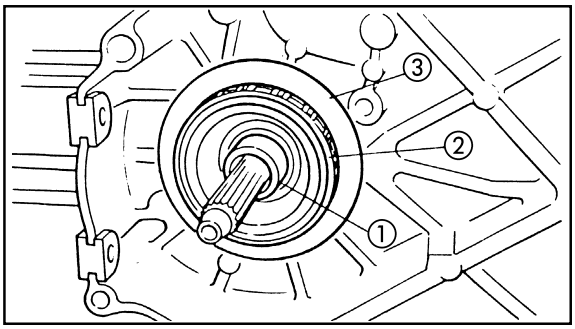

2. Remove:
   - spacer ①
   - bearing ②
   - washer ③
   - starter motor

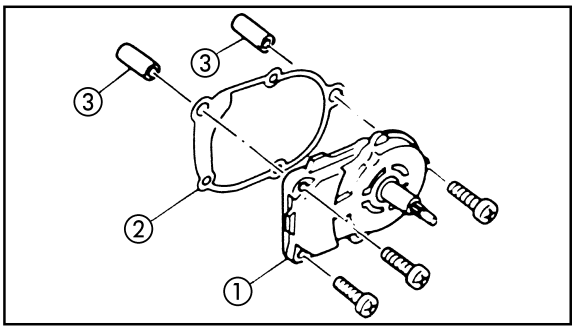

TRANSMISSION

1. Remove:
   - transmission box cover ①
   - gasket ②
   - dowel pins ③

NOTE:

Before proceeding to disassemble the transmission cover, empty the oil.

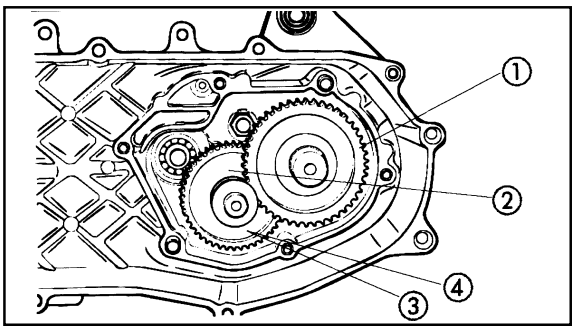

2. Remove:
   - main shaft ①
   - drive shaft ②
   - flat washer ③
   - conical spring washer ④

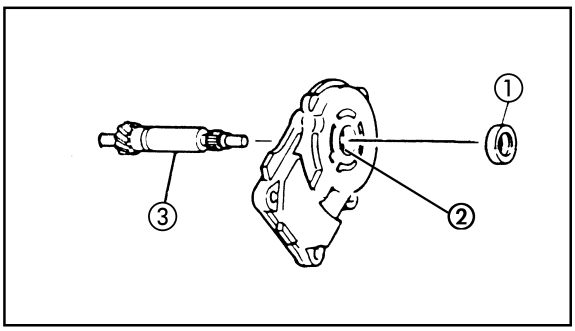

3. Remove:
   - oil seal ①
   - bearing ②
   - secondary sheave axle ③

Downloaded from www.Manualslib.com manuals search engine

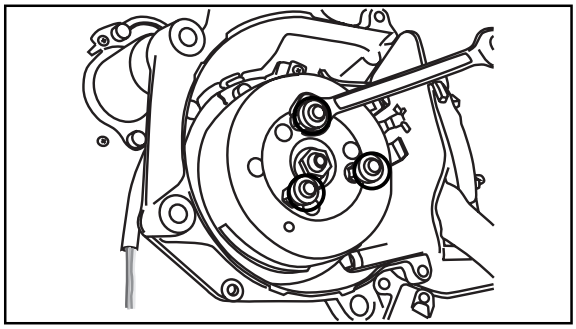

DC-CDI MAGNETO

1. Remove:
   - bolts (CS50Z only)

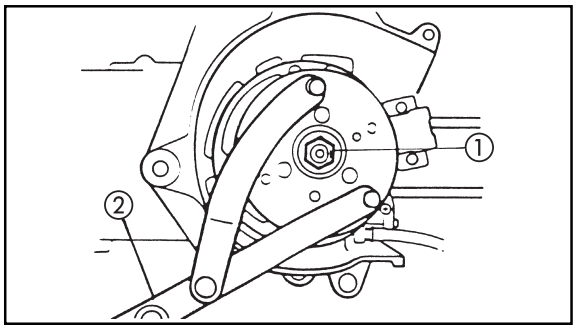

2. Remove:
   - nut ① (rotor)
   - flat washer

NOTE:

Support the rotor to loosen the nut with the engine flywheel holder ②.

Flywheel holder
90890-01235

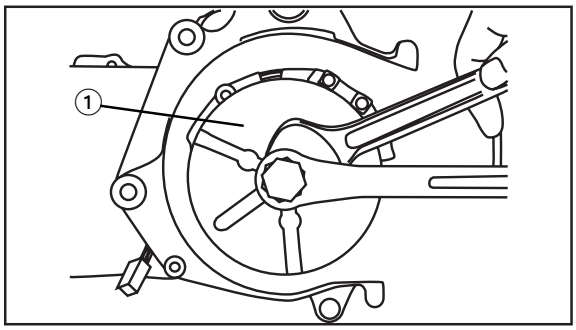

3. Remove:
   - rotor
   - woodruff key
     Use the flywheel puller ①

Flywheel puller
90890-01362

- stator assembly
- gasket

NOTE:

Attach the flywheel puller using the flywheel thread holes.

Downloaded from www.Manualslib.com manuals search engine

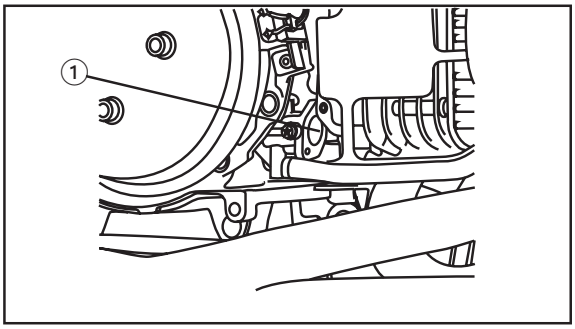

AUTOLUBE OIL PUMP

1. Remove:
   - autolube oil pump ①

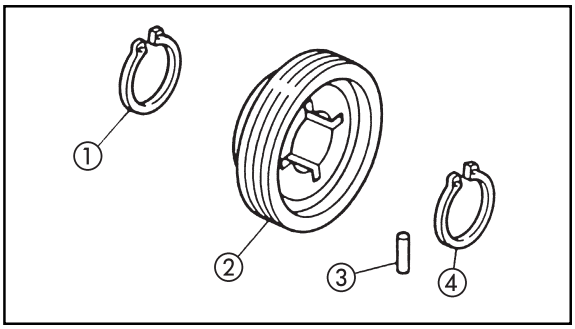

2. Remove:
   - circlip ①
   - pump drive gear ②
   - pin ③
   - circlip ④

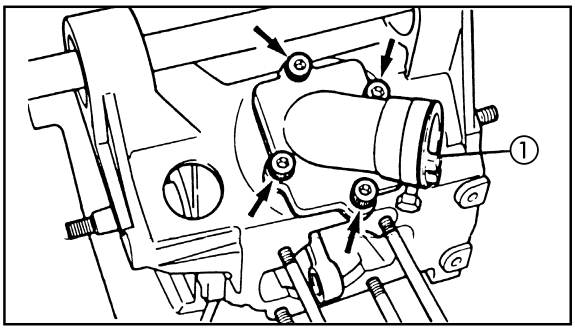

3. Remove:
   - carburetor joint ①
   - reed valve
   - reed valve gasket

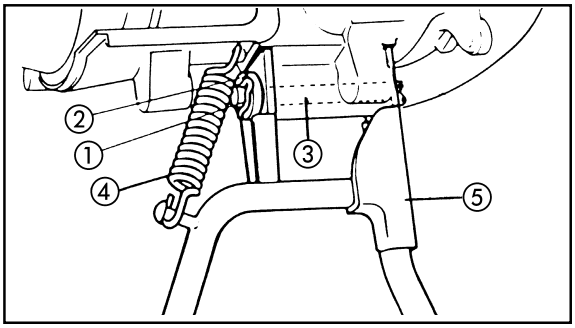

REMOVING THE CENTERSTAND

1. Remove:
   - clip ①
   - rubber washer ②
   - axle ③
   - spring ④
   - central stand ⑤

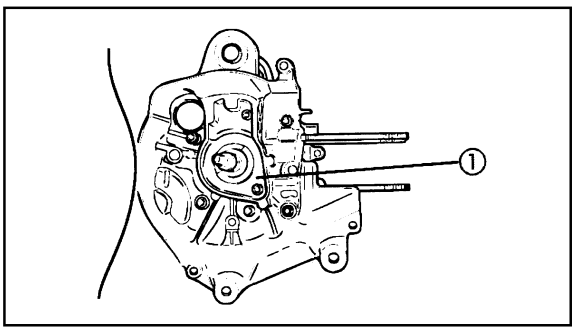

DISASSEMBLING THE CRANKCASE AND CRANKSHAFT

1. Remove:
   - oil seal stopper ①
   - screws (crankcase)

NOTE:

Loosen each screw 1/4 of a turn and remove them after loosening them.

Downloaded from www.Manualslib.com manuals search engine

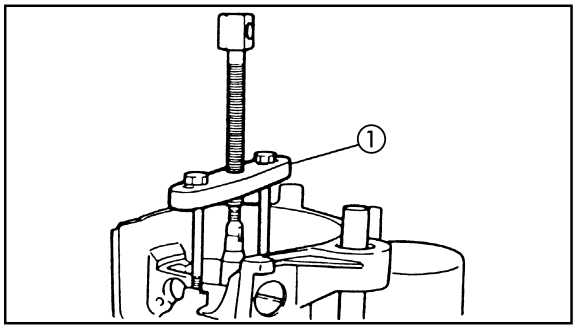

2. Attach:
   - crankcase puller ①

	Crankcase puller **90890-01135**

NOTE:

Fully tighten the positioning bolts of the tool, but ensure that the tool body is parallel with the box. If necessary, slightly loosen one of the bolts to level the body of the tool.

3. Remove:
   - crankcase (right)
     As pressure is applied, keep taping carefully on the engine mounting bosses.

CAUTION:

Tap on one side of the crankcase with a soft-face hammer. Tap only on reinforced portions of the crankcase, not on the crankcase mating surfaces. Work slowly and carefully and make sure the crankcase halves separate evenly.

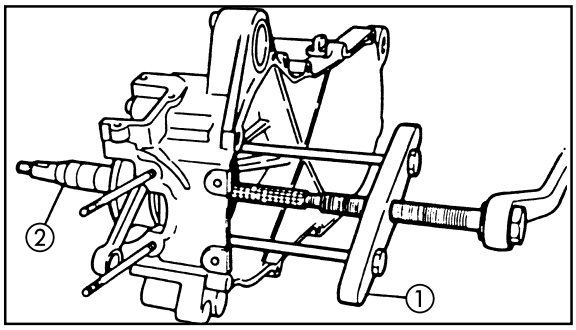

4. Attach:
   - crankcase puller ①

	Crankcase puller **90890-01135**

5. Remove:
   - crankshaft ②

Downloaded from www.Manualslib.com manuals search engine

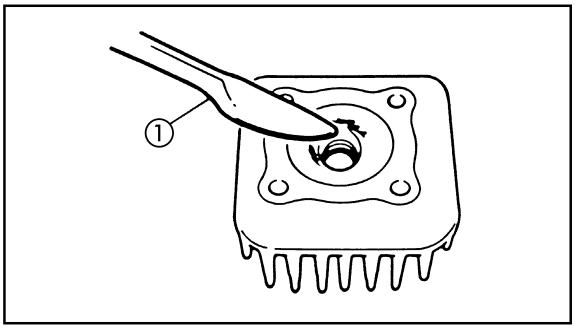

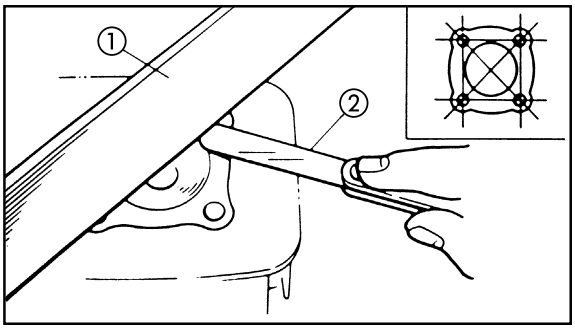

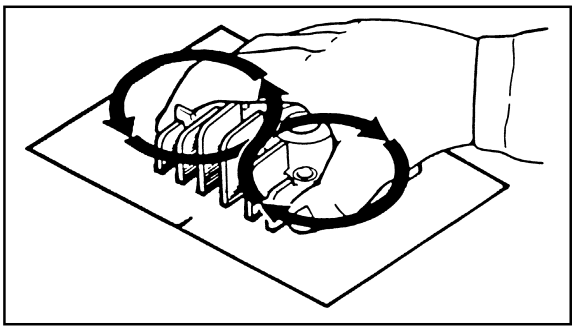

INSPECTION AND REPAIR

EAS00229

CHECKING THE CYLINDER HEAD

1. Eliminate:
   - combustion chamber carbon deposits (with a rounded scraper)

NOTE:

Do not use a sharp instrument to avoid damaging or scratching:
- spark plug bore threads

2. Check:
   - cylinder head
     Damage/scratches → Replace.
   - cylinder head water jacket (CS50Z only)
     Mineral deposits/ruts → Eliminate.
3. Measure:
   - cylinder head warpage
     Out of specification Resurface the cylinder head.

	Maximum cylinder head warpage 0.02 mm

▼▼▼▼▼▼▼▼▼▼▼▼▼▼▼▼▼▼▼▼▼▼▼▼▼▼▼▼▼▼▼▼▼▼

a. Place a straightedge ① and a tickness gauge ② across the cylinder head.
b. Measure the warpage.
c. If the limit is exceeded, resurface the cylinder head. as follows.
d. Place a 400 ~ 600 grit wet sandpaper on the surface plate and resurface the cylinder head using a figure-eight sanding pattern.

NOTE:

To ensure an even surface, rotate the cylinder head several times.

▲▲▲▲▲▲▲▲▲▲▲▲▲▲▲▲▲▲▲▲▲▲▲▲▲▲▲▲▲▲▲▲▲▲

Downloaded from www.Manualslib.com manuals search engine

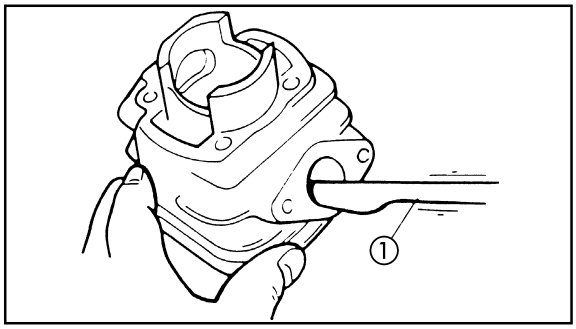

EAS00258

CHECKING THE CYLINDER AND PISTON

1. Eliminate:
   - carbon deposits
     Use a rounde scraper ①
2. Inspect:
   - cylinder wall Wear/striping → Rectify or change

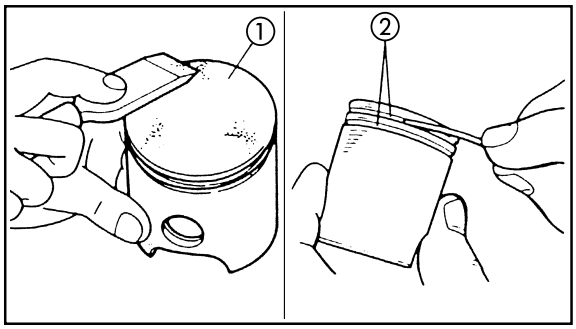

3. Eliminate:
   - carbon deposits
     From the piston crown ① and ring groovers ②.

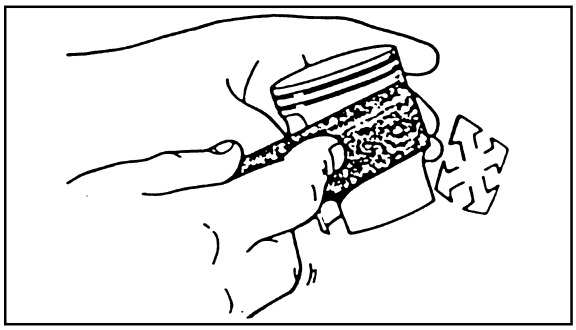

4. Remove:
   - cracking marks and carbon deposits on piston sides.
5. Inspect:
   - piston wall
     Wear/striping/damage → Replace.

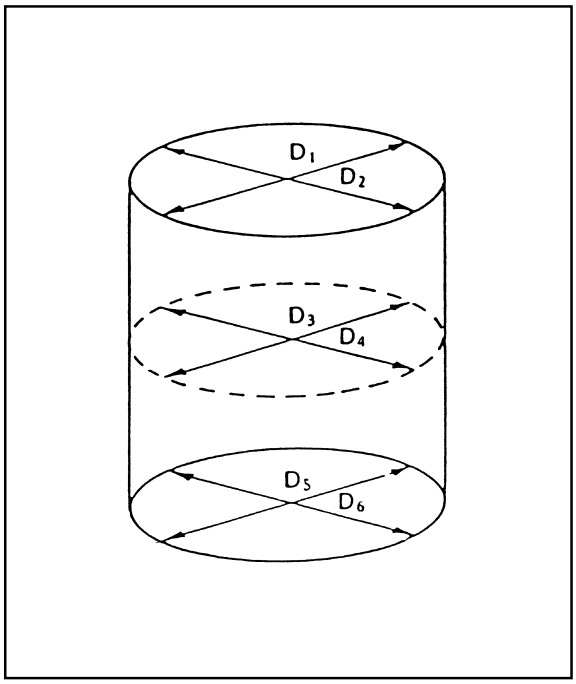

6. Measure:
   - piston to cylinder clearance

Downloaded from www.Manualslib.com manuals search engine

a. Measure cylinder bore “C” with the cylinder bore gauge.

NOTE:

Measure cylinder bore “C” by taking side-tosi-de and front-to-back measurements of the cylinder.Then, find the average of the measu-rements.

	Standard	Wear limit
Cylinder bore “C”	39.99 ~ 40.01 mm	40.1 mm
Taper Limit “T”	–	0.05 mm
Out of round “R”	–	0.01 mm
“C” = maximum of D_1 ~ D_6		
“T” = maximum of D_1, or D_2 - maximum of D_5 or D_6		
“R” = maximum of D_1, D_3 or D_5 - minimum of D_2, D_4 or D_6		

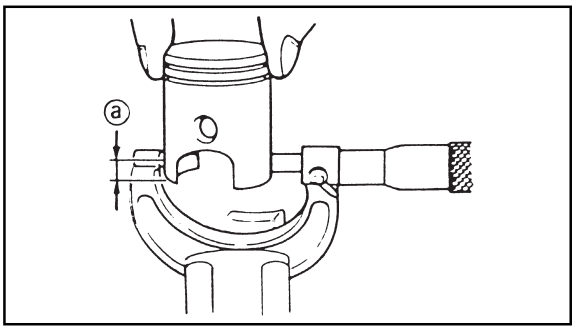

b. If out of specification, rebore or replace the cylinder, and replace the piston and piston rings as a set.
c. Measure piston skirt diameter “P” with the micrometer.

ⓐ 5 mm from the bottom edge of the piston.

	Piston size “P”
Standard	CS50: 39.952 ~ 39.972 mm CS50Z: 39.957 ~ 39.977 mm

d. If out of specification, replace the piston and piston rings as a set.
e. Calculate the piston-to-cylinder clearance with the following formula.

Piston-to-cylinder clearance=
Cylinder bore “C” -
Piston skirt diameter “P”

Piston-to-cylinder clearance
CS50: 0.034 ~ 0.047 mm
CS50Z: 0.029 ~ 0.042 mm
<Limit>: 0.1 mm

f. If out of specification, rebore or replace the cylinder, and replace the piston and piston rings as a set.

Downloaded from www.Manualslib.com manuals search engine

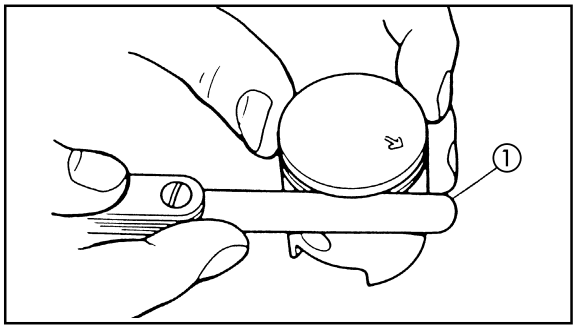

EAS00263

CHECKING THE PISTON RINGS

1. Measure:
   - piston ring side clearance
     Out of specification → Replace the piston and piston rings as a set.
   Use a Feeler Gauge ①

NOTE:

Before measuring the piston ring side clearance, eliminate any carbon deposits from the piston ring grooves and piston rings.

Piston ring side clearance
Top ring
0.03 ~ 0.05 mm
<Limit>: 0.1 mm
2nd ring
0.03 ~ 0.05 mm
<Limit>: 0.1 mm

2. Install:
   - piston ring
     (into the cylinder)

NOTE:

Level the piston ring into the cylinder with the piston crown.

ⓐ20 mm

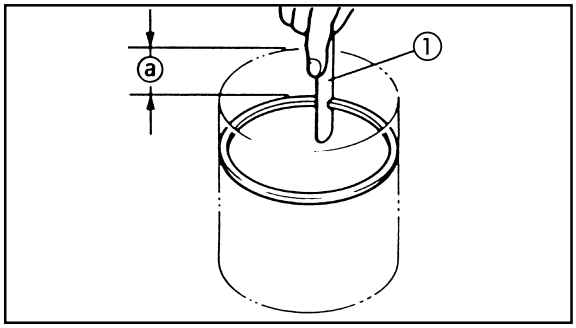

3. Measure:
   - piston ring end gap
     Out of specification → Replace the piston ring.
     Use a Feeler Gauge ①

Piston ring end gap
Top ring
0.15 ~ 0.35 mm
<Limit>: 0.6 mm
2nd ring
0.15 ~ 0.35 mm
<Limit>: 0.6 mm

Downloaded from www.Manualslib.com manuals search engine

EAS00265

CHECKING THE PISTON PIN AND PISTON PIN BEARING

1. Check:
   - piston pin
     Blue discoloration/grooves → Replace the piston pin and then check the lubrication system.

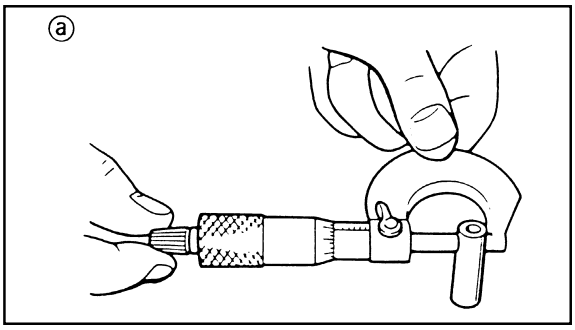

2. Measure:
   - piston pin outside diameter ⓐ
     Out of specification → Replace the piston pin.

Piston pin outside diameter
9.996 ~ 10.000 mm

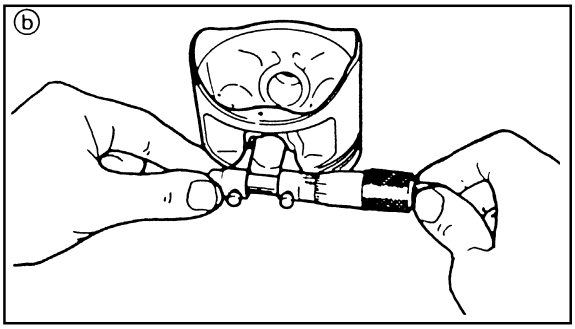

3. Calculate:
   - piston-pin-to-piston clearance
     Out of specification → Replace the piston pin and piston as a set.

Piston-pin-to-piston clearance=
Piston pin bore diameter ⓑ -
Piston pin outside diameter ⓐ

Piston-pin-to-piston clearance
0.004 ~ 0.017 mm
<Limit>: 0.07 mm

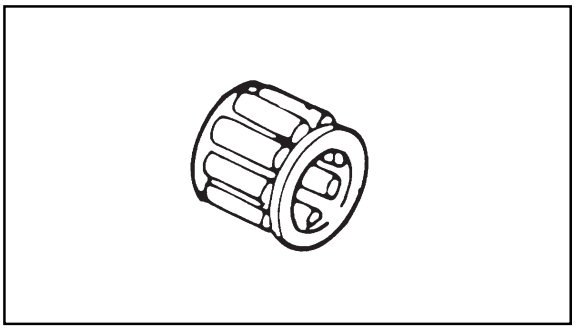

4. Inspect:
   - bearing (piston pin)
     Pitting/Damage → Change

Downloaded from www.Manualslib.com manuals search engine

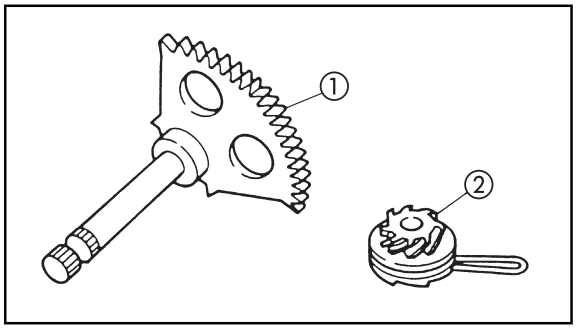

EAS00339

CHECKING THE KICKSTARTER

1. Check:
   - kick gear teeth ①
   - kick pinion gear teeth ②
     Damage/wear → Replace.

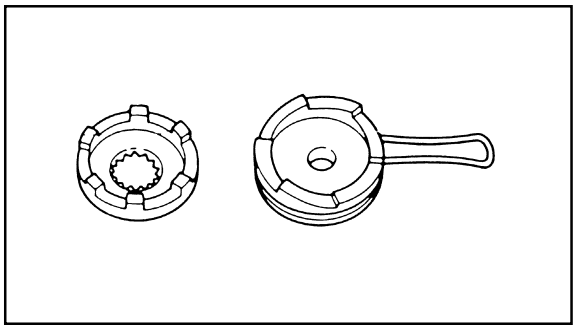

2. Check:
   - mating dogs (kick pinion gear and one-way clutch)
     Rounded edges/Damage → Replace.

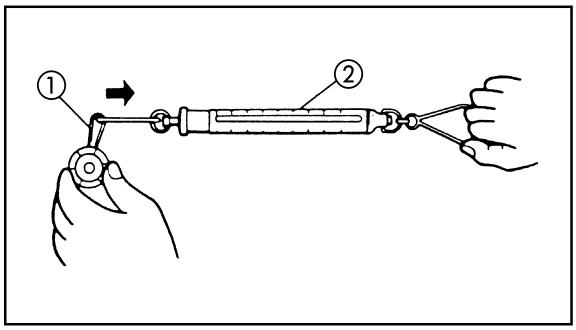

3. Measure:
   - kickstarter pinion gear clip force ①
     (with the spring gauge) ②
     Out of specification → Replace the kickstarter pinion gear clip.

	Kickstarter pinion gear clip force 150 ~ 250 gr (5.3 ~ 8.8 oz)

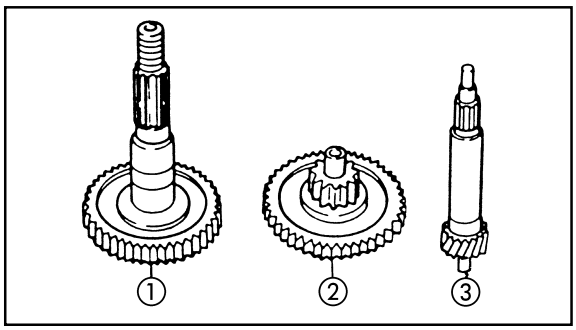

TRANSMISSION

1. Inspect:
   - main axle ①
   - drive axle ②
   - secondary sheave axle ③
     Burrs/Chips/Non-uniformity/Wear → Replace

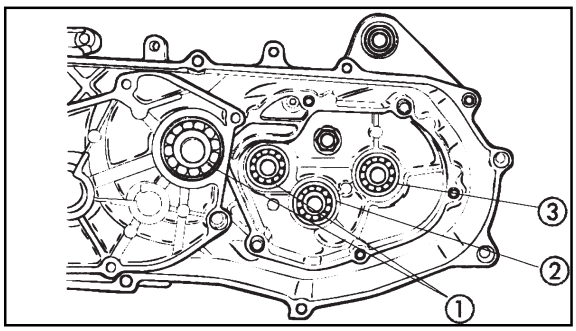

2. Inspect:
   - secondary sheave axle bearing ①
   - drive axle bearing ②
   - main axle bearing ③
     Pivot the inner guide of the bearing.
     Excessive play/Non-uniformity → Replace
     Pitting/Damage → Replace

Downloaded from www.Manualslib.com manuals search engine

AUTOLUBE OIL PUMP

Internal wear or poor operation may cause the pump to deviate from its factory adjustment. However, this is very uncommon. If incorrect operation is suspected, inspect the following:

1. Inspect:
   - supply line Obstruction Apply air under pressure.
     Wear/Damage → Replace.

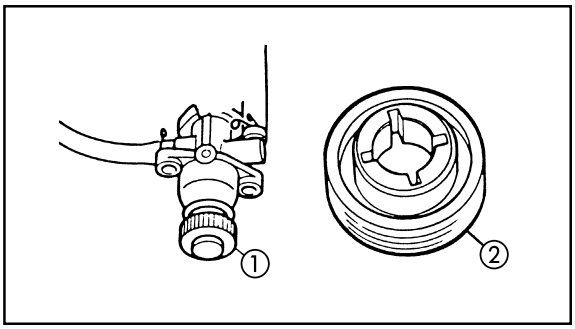

2. Inspect:
   - drive gear teeth of the autolube oil pump ①
   - gear teeth driven by autolube oil pump ②
     Pitting/Wear/Damage → Replace

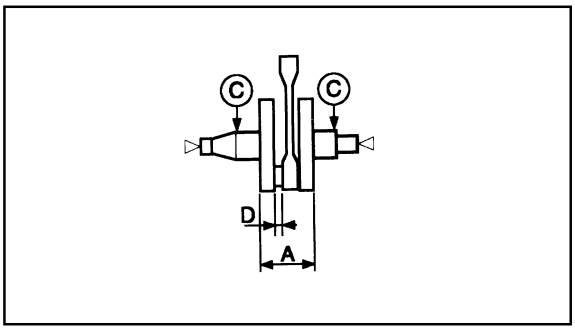

EAS00394

CHECKING THE CRANKSHAFT

1. Measure:
   - crankshaft runout Ⓒ
     Out of specification → Replace the crankshaft, bearing or both.

NOTE:

Turn the crankshaft slowly.

	Maximum crankshaft runout 0.03 mm

2. Measure:
   - big end side clearance Ⓓ
     Out of specification → Replace the big end bearing, crankshaft pin, or connecting rod.

	Big end side clearance 0.2 ~ 0.5 mm

3. Measure:
   - crankshaft width Ⓐ
     Out of specification → Replace the crankshaft.

	Crankshaft width 37.90 ~ 37.95 mm

Downloaded from www.Manualslib.com manuals search engine

EAS00401
CHECKING THE BEARINGS

1. Check:
   - bearings
     Clean and lubricate the bearings, then rotate the inner race with your finger.
     Rough movement → Replace.

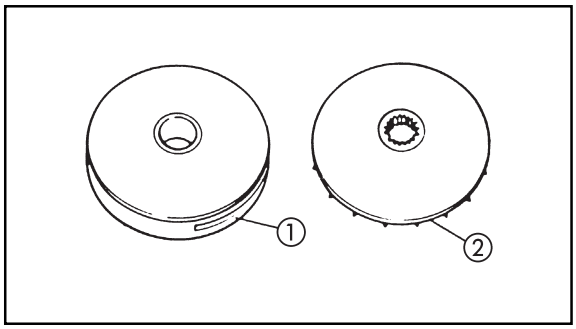

EAS00321
CHECKING THE PRIMARY SHEAVE

1. Inspect:
   - primary sliding pulley wheel ①
   - primary fixed pulley wheel ②
     Wear/Crackjs/Striping/Damage → Replace

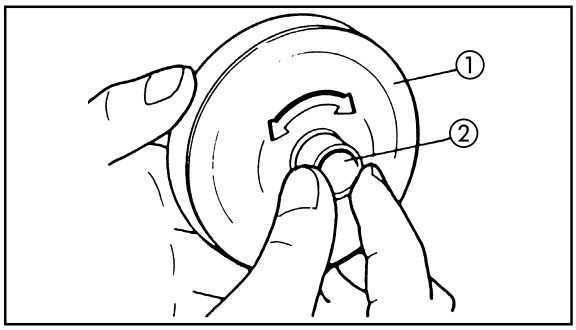

2. Check:
   - free movement
     Insert the collar ② in the primary sliding sheave ① and check if there is free movement.
     If it catches or there is excessive play → Replace the pulley wheel or the bushing.

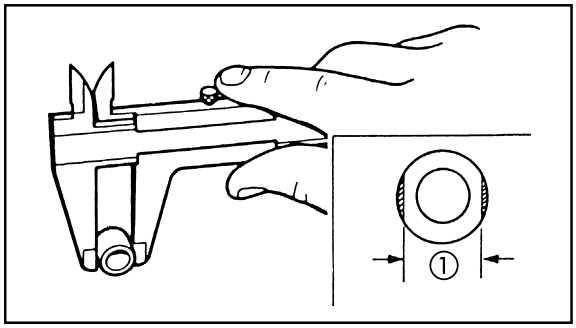

3. Measure:
   - external diameter ① (collar)
     Outside specified value → Replace

Primary sheave weight outside diameter
15 mm
<Limit>: 14.5 mm

Downloaded from www.Manualslib.com manuals search engine

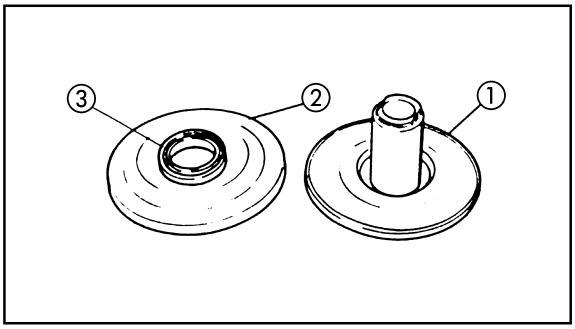

EAS00322

CHECKING THE SECONDARY SHEAVE

1. Inspect:
   - secondary fixed sheave ①
   - secondary sliding sheave ②
     Striping/Cracks/Damage → Replace as a set.
   - oil seal ③
     Damage → Replace.

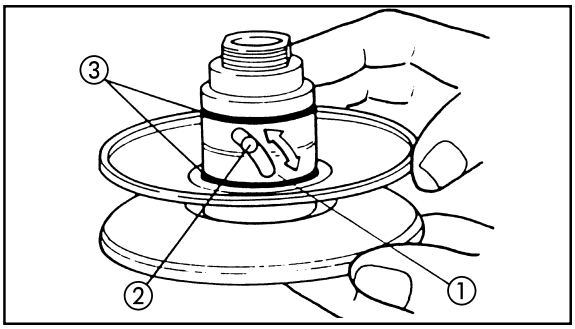

2. Inspect:
   - torque cam groove ①
   - guide pin ②
     Wear/Damage → Replace as a set
   - o-ring ③
     Damaged → Replace

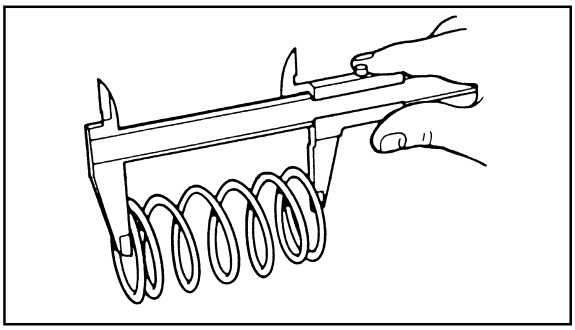

3. Measure:
   - clutch spring free length
     Outside specified value → Replace

Clutch spring free length
121.7 mm
<Limit>: 106.7 mm

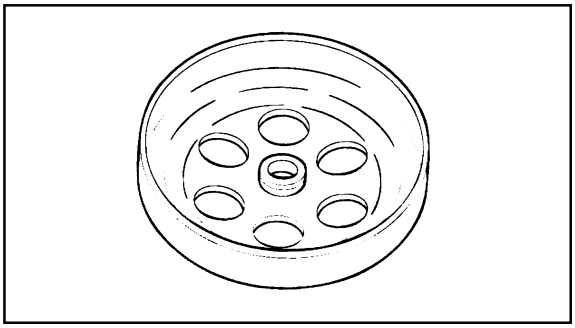

4. Inspect:
   - clutch housing inner surface
     Oil/Striping → Clean

Oil	**Use a cloth dampened with dissolvent**
Striping	**Use sand paper (polish lightly and uniformly)**

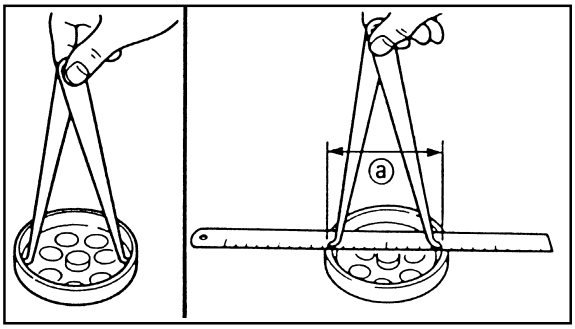

5. Measure:
   - internal diameter of the clutch hub ⓐ
     Outside of specification → Replace

Clutch housing inside diameter
107.0 mm
<Wear limit>: 107.4 mm

Downloaded from www.Manualslib.com manuals search engine

6. Inspect:
   - clutch shoes
     Shiny parts → Polish with sand paper.

NOTE:

After using sand paper, clean off the polished particles with a cloth.

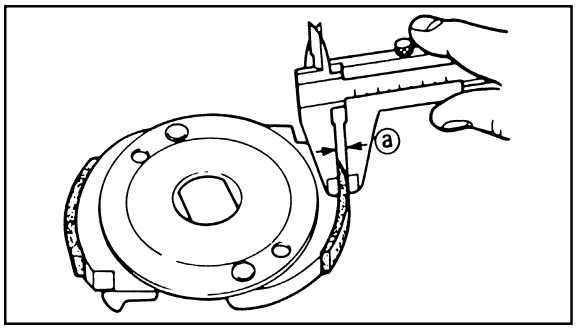

7. Measure:
   - clutch shoe thickness ⓐ
     Outside specified value → Replace

Clutch shoe thickness
2.0 mm
<Wear limit>: 1.0 mm

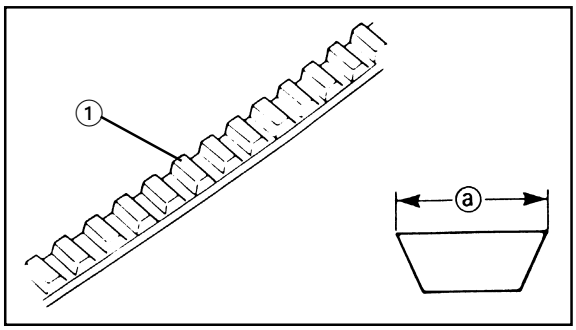

EAS00320

CHECKING THE V-BELT

1. Check:
   - v-belt ①
     Cracks/damage/wear → Replace
     Grease/oil → Clean the primary and secondary sheave.

2. Measure:
   - v-belt width ⓐ
     Out of specification → Replace

V-belt width
16.5 mm
<Limit>: 15.7 mm

Downloaded from www.Manualslib.com manuals search engine

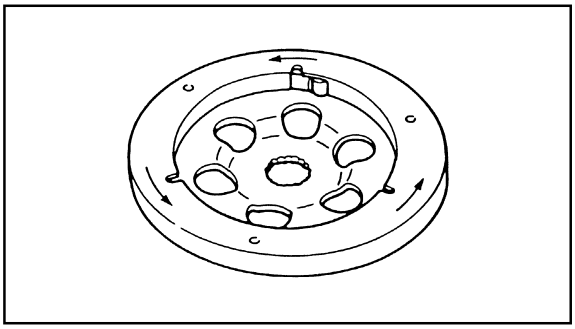

STARTER CLUTCH AND GEARS

1. Inspect:
   - starter clutch
     Press the conical pin in the direction of the arrow.
     Unsmooth operaton → Replace starter clutch assembly

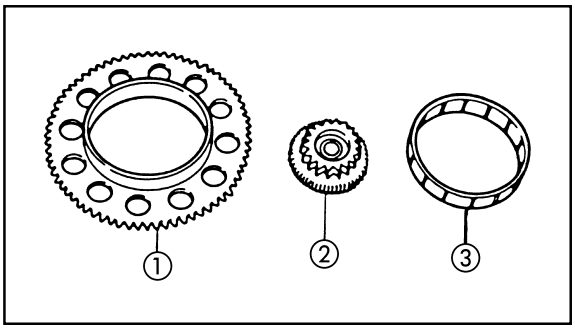

2. Inspect:
   - starter wheel gear teeth ①
   - idle gear teeth ②
     Burrs/Spalling/Non-uniformity/Wear → Replace
   - bearing ③ (starter wheel gear)
     Pitting/Damage → Replace

Downloaded from www.Manualslib.com manuals search engine

ENGINE ASSEMBLY AND ADJUSTMENT

EAS00381

CRANKSHAFT AND CRANKCASE

① Oil seal
② Oil seal catch
③ Crankcase (right)
④ Dowel pin
⑤ Bearing
⑥ Crankshaft (right)
⑦ Bearing
⑧ Crankshaft pin
⑨ Connecting rod
⑩ Crankshaft (left)
⑪ Bearing
⑫ Engine mounting spacer
⑬ Crankcase (left)
⑭ Oil seal

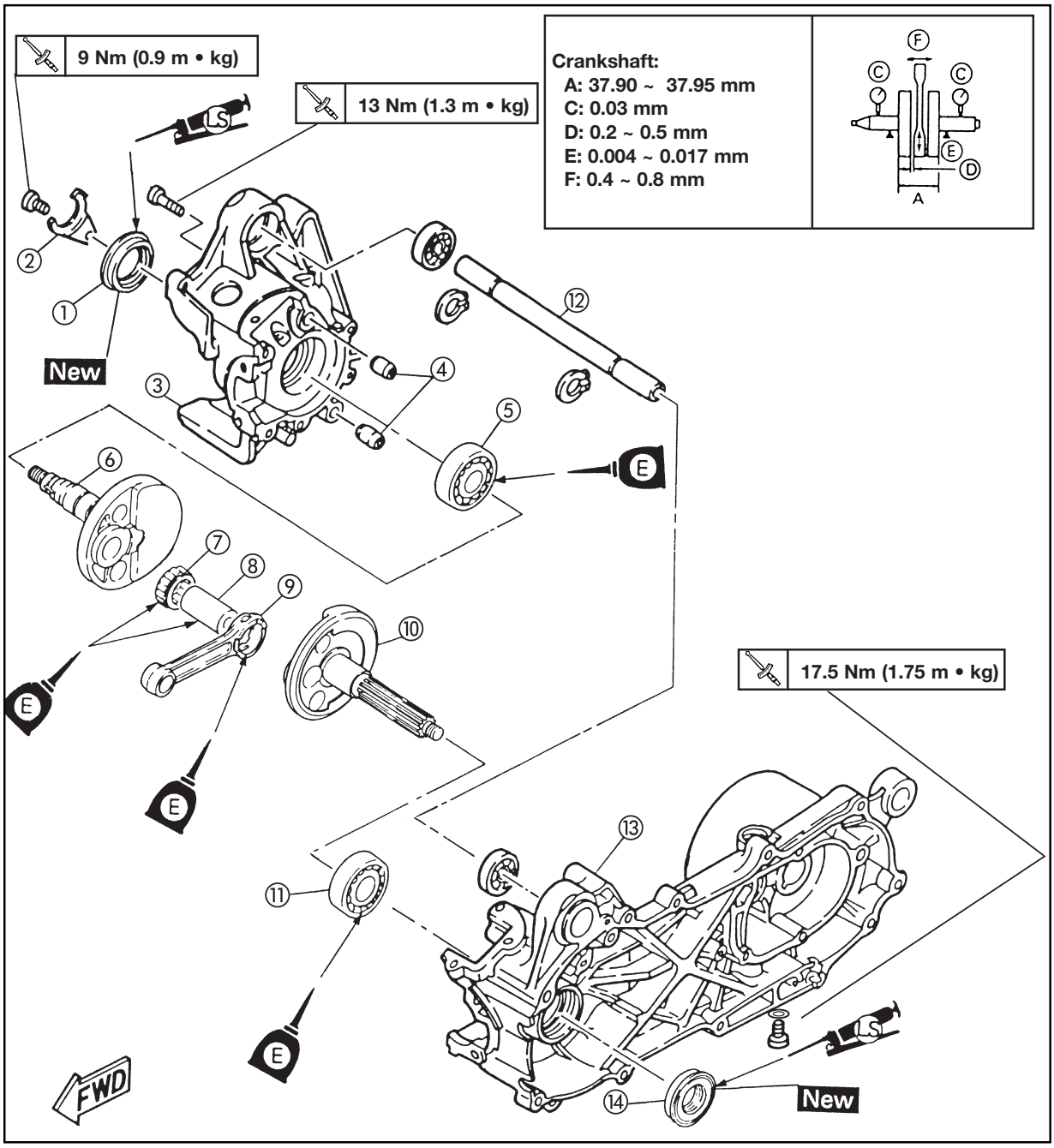

Downloaded from www.Manualslib.com manuals search engine

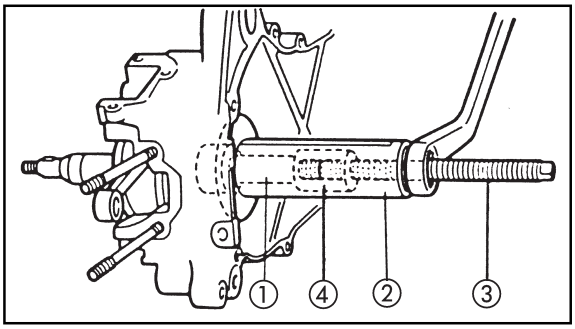

EAS00407

INSTALLING THE CRANKSHAFT

1. Place:
   - crankshaft installation tool

	Crankshaft installation tool **①: 90890-01411** **②: 90890-01274** **③: 90890-01275** **④: 90890-01277**

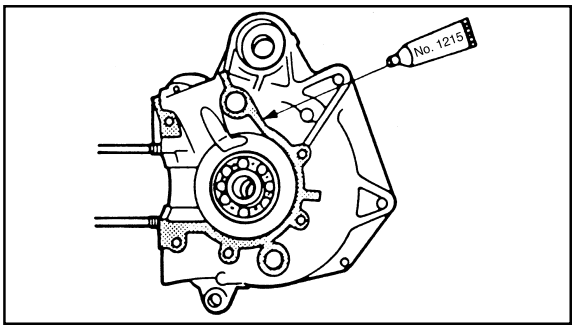

2. Install:
   - crankshaft:
     (in left crankcase)
3. Install:
   - dowell pins
4. Apply:
   - Yamaha Nº 1215 adhesive on the corresponding surfaces of both halves of the crankcase

	Yamaha Nº 1215 adhesive **90890-85505**

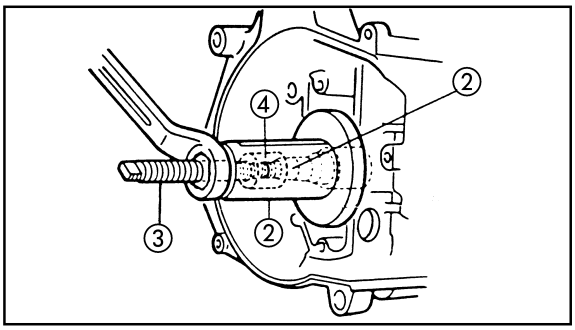

5. Place:
   - crankshaft installation tool

	Crankshaft installation tool **①: 90890-01411** **②: 90890-01274** **③: 90890-01275** **④: 90890-01277**

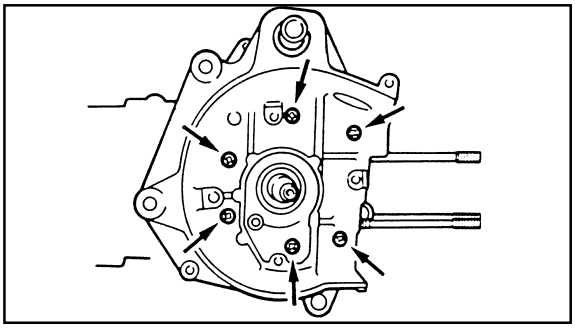

6. Install:
   - right crankcase
7. Tighten:
   - crankcase positioning screws

NOTE:

Tigten the crankcase positioning screws in stages, using a crossed method for tightening.

	Screw (Crankcase) **13 Nm (1.3 m • kg)**

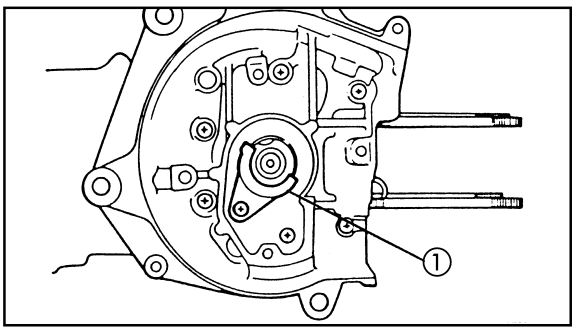

8. Check:
   - rotation of crankshaft
     rough turning → Repair
9. Install:
   - oil seal catch plate ①

	Screw (oil seal catch plate) **9 Nm (0.9 m • kg)**

Downloaded from www.Manualslib.com manuals search engine

EAS00360

AUTOLUBE OIL PUMP AND DC-CDI MAGNETO

① Fan (CS50 only)
② Flat washer
③ Rotor assembly
④ Charge coil
⑤ Lighting coil
⑥ Pickup coil
⑦ Stator plate
⑧ Oil seal
⑨ Gasket
⑩ Oil hose
⑪ Oil delivery hose
⑫ Bushing
⑬ Autolube pump
⑭ O-ring
⑮ Circlip
⑯ Oil pump drive gear
⑰ Pin

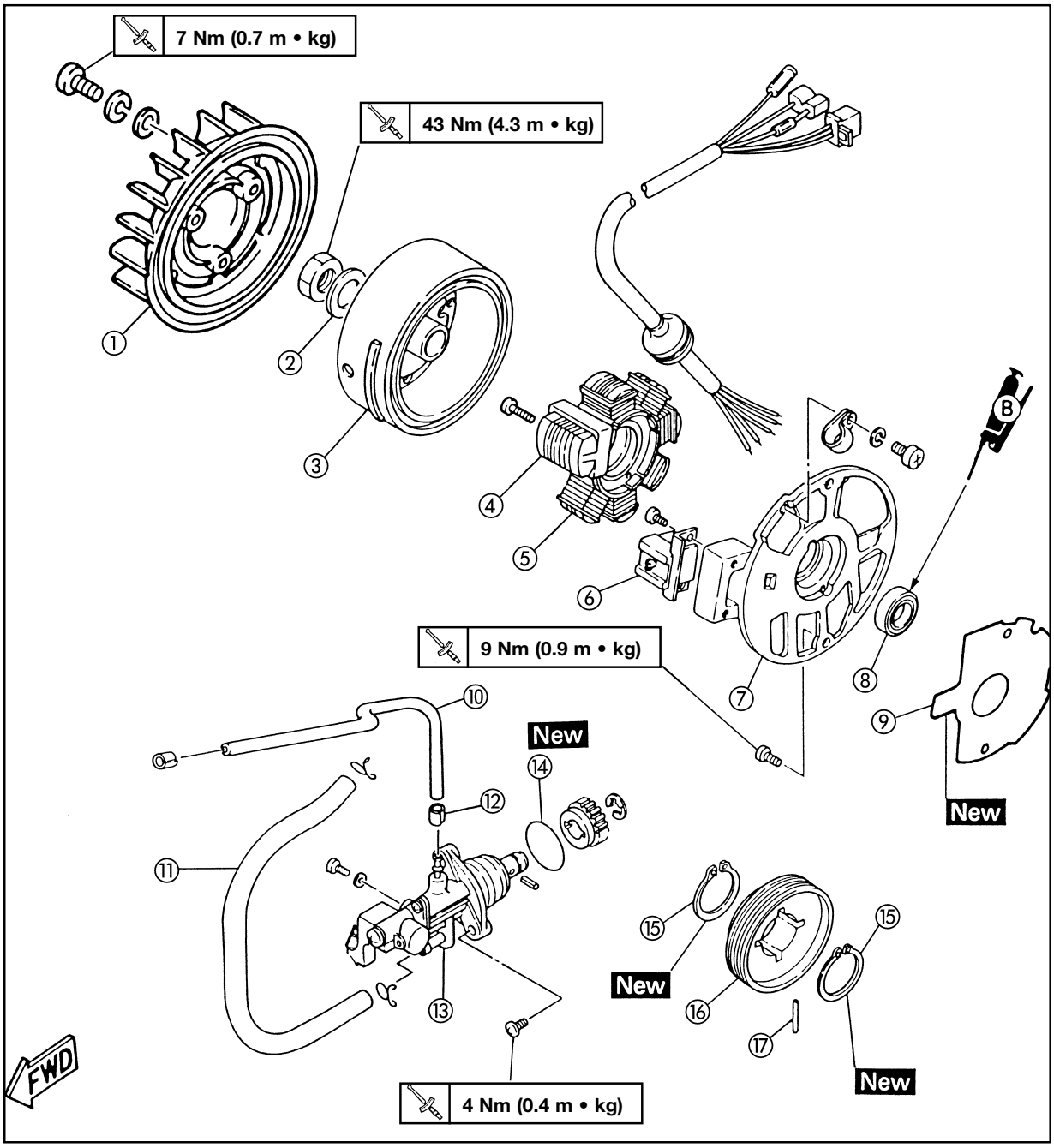

Downloaded from www.Manualslib.com manuals search engine

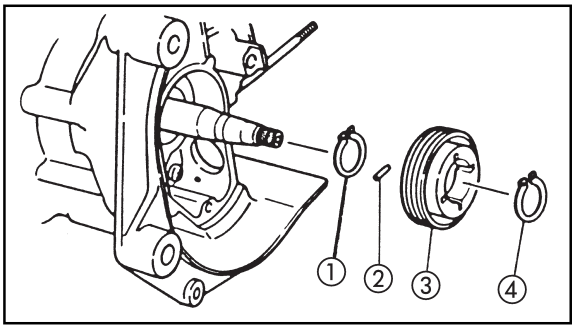

INSTALLING THE AUTOLUBE OIL PUMP

1. Install:
   - circlip ①
   - pin ②
   - pump drive gear ③
   - circlip ④

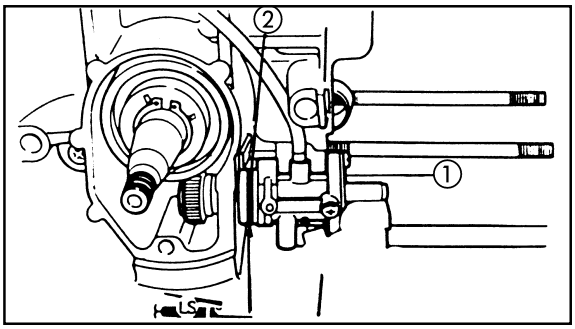

2. Apply:
   - grease with lithium soap base (on the o-ring ②)
3. Install:
   - autolubrication pump ①

	Screw (autolubrication pump) 4 Nm (0.4 m • kg)

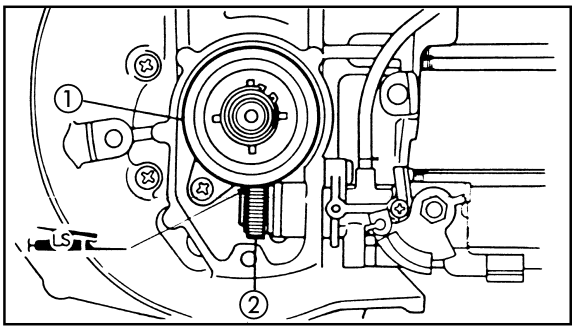

4. Apply:
   - grease with lithium soap base (on the autolubrication pump gear ①, ②)

	Lithium soap base grease 15 cc (0.92 cu • in)

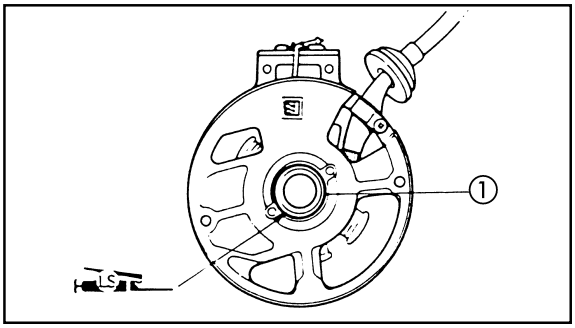

INSTALLING THE DC-CDI MAGNETO

1. Install:
   - gasket
2. Apply:
   - grease with lithium soap base (on the oil seal ①)
3. Pass the wheel cable through the crankcase orifice.

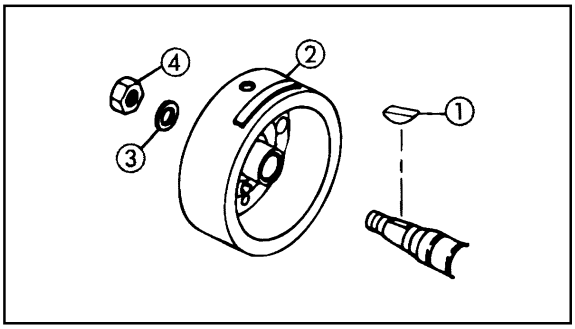

4. Install:
   - stator assembly

	Screw (stator assembly) 8.5 Nm (0.85 m • kg)

5. Install:
   - woodruff key ①
   - rotor ②
   - plain washer ③
   - nut ④

Downloaded from www.Manualslib.com manuals search engine

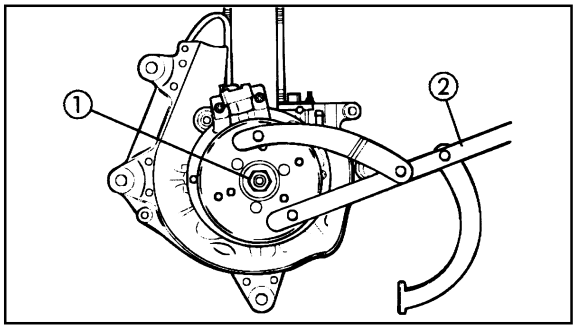

6. Tighten:
   - nut ①(magneto rotor)
     Use the flywheel holding tool ②.

	Flywheel holding tool **90890-01235**

	Nut (Flywheel magneto) **43 Nm (4.3 m • kg)**

Downloaded from www.Manualslib.com manuals search engine

EAS00419
TRANSMISSION

① Circlip
② Bearing
③ Oil seal
④ Drive axle
⑤ Bearing
⑥ Main axle
⑦ Conical spring washer
⑧ Flat washer
⑨ Secondary sheave axle
⑩ Bearing
⑪ Dowel pin
⑫ Gasket
⑬ Transmission case cover
⑭ Bearing
⑮ Oil seal

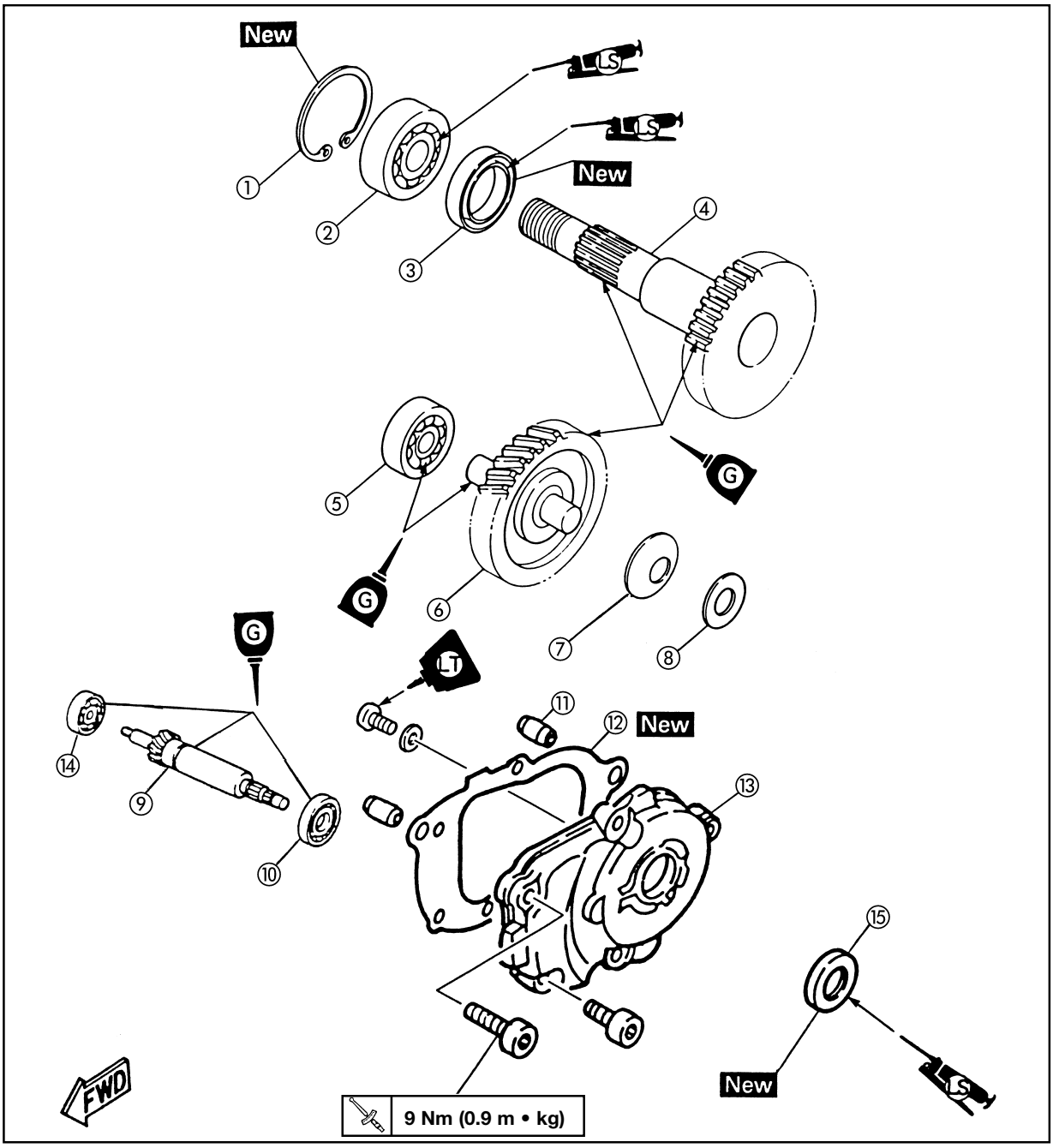

Downloaded from www.Manualslib.com manuals search engine

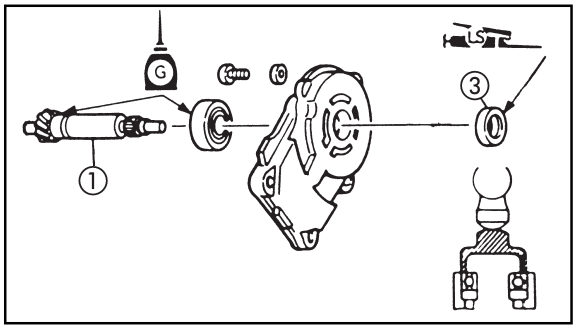

EAS00428

INSTALLING THE TRANSMISSION

1. Apply:
   - SE engine oil type 10W30
     (on the tansmission box cover bearing)
2. Install:
   - secondary sheave axle ①
     (on transmission case cover)
3. Install:
   - circlip ②
   - oil seal ③

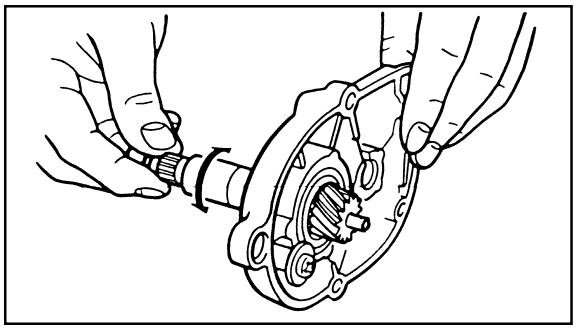

NOTE:

Apply grease with lithium soap based onto the oil seal lips.

4. Check:
   - rotation of secondary sheave axle
     Rough rotation → Repair.

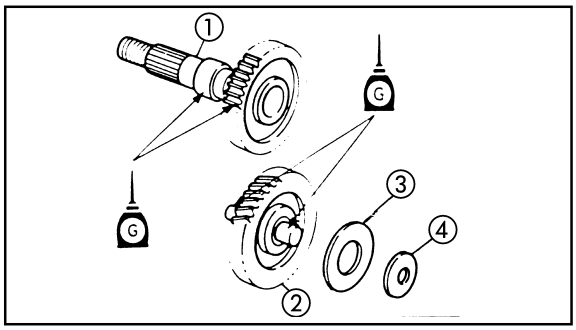

5. Apply:
   - SE type 10W30 engine oil
     (on bearing of main axle and drive axle bearing)
6. Install:
   - drive axle ①
   - main axle ②
   - conical spring washer ③
   - flat washer ④

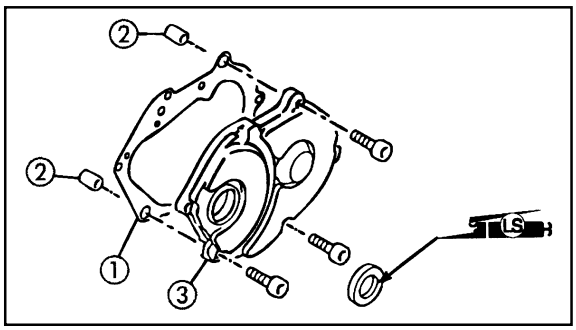

7. Install:
   - gasket
   - dowel pins
   - transmission case cover

	Screw (case cover) **9 Nm (0.9 m • kg)**

Downloaded from www.Manualslib.com manuals search engine

STARTER SYSTEM

① Collar
② Starter wheel gear
③ Bearing
④ Starter clutch
⑤ Plate
⑥ Shaft
⑦ Flat washer
⑧ Idle gear
⑨ O-ring
⑩ Starter motor

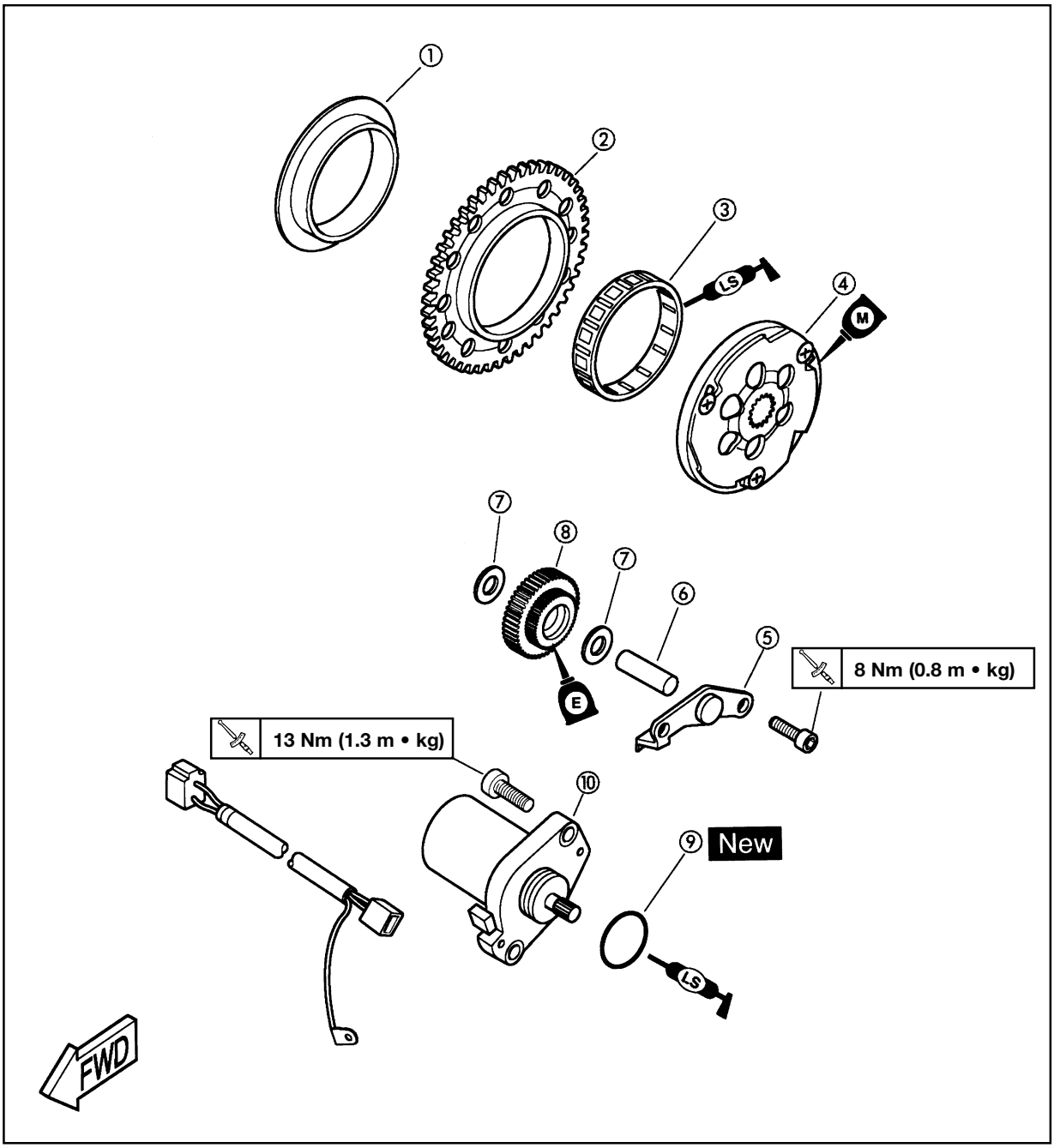

Downloaded from www.Manualslib.com manuals search engine

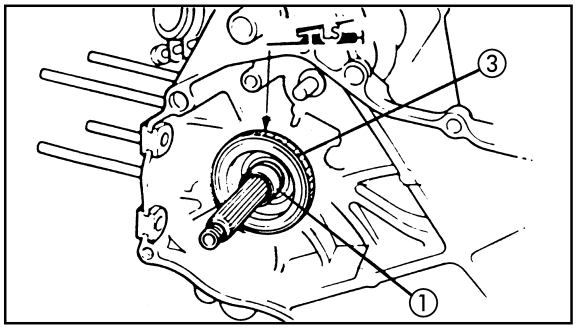

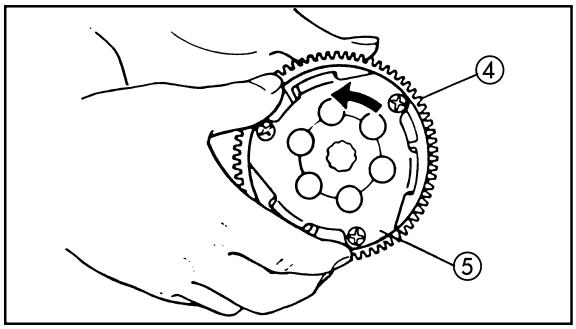

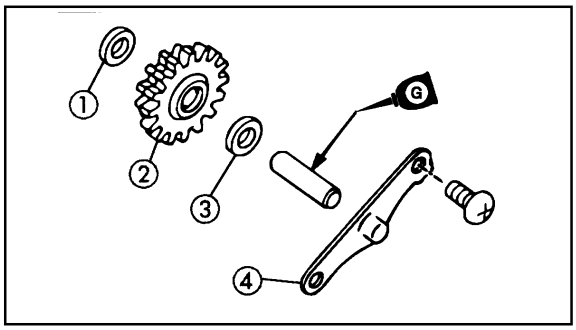

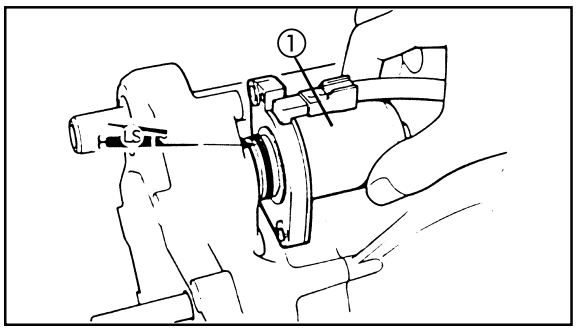

INSTALLING THE STARTER SYSTEM

1. Install:
   - bushing ①
   - bearing ③
   - starter wheel gear ④
   - starter clutch ⑤

NOTE:

- Apply grease with a lithium soap base on the bearing ③.
- Apply molybdenum disulphide oil on the pin (starter clutch) ⑤.

2. Install:
   - flat washer ①
   - idle gear ②
   - flat washer ①
   - plate ③ (intermediate gear)

	Screw (intermediate gear plate) **8 Nm (0.8 m • kg)**

NOTE:

Apply engine oil on the intermediate gear ②.

3. Install:
   - starter motor ①

	Screw (starter motor) **13 Nm (1.3 m • kg)**

NOTE:

Apply grease with a lithium soap base on the o-ring of the starter motor.

Downloaded from www.Manualslib.com manuals search engine

PRIMARY AND SECONDARY SHEAVE

① Nut
② Clutch drum
③ Clutch plate
④ Clutch spring
⑤ Spring
⑥ Spring seat
⑦ Oil seal
⑧ O-ring
⑨ Secondary sliding sheave
⑩ V-belt
⑪ Guide pin
⑫ Secondary fixed sheave
⑬ Conical washer
⑭ One-way clutch
⑮ Special washer
⑯ Primary fixed sheave
⑰ Shim
⑱ Collar
⑲ Primary sliding sheave
⑳ Weight
㉑ Slider
㉒ Cam

*: Apply assembly lube

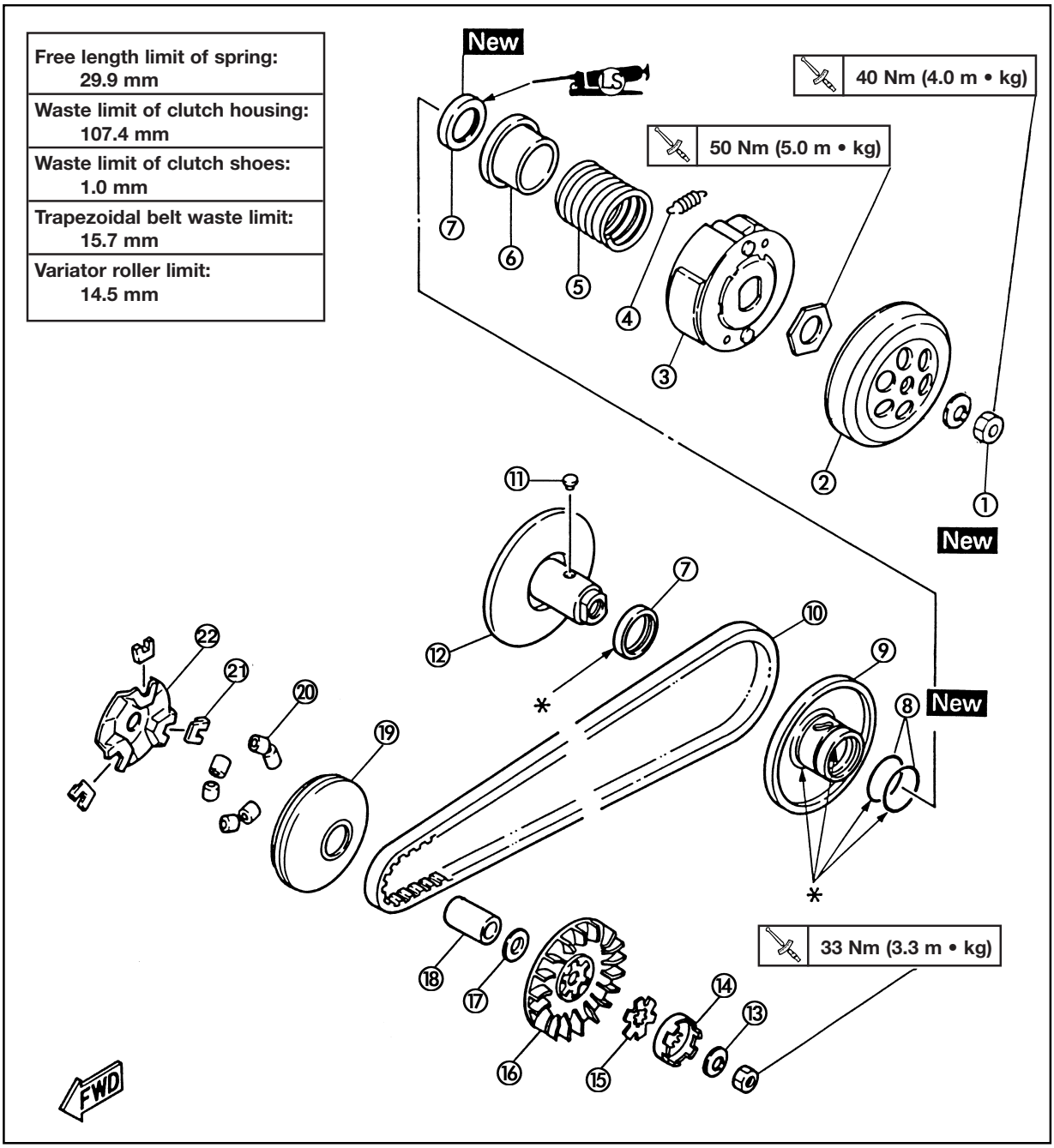

Downloaded from www.Manualslib.com manuals search engine

EAS00338
KICKSTARTER

① Kick shaft
② Return spring
③ Collar
④ Flat washer
⑤ Circlip
⑥ Kick crank
⑦ Kick pinion gear clip
⑧ Kick pinion gear

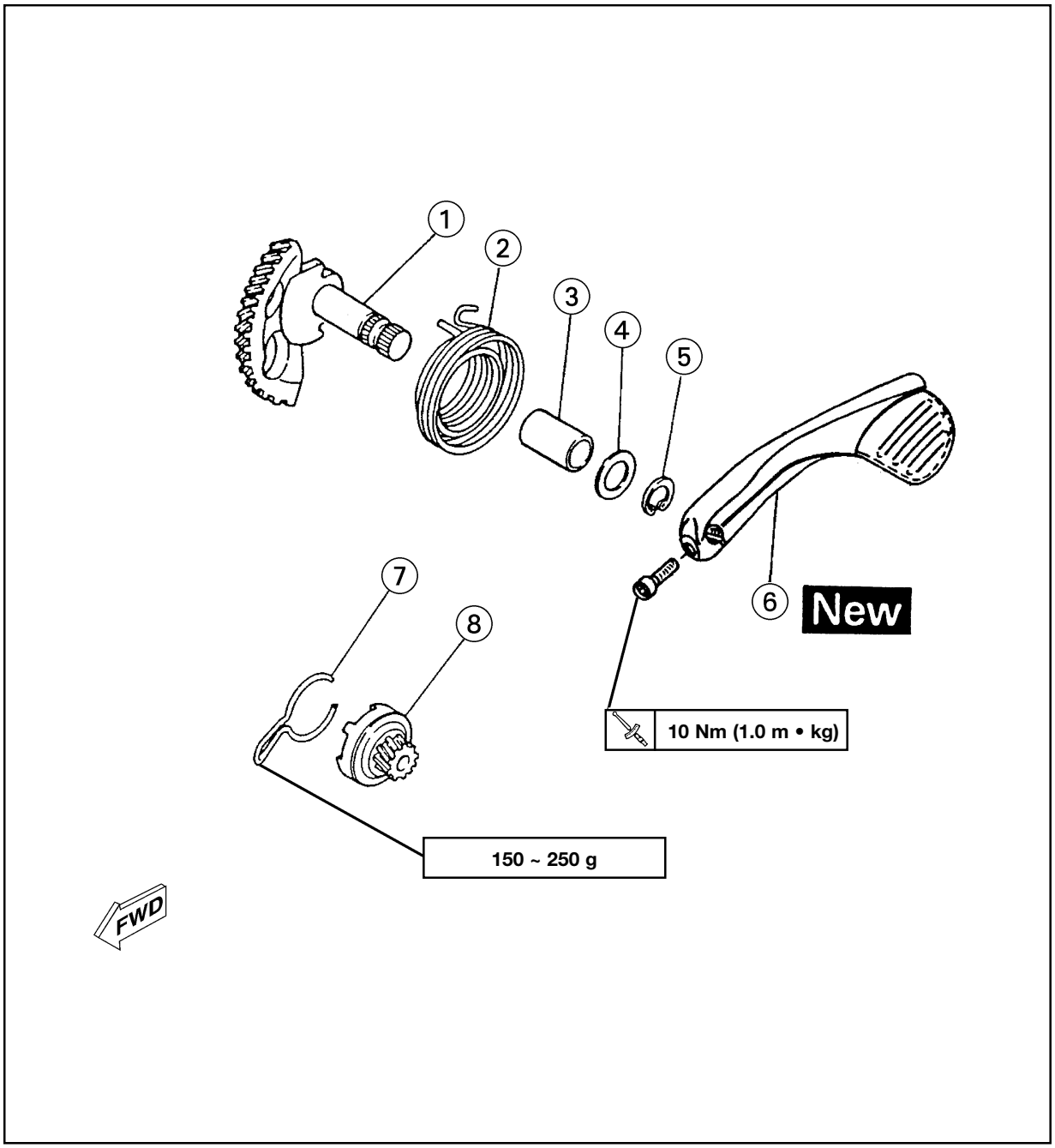

Downloaded from www.Manualslib.com manuals search engine

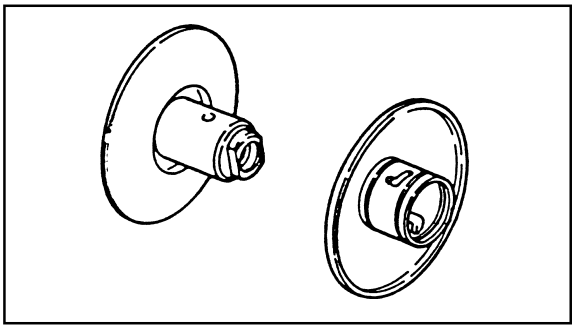

EAS00324

ASSEMBLING THE SECONDARY SHEAVE

1. Lubricate:
   - secondary fixed sheave's inner surface
   - secondary sliding sheave's inner surface

	Recommended lubricant assembly lube

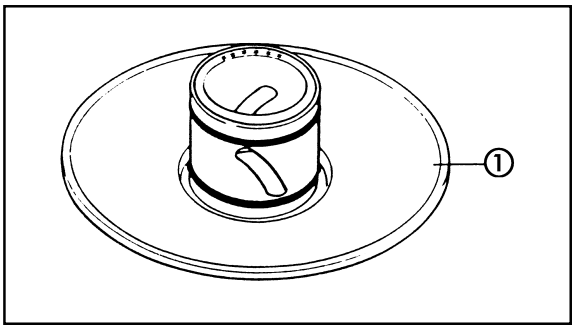

2. Install:
   - secondary sliding sheave 1

NOTE:

Take care that the lips of the oil seals do not turn when the pulley wheel is installed.

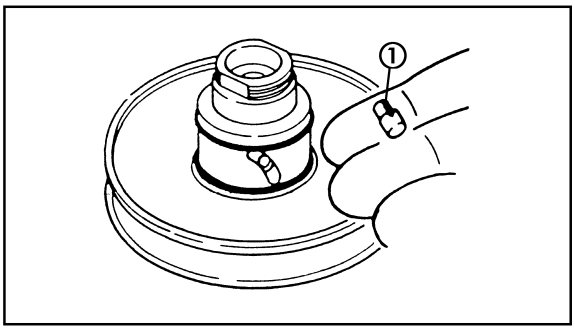

3. Install:
   - guide pin 1
4. Lubricate:
   - guide pin groove
   - oil seal
     (with the recommended lubricant)

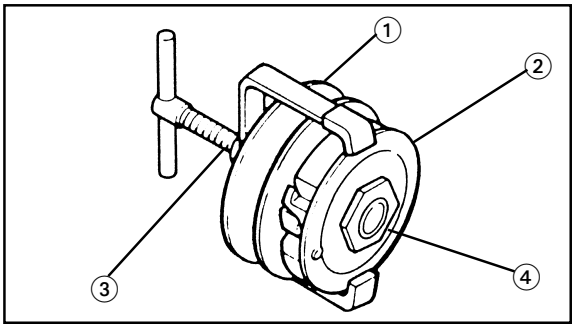

5. Install:
   - secondary sheave complete 1
   - spring
   - clutch carrier 2
   - spacer (diameter = 30 mm, thickness = 2 ~ 3 mm)

NOTE:

Attach the clutch spring holder and clutch spring holder arm 3 onto the secondary sheave as shown. Then, compress the spring, and tighten the clutch securing nut 4.

	Clutch spring holder 90890-01337

Downloaded from www.Manualslib.com manuals search engine

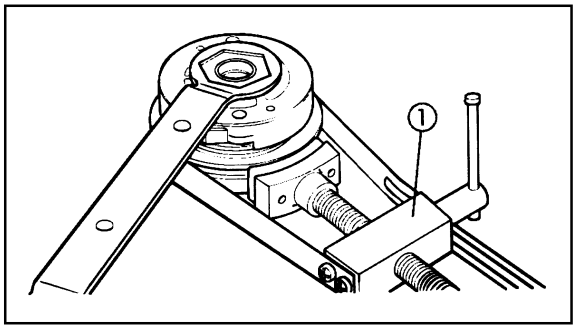

6. Tighten:
   - clutch securing nut
     use sheave holder ①
     spanner (41 mm)

	Sheave holder **90890-01701**

	Clutch securing nut **50 Nm (5.0 m • kg)**

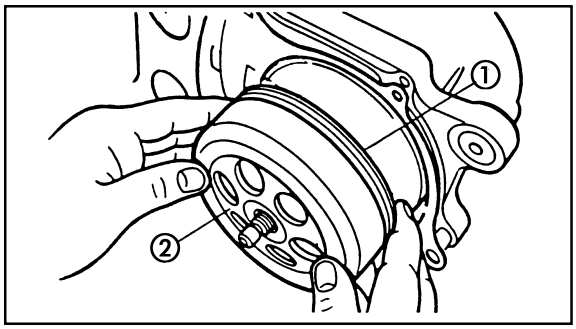

7. Install:
   - dowel pin
   - gasket
   - secondary assembly ①
   - clutch housing ②

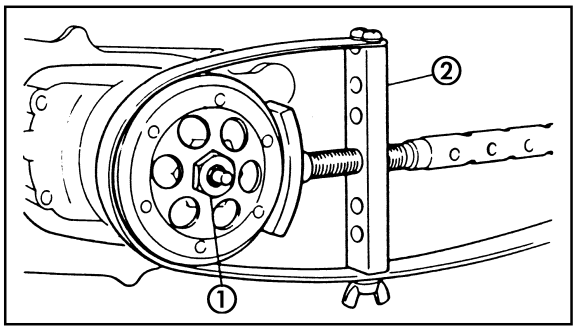

8. Tighten:
   - nut ① (secondary sheave)
     Use sheave holder

	Sheave holder **90890-01701**

	Nut (secondary sheave) **40 Nm (4.0 m • kg)**

EAS00323

ASSEMBLING THE PRIMARY SHEAVE

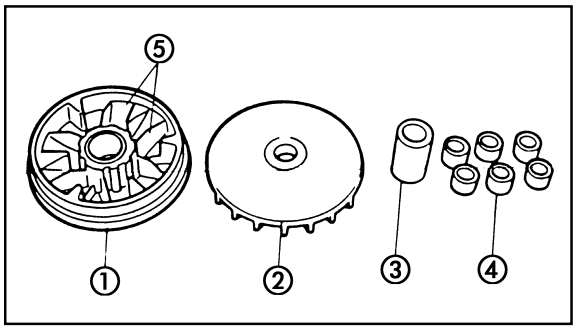

1. Clean:
   - primary sliding sheave face ①
   - primary fixed sheave face ②
   - collar ③
   - primary sheave weights ④
   - primary sliding sheave cam surface ⑤

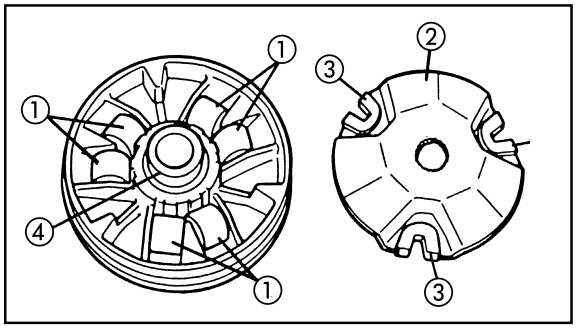

2. Install:
   - primary sheave weights ①
   - cam ②
   - slider ③
   - collar ④

NOTE:

Before installing the primary sheave weights, lubricate the inside and outside of each weight.

Downloaded from www.Manualslib.com manuals search engine

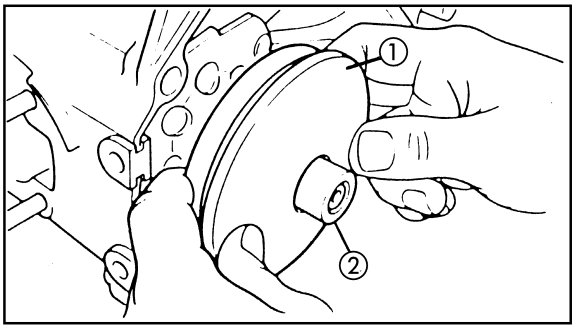

3. Check:
   - cam operation
     Unsmooth operation → Repair
4. Install:
   - primary sheave assembly ①
   - collar ②
5. Install:
   - v-belt

NOTE:

The v-belt should be installed with the arrow facing towards the front.

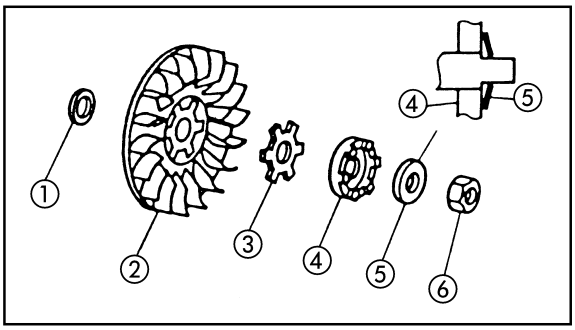

6. Install:
   - shim ①
   - primary fixed sheave ②
   - special washer ③
   - one-way clutch ④
   - conical spring washer ⑤
   - nut ⑥

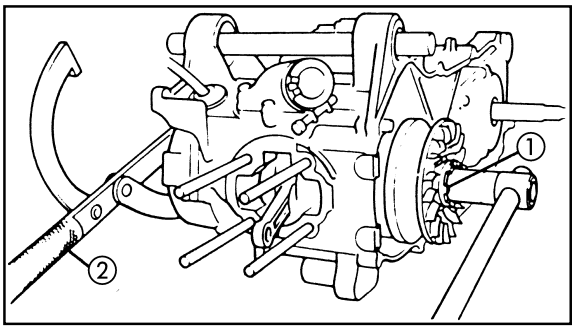

7. Tighten:
   - nut ① (primary sheave)

	Nut (Primary sheave) **33 Nm (3.3 m • kg)**

NOTE:

When the nut is tightened (primary sheave), support the magnetic flywheel using the engine wheel support tool ②.

	Flywheel holding **90890-01235**

Downloaded from www.Manualslib.com manuals search engine

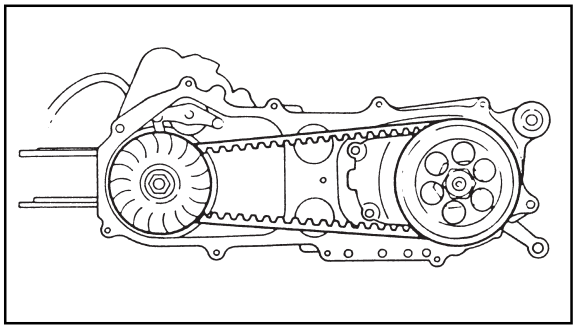

8. Adjust:
   - v-belt
     Tense the V-belt by turning the primary sheave several times.
9. Install:
   - fan (CS50 only)
     Side right

	Screw (fan) **7 Nm (0.7 m • kg)**

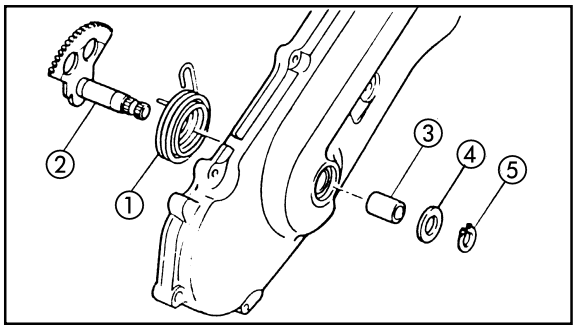

INSTALLING THE KICKSTARTER

1. Install:
   - return spring ①
   - kick shaft ②
   - collar ③
   - flat washer ④
   - circlip ⑤

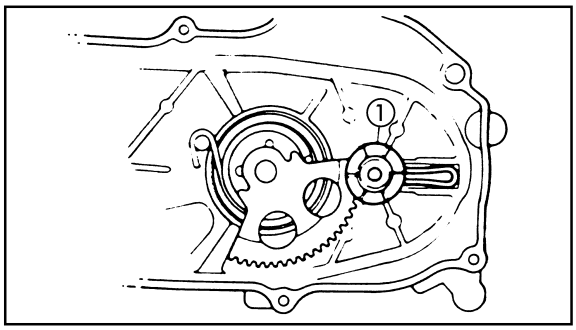

2. Hook on:
   - return spring
     (on kick gear and hub)
3. Install:
   - kick pinion gear ①

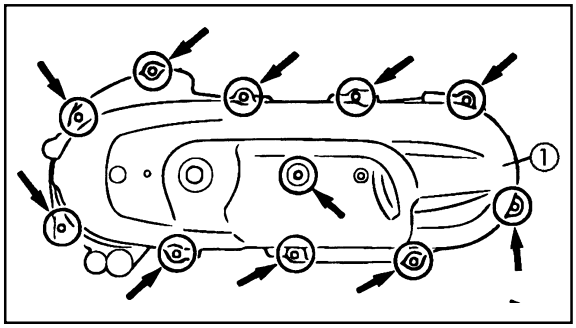

4. Install:
   - crankcase cover ①

	Screw (crankcase cover) **9 Nm (0.9 m • kg)**

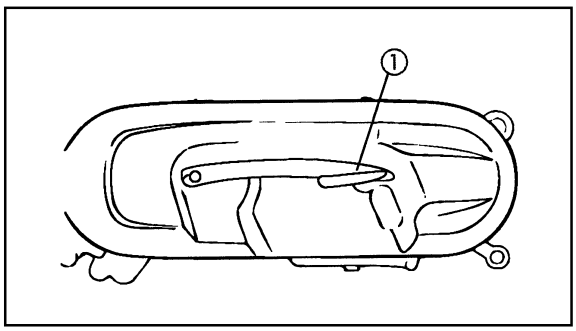

5. Install:
   - kick crank ①

	Bolt (kick crank) **10 Nm (1.0 m • kg)**

Downloaded from www.Manualslib.com manuals search engine

PISTON, CYLINDER AND CYLINDER HEAD (CS50 A/C)

① Carburetor joint
② Reed valve
③ Gasket
④ Cylinder head
⑤ Cylinder head gasket
⑥ Cylinder
⑦ Cylinder gasket
⑧ Piston rings
⑨ Piston
⑩ Piston pin
⑪ Piston pin clips
⑫ Bearing

CS50

Piston-to-cylinder clearance: **0.034 ~ 0.047 mm** **<Limit>: 0.1 mm**
End gap (installed): **Top ring** **0.15 ~ 0.35 mm** **<Limit>: 0.60 mm** **Second ring** **0.15 ~ 0.35 mm** **<Limit>: 0.60 mm**
Ring side clearance: **Top ring** **0.03 ~ 0.05 mm** **Second ring** **0.03 ~ 0.05 mm**
Spark plug: **Type / manufacturer: BR8HS/NGK** **Spark plug gap: 0.6 ~ 0.7 mm**

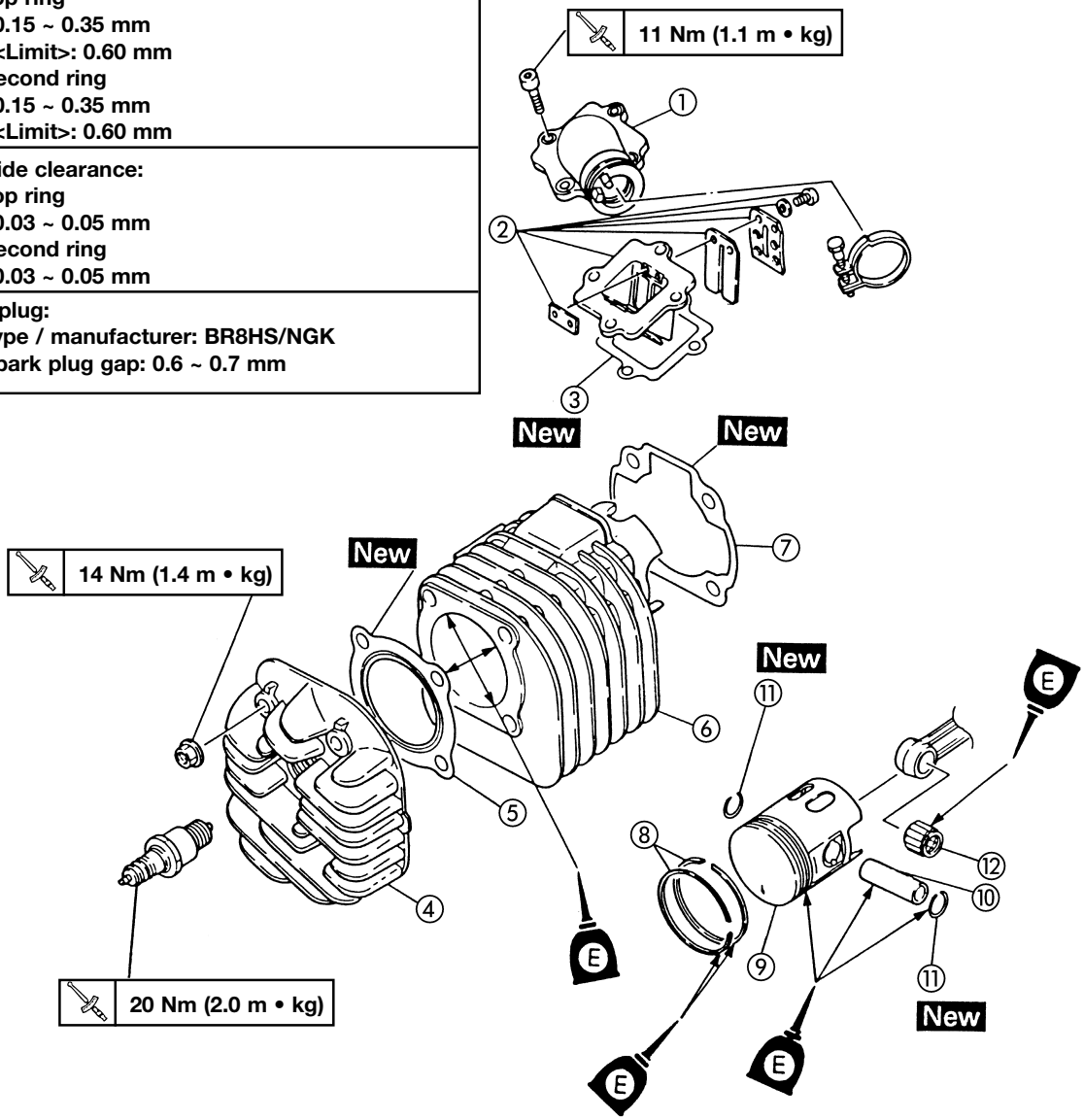

Downloaded from www.Manualslib.com manuals search engine

PISTON, CYLINDER AND CYLINDER HEAD (CS50Z L/C)

① Carburetor joint
② Reed valve
③ Gasket
④ Cylinder head
⑤ Cylinder head gaskets
⑥ Cylinder
⑦ Cylinder gasket
⑧ Piston rings
⑨ Piston
⑩ Piston pin
⑪ Piston pin clips
⑫ Bearing
⑬ Thermo switch
⑭ Thermostat

CS50Z

Piston-to-cylinder clearance: **0.029 ~ 0.042 mm** **<Limit>: 0.1 mm**
End gap (installed): **Top ring** **0.15 ~ 0.35 mm** **<Limit>: 0.60 mm** **Second ring** **0.15 ~ 0.35 mm** **<Limit>: 0.60 mm**
Ring side clearance: **Top ring** **0.03 ~ 0.05 mm** **Second ring** **0.03 ~ 0.05 mm**
Spark plug: **Type / manufacturer: BR8HS/NGK** **Spark plug gap: 0.6 ~ 0.7 mm**

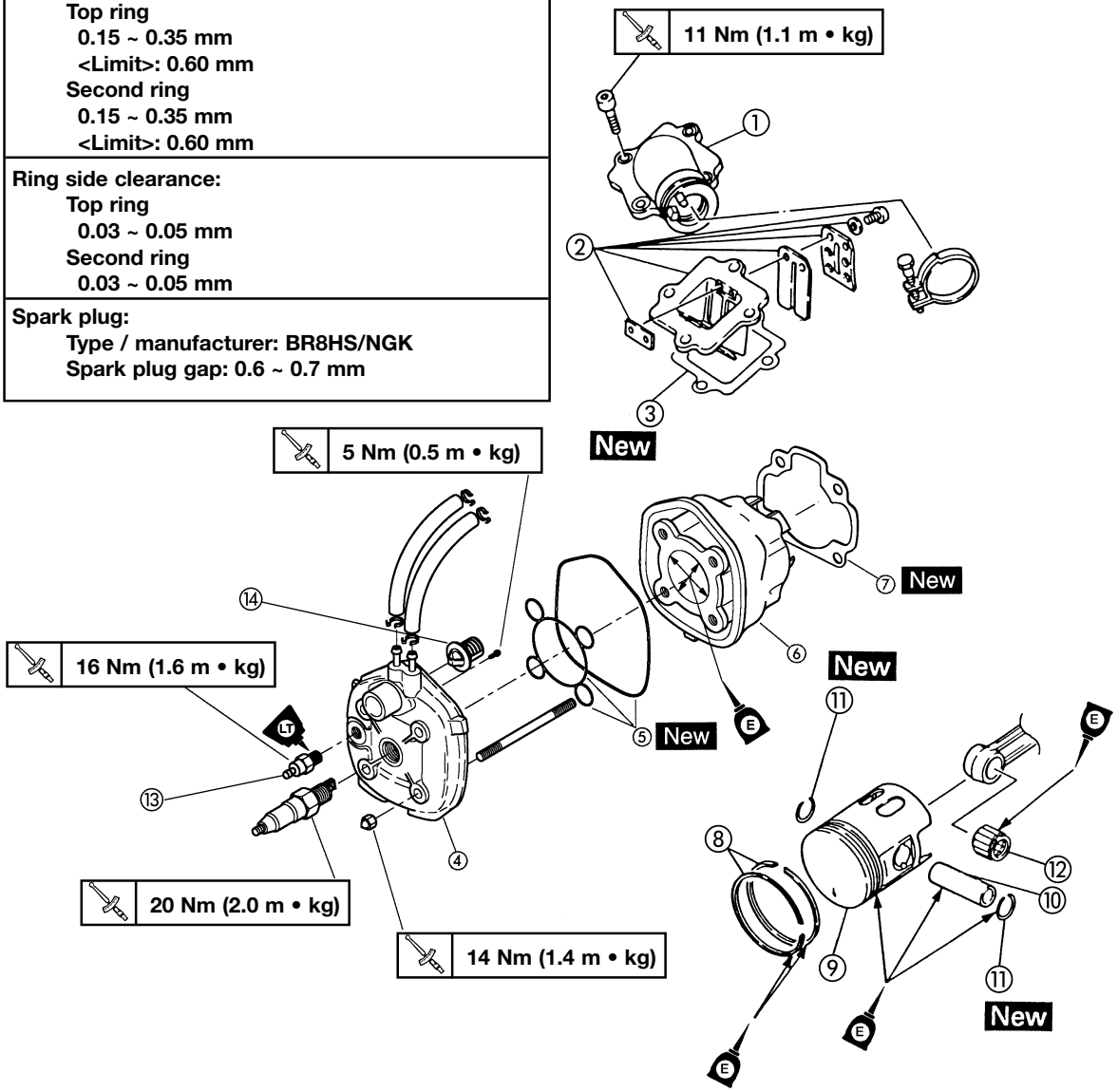

Downloaded from www.Manualslib.com manuals search engine

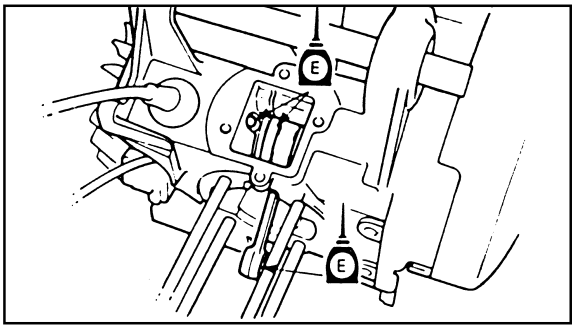

PISTON AND PISTON PIN

1. Apply:
   - engine oil
     (in the crankshaft bearing, big end bearing, small end bearing, piston pin, piston ring grooves and piston skirt areas).

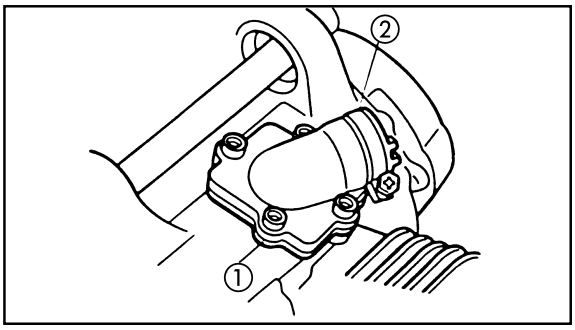

2. Install:
   - reed valve gasket
   - reed valve ①
   - carburetor joint ②

	Carburetor joint **9 Nm (0.9 m • kg)**

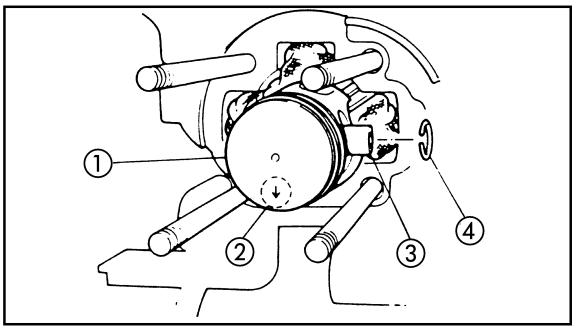

3. Install:
   - small end bearing
   - piston ①
   - piston pin ③
   - piston circlips ④

NOTE:

- The arrow ② of the piston should point to the exhaust side.
- Before installing the piston circlip, cover the crankcase with a towel or clean cloth so that the circlip and other materials do not accidentally fall into the crankcase.
- Always use new piston circlips.

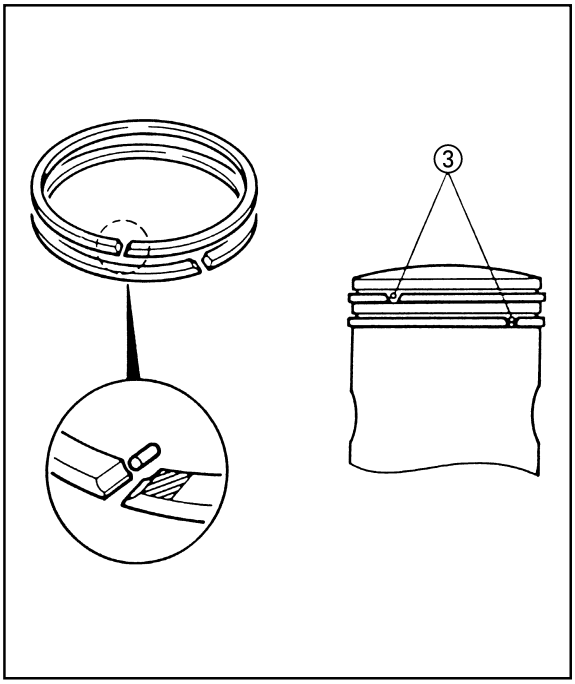

CYLINDER AND CYLINDER HEAD

1. Install:
   - cylinder gasket (Use a new gasket)
2. Check:
   - piston rings

NOTE:

- Ensure that the ends of the rings are correctly coupled around the centring devices ③ on the piston grooves.

Downloaded from www.Manualslib.com manuals search engine

- Check that the manufacturers symbols or numbers printed on the rings are on the upper side.

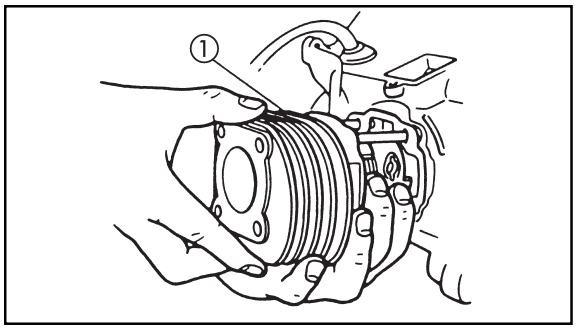

3. Intall:
   - cylinder 1

NOTE:

Install the cylinder with one hand while compressing the piston rings with the other.

- coolant pipe (CS50Z only)

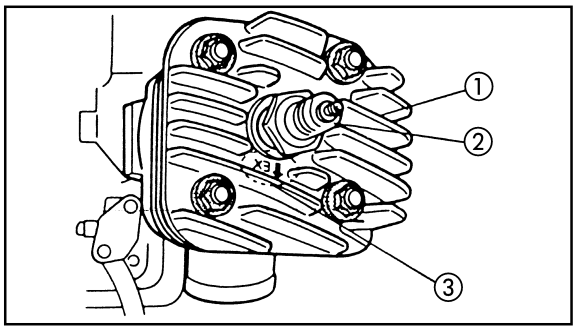

4. Install:
   - cylinder head gasket (new gasket)
5. Install:
   - thermostat (CS50Z only) on cylinder head

	5 Nm (0.5 m • kg)

   - cylinder head 1
   - spark plug 2
   - air covers (CS50 only)

NOTE:

- The arrow 3 "EX" from the cylinder head should point to the exhaust side.
- Tighten the cylinder head positioning nuts in several steps, using a *cris-cross pattern.*

- right crankcase cover (CS50Z only)

	Cylinder head positioning nuts **14 Nm (1.4 m • kg)** **Spark plug** **20 Nm (2.0 m • kg)** **Thermo switch (CS50Z only)** **16 Nm (1.6 m • kg)**

Downloaded from www.Manualslib.com manuals search engine

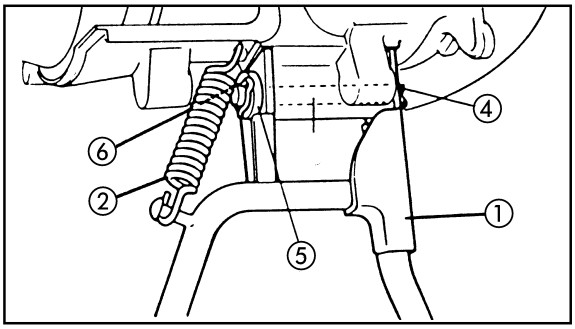

6. Install:
   - central stand ①
   - spring ②
   - axle ③
   - clasp ④
   - rubber washer ⑤
   - strap loop ⑥

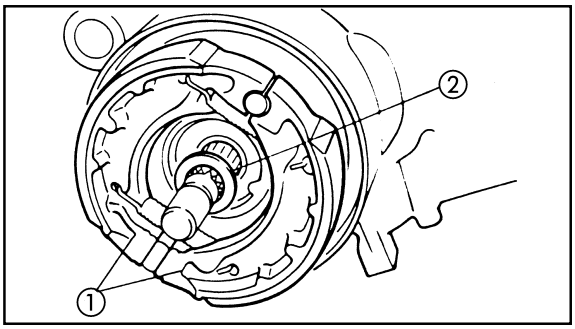

7. Install:
   - brake shoes ①
   - flat washer ②
   - rear wheel
   - rear brake cable

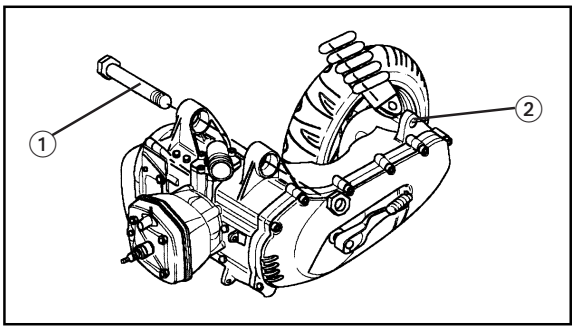

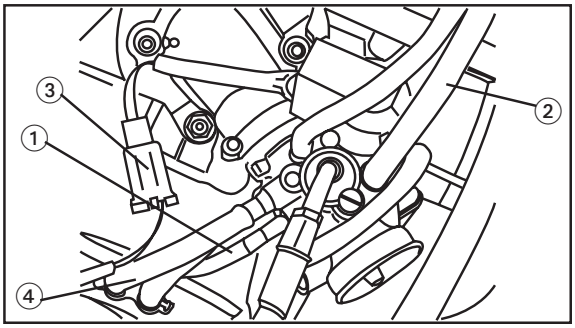

ENGINE REMOUNTING

When the engine is being assembled, reverse the removal procedure.

1. Install:
   - engine assembly bolt ①
   - rear shock absorber bolt ② (lower)

	Engine mounting bolt **84 Nm (8.4 m • kg)** **Rear shock absorber bolt (lower)** **18 Nm (1.8 m • kg)**

2. Install:
   - carburetor
   - oil supply pipe ①
   - fuel pipe ②
   - autochoke lead ③
   - air filter box assembly
   - water pipes of carburator ④ (CS50Z only)

NOTE:

- Align the projection of the carburetor with the projections of the carburator joint.
- Before installing the oil supply pipe, fill it with oil.

3. Install:
   - oil pipe (oil tank)
   - head cylinder coolant pipe (CS50Z only)
   - spark plug cap

NOTE:

Pass the oil supply pipe and the oil pipe through as shown.

Downloaded from www.Manualslib.com manuals search engine

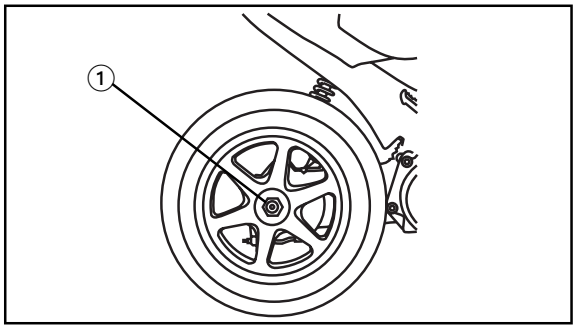

4. Bleed the air:
   - autolubrication pump
     Refer to chapter 3, “BLEEDING OF AIR FROM THE AUTOLUBRICATION PUMP” section.
5. Tighten:
   - rear wheel axle nut ①

NOTE:

When the rear wheel axle nut is tightened, apply the rear brake.

	Rear wheel axle bolt **125 Nm (12.5 m • kg)**

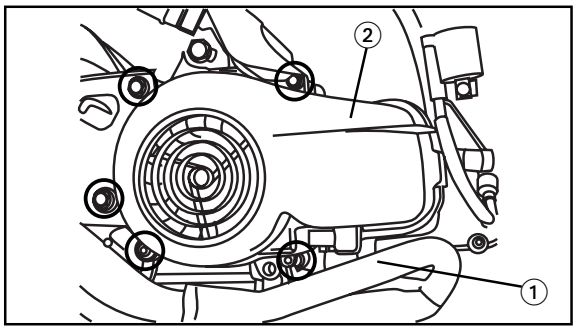

6. Install:
   - muffler ①
   - fan cover ② (CS50 only)

	Bolt (muffler) **26 Nm (2.6 m • kg)** **Bolt (exhaust pipe)** **9 Nm (0.9 m • kg)**

   - coolant hose (on water pump cover) (CS50Z only)
     Refill coolant and bleed the air.
     Refer to chapter 5.

7. Apply:
   - transmission oil
     Refer to “CHANCHING TRANSMISSION OIL” in chapter 3.

8. Adjust:
   - free play of brake levers
     Refer to “ADJUSTMENT OF FREE PLAY OF FRONT/REAR BRAKE LEVER” in chapter 3.
   - free play of throttle cable
     Refer to “ADJUSTMENT OF FREE PLAY OF ACCELERATOR CABLE” in chapter 3.

9. Install:
   - helmet box
   - center cover
     Refer to “REAR BODYWORK, MUD-GUARD” in chapter 3.

Downloaded from www.Manualslib.com manuals search engine

Downloaded from www.Manualslib.com manuals search engine

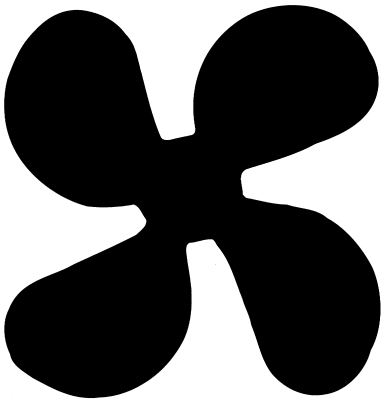

COOL 5

Downloaded from www.Manualslib.com manuals search engine

CHAPTER 5
COOLING SYSTEM (CS50Z only)

RADIATOR AND WATER PUMP 5-1
REMOVING THE RADIATOR 5-2
REMOVING THE WATER PUMP 5-2
CHECKING THE RADIATOR 5-3
CHECKING THE WATER PUMP 5-3
INSTALLING THE WATER PUMP 5-4
INSTALLING THE RADIATOR.....5-5

THERMOSTAT 5-5
REMOVING THE THERMOSTAT 5-5
CHECKING THE THERMOSTAT 5-6
INSTALLING THE THERMOSTAT 5-6

Downloaded from www.Manualslib.com manuals search engine

EAS00454

COOLING SYSTEM (CS50Z only)

RADIATOR AND WATER PUMP

1. Radiator
2. Radiator inlet hose
3. Radiator outlet hose
4. Carburetor inlet hose
5. Carburetor outlet hose
6. Impeller
7. Water pump cover
8. Water pump outlet hose
9. O-ring
10. Reservoir tank
11. Reservoir tank hose
12. Thermostatic valve
13. Thermo switch

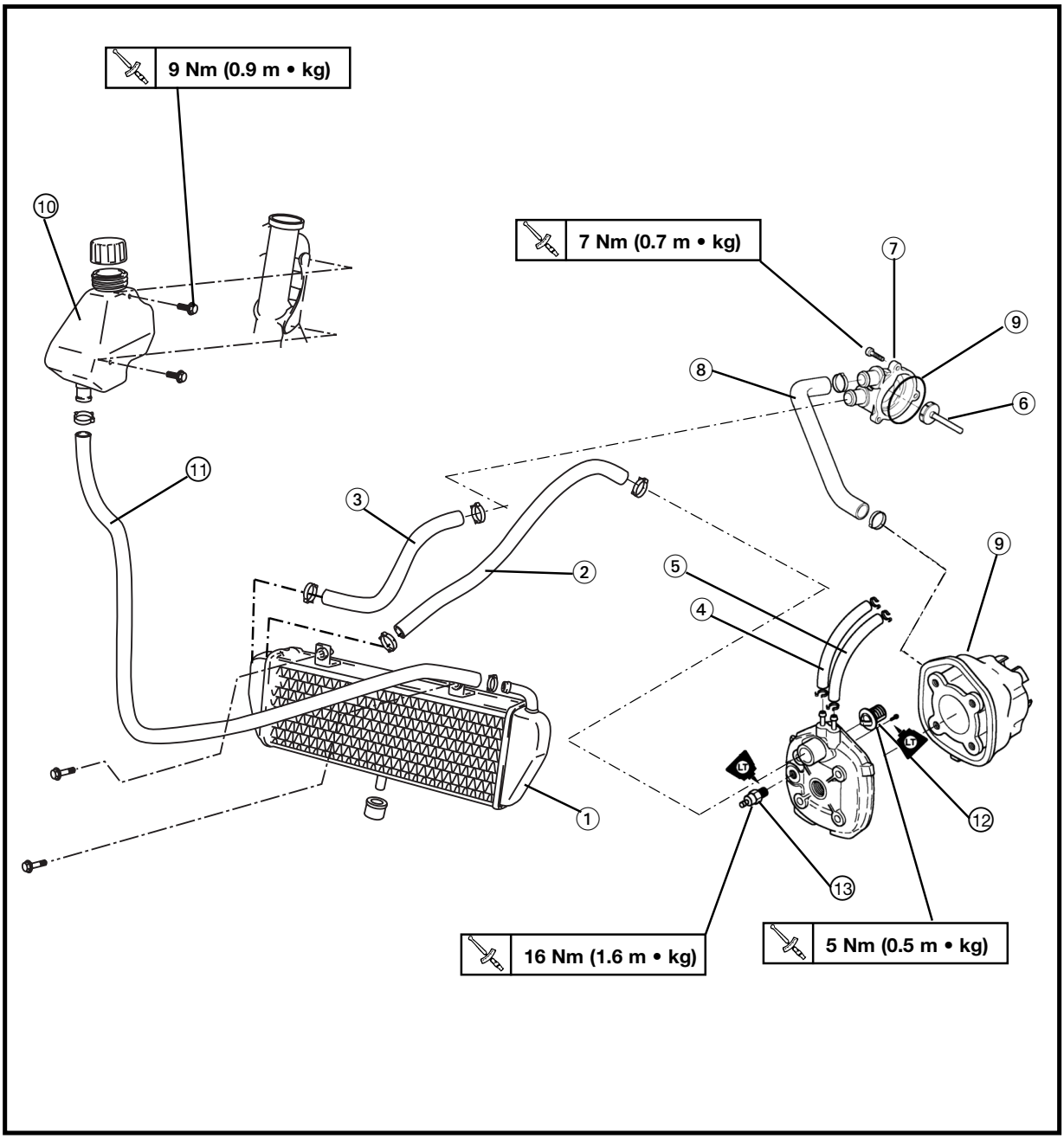

Downloaded from www.Manualslib.com manuals search engine

REMOVING THE RADIATOR

1. Remove:
   - front upper cowling
   - front middle cowling
   - front lower cowling
     Refer to "FRONT COWLING AND FOOTREST" in chapter 3.
2. Drain:
   - coolant (from cooling system)
     Refer to "CHANGING THE COOLANT" in chapter 3.
3. Remove:
   - hose clamp ①

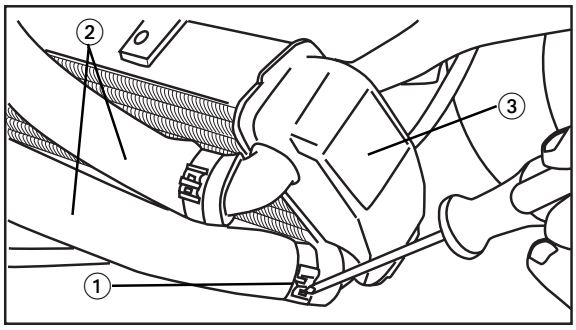

NOTE:

Remove the hose clamp with a thin flatted-head screwdirver.

4. Remove:
   - radiator hoses ②
   - radiator ③

EAS00470

REMOVING THE WATER PUMP

1. Drain:
   - coolant (from cooling system)
     Refer to "CHANGING THE COOLANT" in chapter 3.
2. Remove:
   - water pump cover ①
   - crankcase cover ② (right)

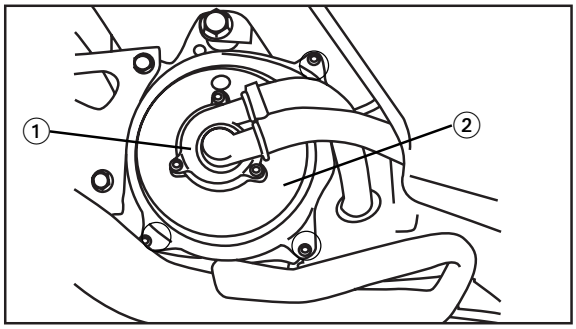

3. Remove:
   - circlip ①
   - water pump drive pulley ②
   - pin ③
   - impeller
4. Remove:
   - bearings ④

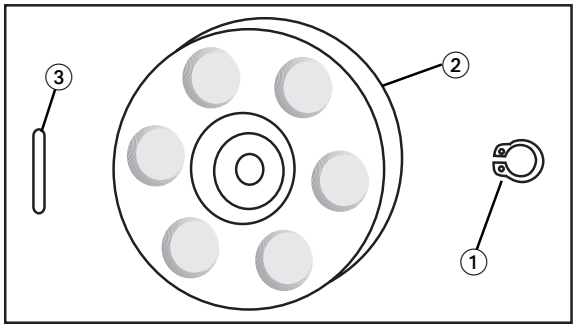

NOTE:

Remove the bearing and oil seal from the outside of the crankcase cover (right).

5. Remove:
   - water pump seal ⑤

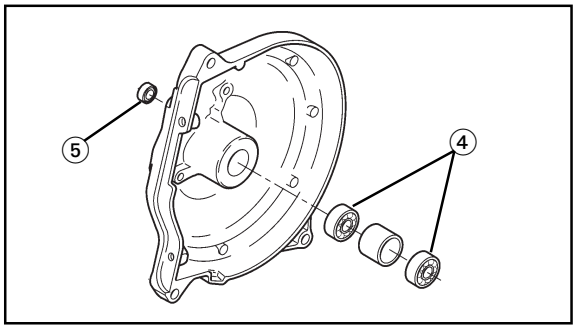

NOTE:

Remove te water pump seal from the inside of the crankcase cover (right)

Downloaded from www.Manualslib.com manuals search engine

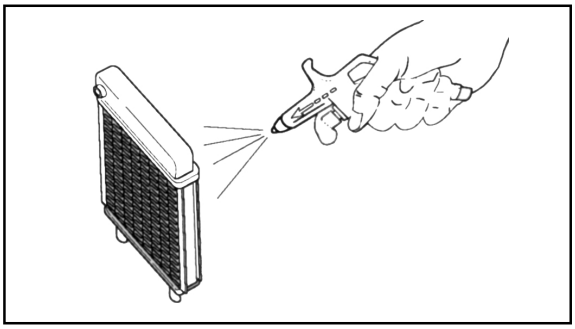

EAS00455

CHECKING THE RADIATOR

1. Check:
   - radiator fins
     Obstruction → Clean.
     Apply compressed air to the rear of the radiator.
     Damage → Repair or replace.

NOTE:

Straighten any flattened fins with a thin, flathead screwdriver.

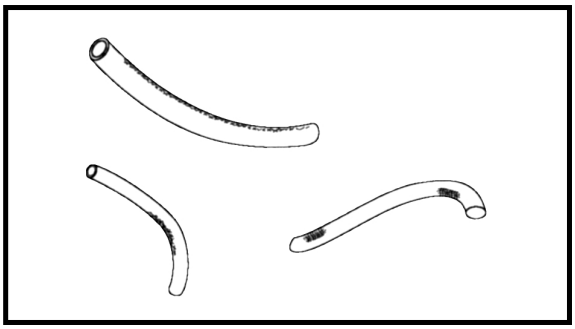

2. Check:
   - radiator hoses
   - radiator pipes
     Cracks/damage → Replace.

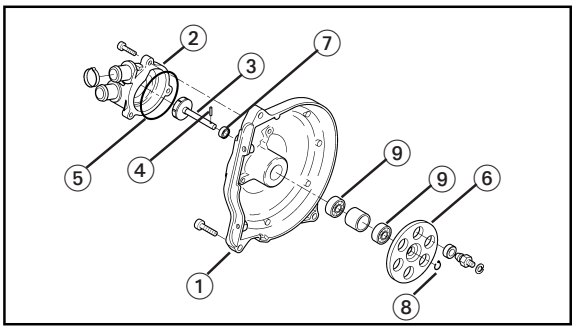

EAS00473

CHECKING THE WATER PUMP

1. Check:
   - crankcase cover (right) ①
   - water pump cover ②
   - impeller ③
   - pin ④
   - o-ring ⑤
   - water pump drive pulley ⑥
   - water pump seal ⑦
     Cracks/damage/wear → Replace.
   - circlip ⑧
2. Check:
   - bearings ⑨
     Rough movement → Replace.

Downloaded from www.Manualslib.com manuals search engine

EAS00477

INSTALLING THE WATER PUMP

NOTE:

Always replace the entire water pump assembly.

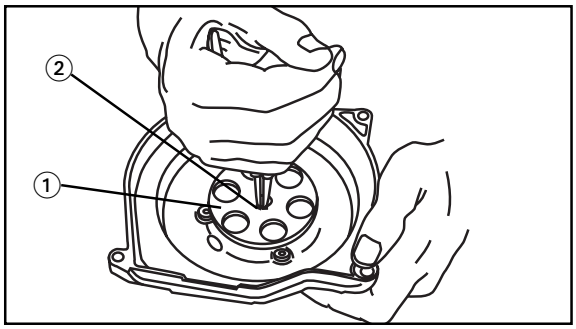

1. Install:
   - impeller
   - pin
   - water pump drive pulley ①
   - circlip New ②

NOTE:

After installation, check that the impeller shaft rotates smoothly.

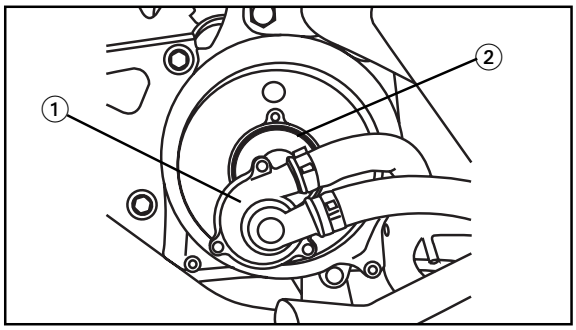

2. Install:
   - crankcase cover (right)
3. Install:
   - o-ring New ②

NOTE:

Lubricate the O-ring with a thin coat of lithium-soap-based grease.

4. Install:
   - water pump cover ①

	7 Nm (0.7 m • kg)

Downloaded from www.Manualslib.com manuals search engine

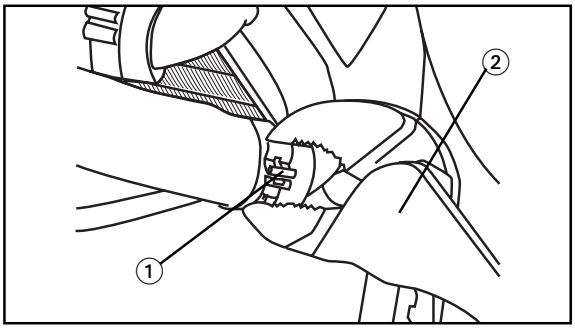

EAS00456

INSTALLING THE RADIATOR

1. Install:
   - hose clamp ①

NOTE:

Install the hose clamp with a pliers ②.

2. Fill:
   - cooling system
     (with the specified amount of the recommended coolant)
     Refer to “CHANGING THE COOLANT” in chapter 3.
2. Check:
   - cooling system
     Leaks → Repair or replace any faulty part.

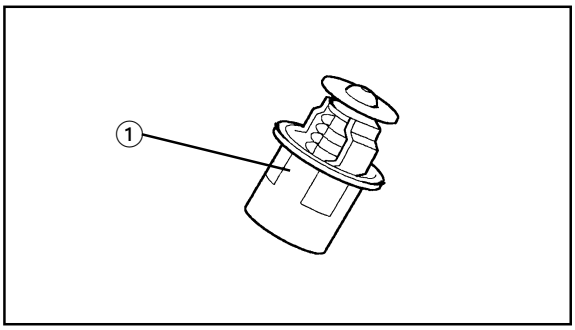

THERMOSTAT

REMOVING THE THERMOSTAT

1. Drain:
   - coolant
     Refer to “CHANGING COOLANT” in chapter 3.
2. Remove:
   - cylinder head
   - thermostat ①

Downloaded from www.Manualslib.com manuals search engine

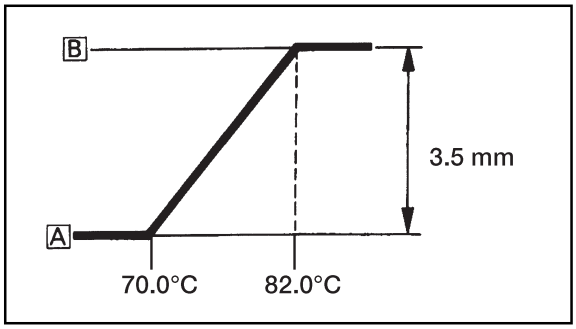

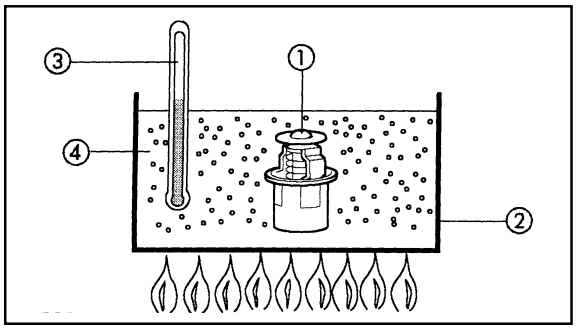

EAS00462

CHECKING THE THERMOSTAT

1. Check:
   - thermostat
     Does not open at 70.0°C ~ 82.0°C → Replace.

▼▼▼▼▼▼▼▼▼▼▼▼▼▼▼▼▼▼▼▼▼▼▼▼▼▼▼▼▼▼▼▼▼▼▼▼

a. Suspend the thermostat in a container filled with water.
b. Slowly heat the water.
c. Place a thermometer in the water.
d. While stirring the water, observe the thermostat and thermometer's indicated temperature.

▲▲▲▲▲▲▲▲▲▲▲▲▲▲▲▲▲▲▲▲▲▲▲▲▲▲▲▲▲▲▲▲▲▲▲▲

1 Thermostat
2 Container
3 Thermometer
4 Water
A Fully closed
B Fully open

NOTE:

If the accuracy of the thermostat is in doubt, replace it. A faulty thermostat could cause serious overheating or overcooling.

EAS00466

INSTALLING THE THERMOSTAT

1. Install:
   - thermostat — 5 Nm (0.5 m • kg)
   - cylinder head
2. Fill:
   - cooling system
     (with the specified amount of the recommended coolant)
     Refer to "CHANGING THE COOLANT" in chapter 3.
3. Check:
   - cooling system
     Leaks → Repair or replace any faulty part.

Downloaded from www.Manualslib.com manuals search engine

Downloaded from www.Manualslib.com manuals search engine

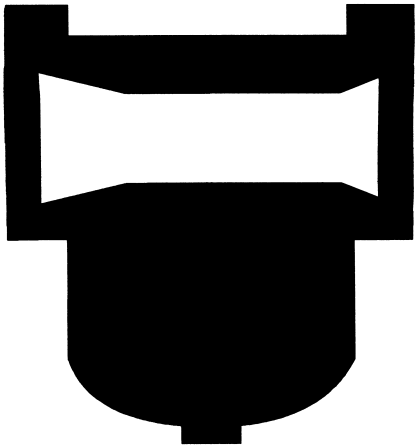

CARB 6

Downloaded from www.Manualslib.com manuals search engine

CHAPTER 6
CARBURETOR

CARBURETOR 6-1
REMOVING THE CARBURETOR 6-2
DISASSEMBLING THE CARBURETOR 6-2
CHECKING THE CARBURETOR 6-3
ASSEMBLING THE CARBURETOR 6-5
CHECKING THE AUTOCHOKE UNIT 6-6
INSTALLING THE CARBURETOR.....6-7

FUEL COCK 6-7
CHECKING THE FUEL COCK 6-7

REED VALVE 6-8
REMOVING THE REED VALVE 6-8
CHECKING THE REED VALVE 6-8
INSTALLING THE REED VALVE.....6-9

Downloaded from www.Manualslib.com manuals search engine

EAS00480

CARBURETOR

CARBURETOR

① Throttle valve spring
② Spring catch
③ Throttle valve
④ Jet needle
⑤ Pilot air screw
⑥ Throttle stop screw
⑦ Needle jet
⑧ Main jet
⑨ Pilot jet
⑩ Float
⑪ Float gasket
⑫ Drain screw
⑬ Needle valve
⑭ Float chamber

Main jet: #65
Jet needle A20 - $^{3}/_{5}$, A35 - $^{4}/_{5}$ (CS50Z)
Main air jet: ø 2.5
Pilot jet: #36
Starter jet: #50
Pilot air screw: 1 $^{3}/_{4}$ ± $^{1}/_{8}$ (CS50Z), 2 - $^{1}/_{4}$
Idling speed: 1.800 r/min ± 150

carburetor dell'orto (CS50/CS50Z)

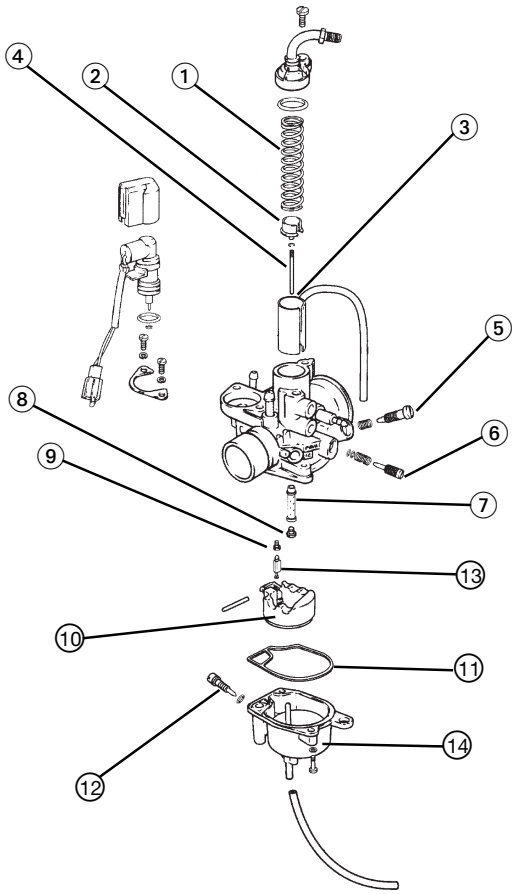

Main jet: #62
Jet needle B10 A - $^{2}/_{3}$
Main air jet: ø 2.0
Pilot jet: #38
Starter jet: #42
Pilot air screw: 1 $^{3}/_{4}$ - 2
Idling speed: 1.800 ± 150 r/min

carburetor gurtner (CS50 only)

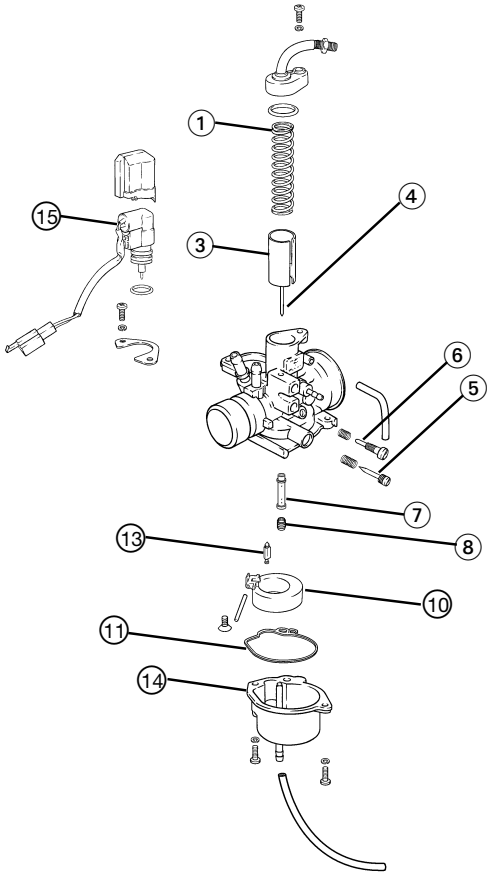

Downloaded from www.Manualslib.com manuals search engine

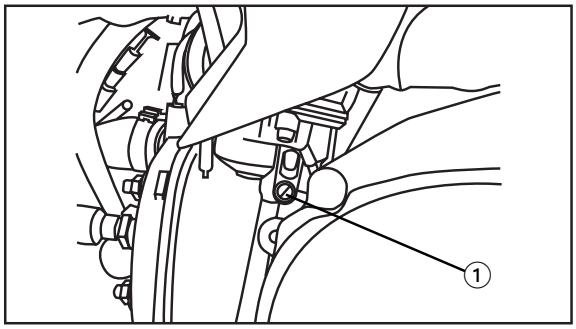

REMOVING THE CARBURETOR

1. Remove:
   - air filter box
   - helmet box
     Refer to “REAR BODYWORK, MUD-GUARD” in chapter 3
2. Drain:
   - fuel (from drain screw 1)
   - coolant
     Refer to “CHANGING THE COOLANT” in chapter 3.

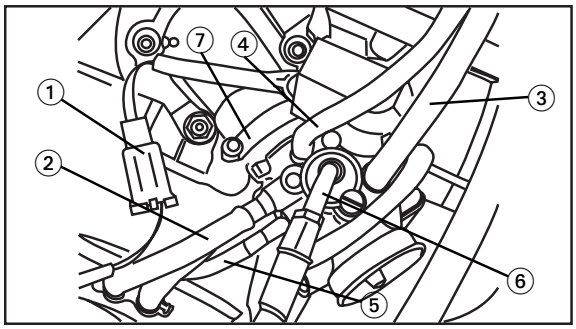

3. Disconnect:
   - autochoke lead coupler 1
   - coolant hoses 2
   - fuel hose 3
   - vacuum hose 4
   - oil delivery hose 5
   - throttle cable (with throttle valve) 6
   - clamp (fixing clip) 7
4. Remove:
   - carburetor

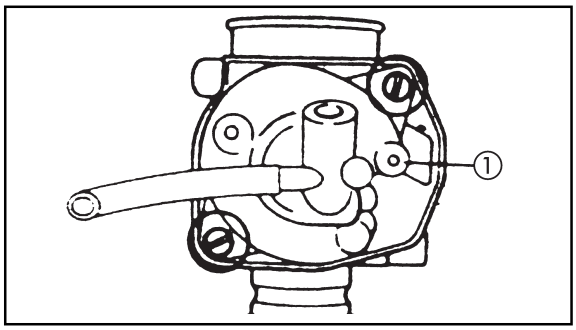

DISASSEMBLING THE CARBURETOR

1. Remove:
   - float chamber 1

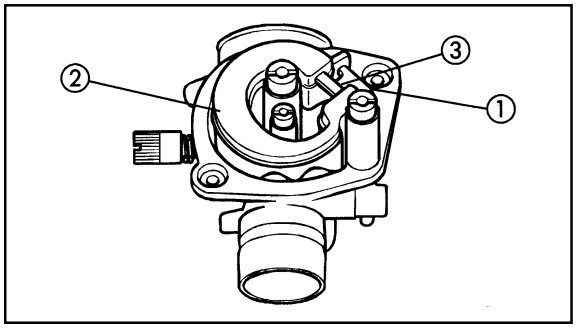

2. Remove:
   - float pin 1
   - float 2
   - needle valve 3

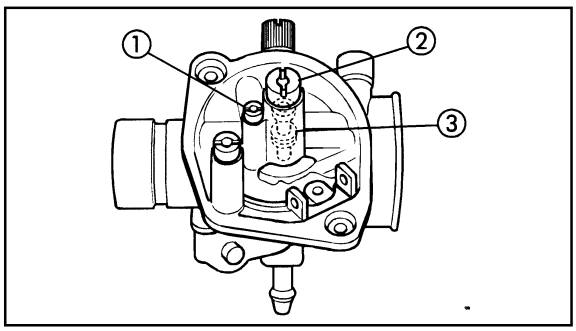

3. Remove:
   - pilot jet 1
   - main jet 2
   - needle jet 3

Downloaded from www.Manualslib.com manuals search engine

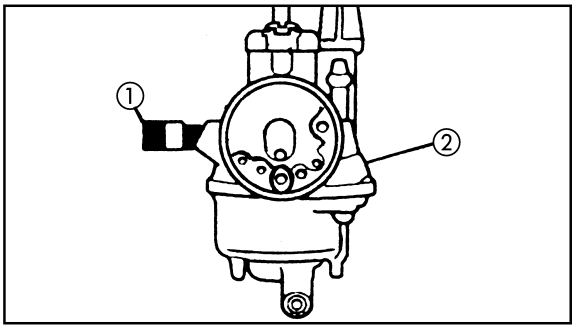

4. Remove:
   - throttle stop screw ① (with spring, washer and o-ring)
   - pilot air screw ② (with spring)

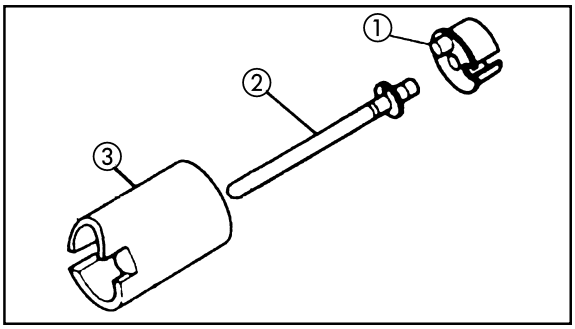

5. Remove:
   - spring seat ①
   - jet needle ②
   - throttle valve ③
   - throttle valve spring

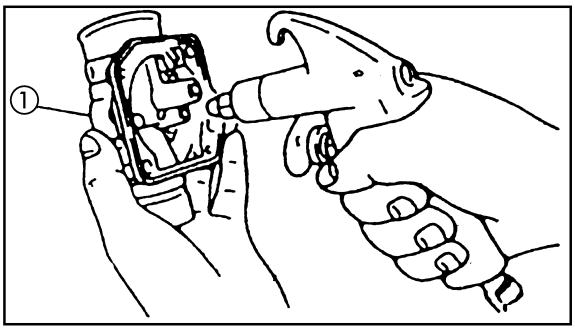

EAS00485

CHECKING THE CARBURETOR

1. Check:
   - carburetor body ①
     Dirty → Clean

NOTE:

For cleaning, use a petrol based solvent. Clean the pipes and jets with compressed air

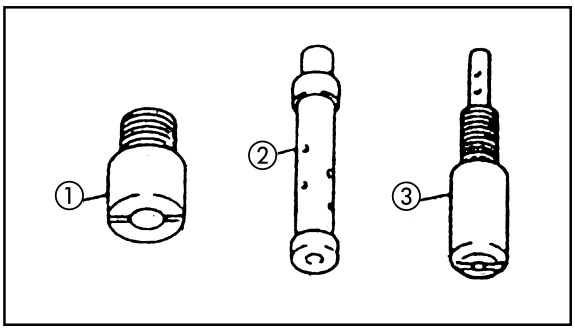

2. Check:
   - main jet ①
   - needle jet ②
   - pilot jet ③
     Dirty → Clean

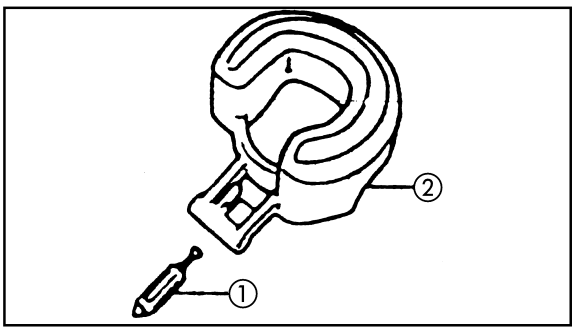

3. Check:
   - needle valve ①
     Wear/Dirty → Clean
   - float ②
     Damage → Change
   - gasket Damage → Change

Downloaded from www.Manualslib.com manuals search engine

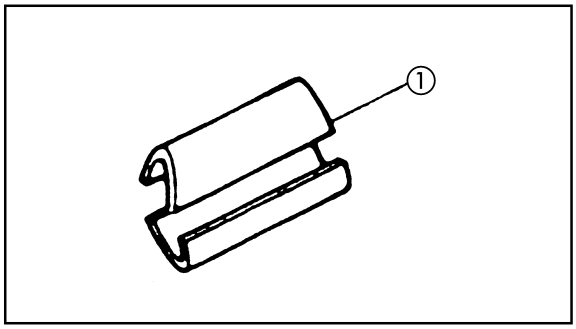

4. Check:
   - throttle valve ①
     Wear/Damage → Change

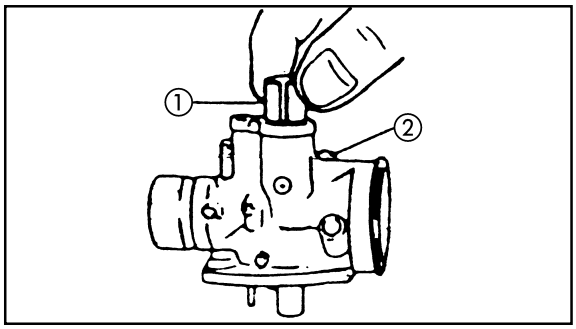

5. Check:
   - throttle valve displacement
     Irregular movement/Catches → Change
     Insert the throttle valve ① in the body ② and check its displacement.

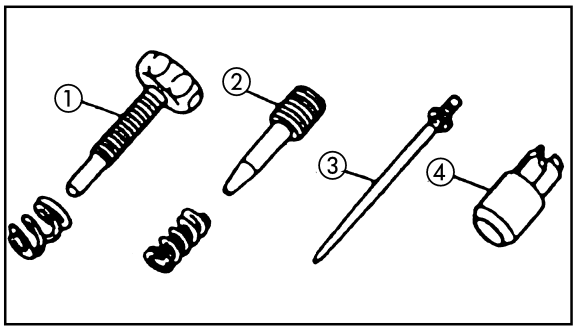

6. Check:
   - throttle stop screw ①
   - pilot air screw ②
   - jet needle ③
   - starter plunger ④
     Wear/Damage → Change

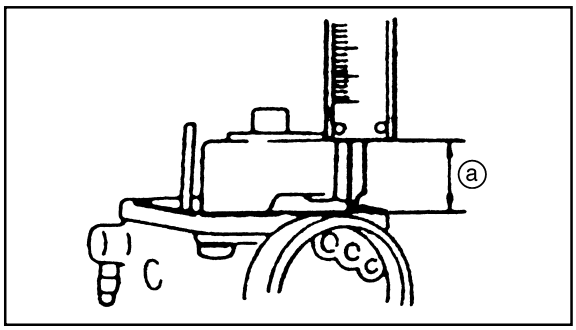

7. Measure:
   - Float height ⓐ
     Outside specifications → Check valve, float and valve seat

	Float height ⓐ **15.0 mm ~ 17.0 mm**

▼▼▼▼▼▼▼▼▼▼▼▼▼▼▼▼▼▼▼▼▼▼▼▼▼▼▼▼▼▼▼▼▼▼

Steps for measuring the height of the float:
- Assemble the valve, float and axle on the carburettor body
- Turn the carburettor upside down
- Using a vernier caliper, measure the distance between the plane of the bowl gasket (without the gasket) and the upper part of the float.

Downloaded from www.Manualslib.com manuals search engine

NOTE:

The arm of the float should be supported on the valve without compressing it.
- If the height of the float is not within the specified limits, inspect the valve and its seat.
- Substitute both parts if any part of them is worn.
- If both are in good condition, replace the float.
- Check the height of the float again.

▲▲▲▲▲▲▲▲▲▲▲▲▲▲▲▲▲▲▲▲▲▲▲▲▲▲▲▲▲▲▲▲

NOTE:

The height of the float is adjusted in the factory. Do not try to modify it under any circumstances.

EAS00487

ASSEMBLING THE CARBURETOR

The assembly of the carburetor is carried out following the reverse procedure to "DISASSEMBLY". Bear in mind the following points:

CAUTION:
- **Before assembling the carburetor, wash all of the parts in a petroleum-based solvent.**
- **Always use new gaskets.**

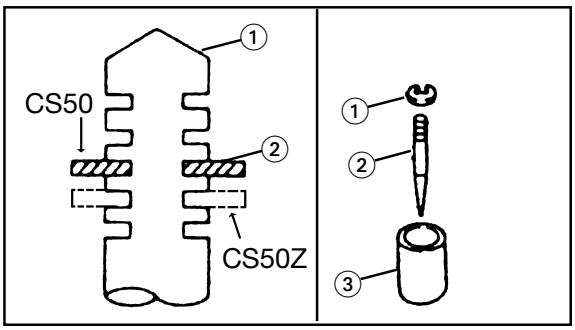

1. Install:
   - jet needle ①
   - clip ②
   - throttle valve ③
   - spring seat
   - spring

Jet needle clip position:
CS50: 3/5 (Dell'orto)
2/3 (Gurtner)
CS50Z: 4/5 (Dell'orto)

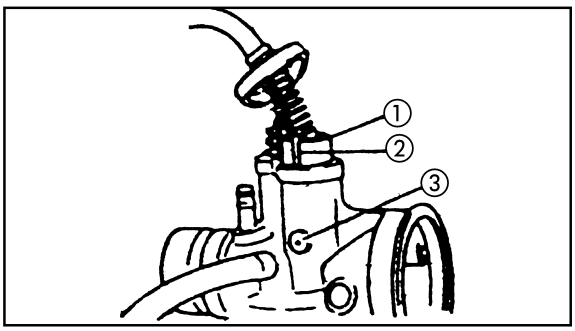

2. Install:
   - throttle valve ①

NOTE:

Align the groove ② with the carburetor projection ③.

Downloaded from www.Manualslib.com manuals search engine

EAS00503
CHECKING THE AUTOCHOKE UNIT

NOTE:

When checking the autochoke unit, the ambient temperature must be lower than 45°C (113°F).

1. Remove:
   - carburetor
2. Check:
   - autochoke unit

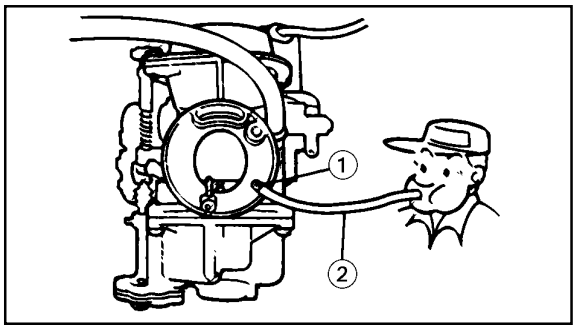

▼▼▼▼▼▼▼▼▼▼▼▼▼▼▼▼▼▼▼▼▼▼▼▼▼▼▼▼▼▼▼▼▼▼

a. Connect a 3.3 mm hose ① to the starter air passage ② and blow into the hose.

NOTE:

When the starter plunger is open, air should come out of the other side of the starter air passage.

Starter plunger opens	**Perform step (3)**
Starter plunger closes	**Replace the autochoke unit.**

▲▲▲▲▲▲▲▲▲▲▲▲▲▲▲▲▲▲▲▲▲▲▲▲▲▲▲▲▲▲▲▲▲▲

3. Check:
   - autochoke unit

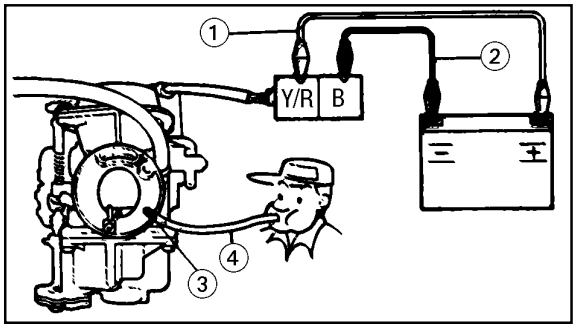

▼▼▼▼▼▼▼▼▼▼▼▼▼▼▼▼▼▼▼▼▼▼▼▼▼▼▼▼▼▼▼▼▼▼

a. Connect the autochoke unit leads to a 12.0 V battery for five minutes.

Positive batter lead ① → yellow/red	
Negtive battery lead ② → black	

b. Connect a 3.3 mm hose ③ to the starter air passage ④ and blow into the hose.

Starter plunger opens	**Replace the autochoke unit.**
Starter plunger closes	**Autochoke is OK.**

▲▲▲▲▲▲▲▲▲▲▲▲▲▲▲▲▲▲▲▲▲▲▲▲▲▲▲▲▲▲▲▲▲▲

Downloaded from www.Manualslib.com manuals search engine

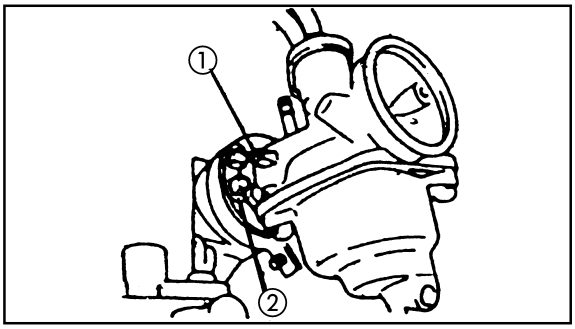

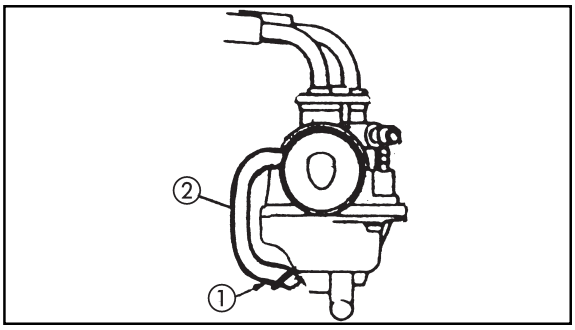

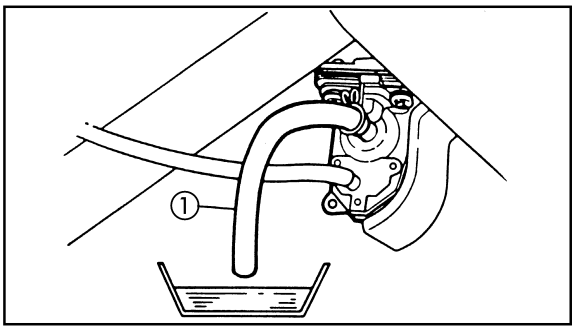

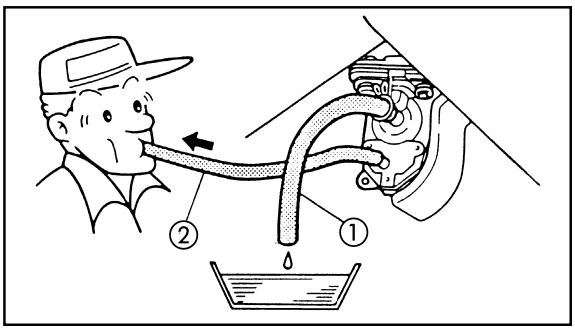

EAS00492

INSTALLING THE CARBURETOR

1. Adjust:
   - engine idling speed

Engine idling speed
1.650 ~ 1.950 r/min (CS50)
1.850 ~ 2.150 r/min (CS50Z)

Refer to “ADJUSTING HE ENGINE IDLING SPEED” in chapter 3.

2. Adjust:
   - throttle cable free play

Throttle cable free play (at the flange of the throttle grip)
2 ~ 5 mm

Refer to “ADJUSTING HE ENGINE IDLING SPEED” in chapter 3.

EAS00505

FUEL COCK

CHECKING THE FUEL COCK

1. Stop the engine.
2. Remove:
   - helmet box
     Refer to chapter 3, “REAR BODYWORK, MUDGUARD” section.
3. Inspect:
   - fuel cock

Steps for inspecting fuel cock:
- Disconnect the fuel hose ①
- Place a receptacle under the end of the fuel hose.
- Disconnect the vacum hose ② and suction to create a vacuum
- If the fuel comes out of the fuel hose as a result of applying a vacuum and stops when the vacuum is stopped, the cock is in good condition. If not, clean or replace the vacuum hose, the fuel hose and cock.

Downloaded from www.Manualslib.com manuals search engine

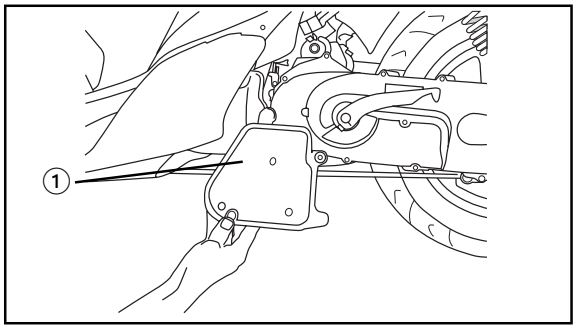

REED VALVE

REMOVING THE REED VALVE

1. Remove:
   - helmet box
     Refer to “REAR BODYWORK, MUD-GUARD” in chapter 3.
   - air filter box assembly ①

2. Remove:
   - carburetor
     See section “REMOVING THE CARBURE-TOR”

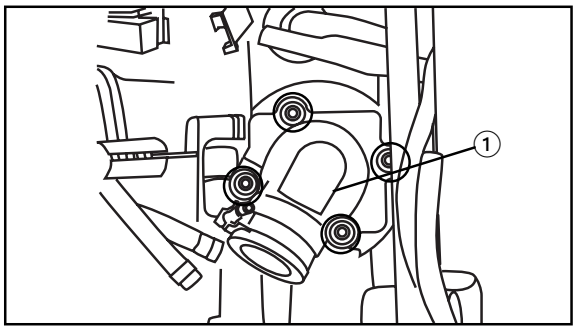

3. Remove:
   - carburetor joint ①
   - reed valve assembly

CHECKING THE REED VALVE

1. Inspect:
   - carburetor joint
     Damage/Cracks → Change
   - reed valve
     Fatigue/Cracks → Change

▼▼▼

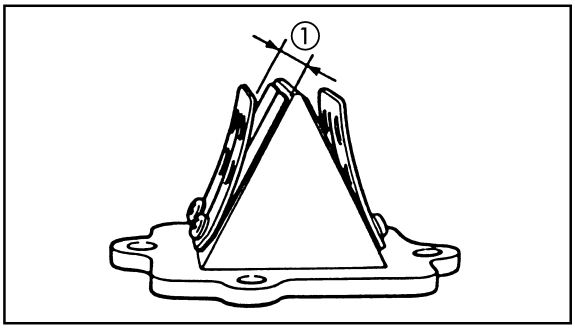

2. Measure:
   - valve stopper height ①
     Out of specification → Adjust the stopper/Replace the valve stopper.

	Height of valve stopper ① **6.0 ~ 6.4 mm**

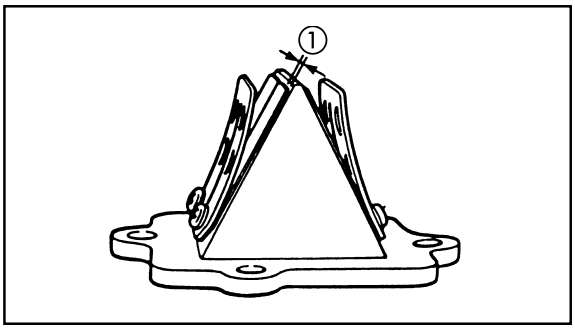

3. Measure:
   - clearance of reed valve ①
     Out of specification → Replace the reed valve.

	Clearance of reed valve ① **Less than 0.2 mm**

INSTALLING THE REED VALVE

When the reed valve assembly is installed, reverse the removal procedure. Bear in mind the following points.

1. Install:
   - gasket New
2. Tighten:
   - tighten the bolts for reed valve

	Reed valve **11 Nm (1.1 m • kg)**

NOTE:

Tighten each bolt gradually to avoid it being deformed.

Downloaded from www.Manualslib.com manuals search engine

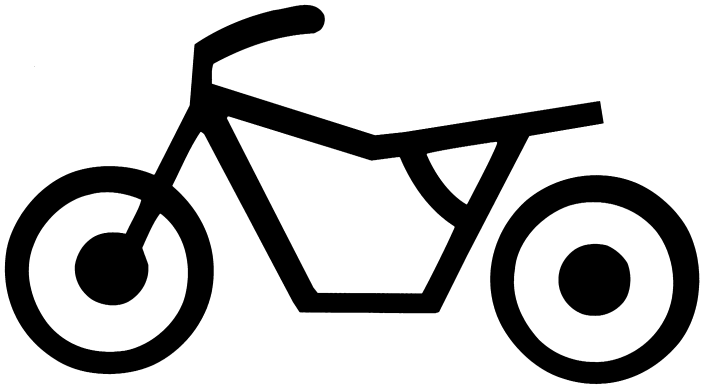

CHAS 7

Downloaded from www.Manualslib.com manuals search engine

CHAPTER 7
CHASSIS

FRONT WHEEL 7-1
REMOVING THE FRONT WHEEL 7-2
CHECKING THE FRONT WHEEL 7-3
CHECKING HE SPEED SENSOR UNIT 7-4
CHECKING THE BRAKE DISC 7-4
INSTALLING THE FRONT WHEEL 7-6

FRONT BRAKE 7-7
REPLACING THE FRONT BRAKE PADS 7-8
REMOVING THE BRAKE HOSE 7-10
CHECKING THE BRAKE HOSE 7-10
INSTALLING THE BRAKE HOSE 7-11

REAR WHEEL 7-13
REMOVING THE REAR WHEEL 7-14
CHECKING THE REAR WHEEL 7-14
ASSEMBLING THE BRAKE SHOES 7-15
INSTALLING THE REAR WHEEL 7-16

FRONT FORK 7-17
REMOVING THE FRONT FORK LEGS 7-18
DISASSEMBLING THE FRONT FORK LEGS 7-18
CHECKING THE FRONT FORK LEGS 7-19
ASSEMBLING THE FRONT FORK LEGS 7-20
INSTALLING THE FRONT FORK LEGS 7-22

HANDLEBAR AND STEERING 7-23
REMOVING THE HANDLEBAR 7-24
REMOVING THE LOWER BRACKET 7-25
CHECKING THE STEERING HEAD 7-26
CHECKING THE HANDLEBAR 7-27
INSTALLING THE STEERING HEAD 7-27
INSTALLING THE HANDLEBAR 7-28

Downloaded from www.Manualslib.com manuals search engine

EAS00518

CHASSIS

FRONT WHEEL

① Wheel axle
② Speed sensor unit
③ Bearing
④ Collar
⑤ Valve
⑥ Tyre
⑦ Front rim
⑧ Oil seal
⑨ Spacer
⑩ Nut

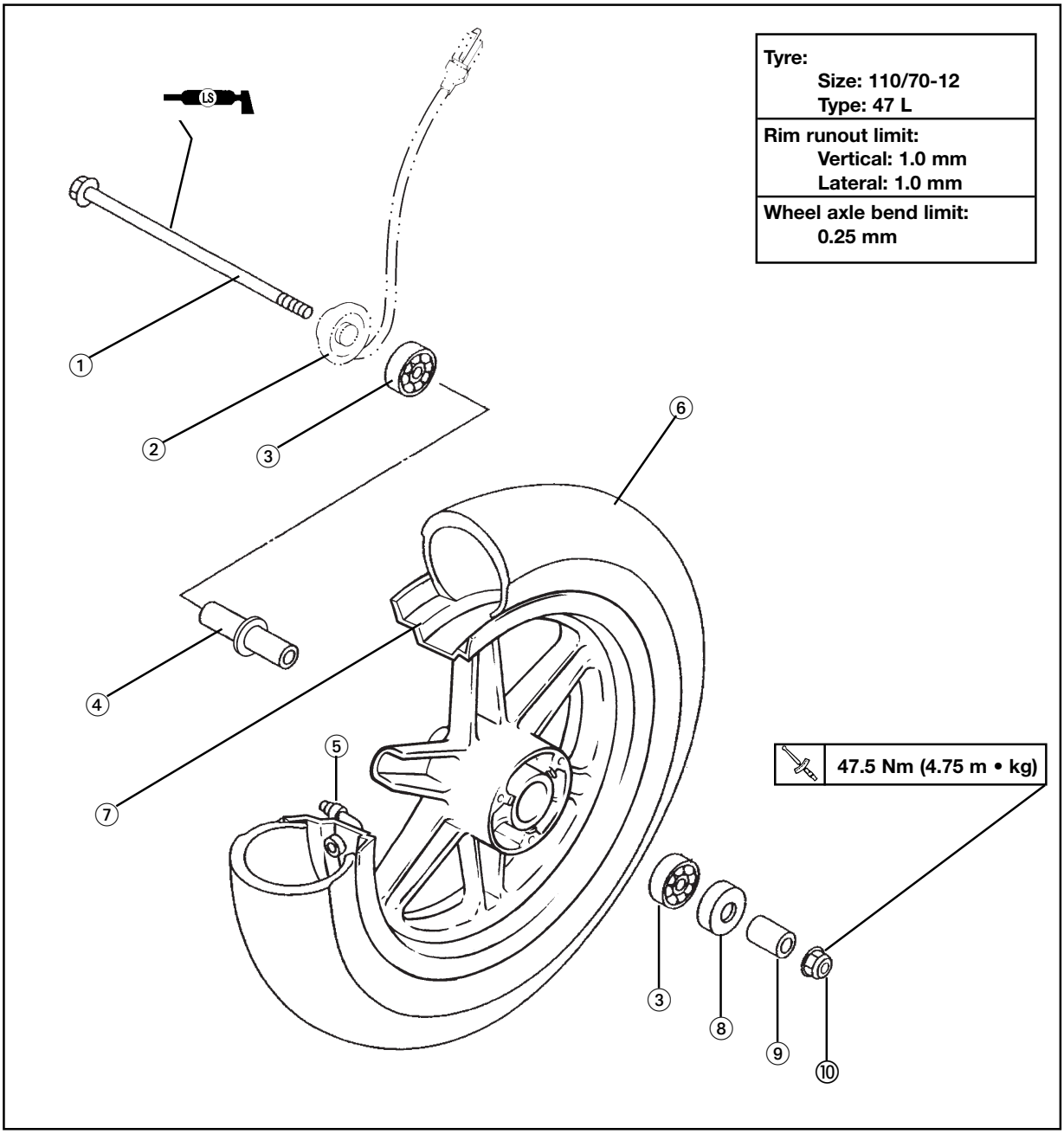

Downloaded from www.Manualslib.com manuals search engine

EAS00520

REMOVING THE FRONT WHEEL

1. Stand the scooter on a level surface.

WARNING

Securely support the scooter so that there is no danger of it falling over.

NOTE:

Place the scooter on a suitable stand so that the front wheel is elevated.

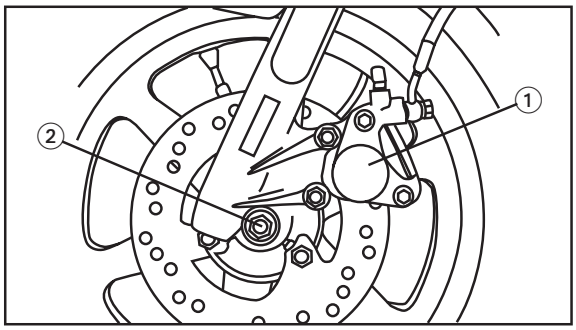

2. Remove:
   - brake caliper ①
   - axle nut ②

NOTE:

Do not apply the brake lever when removing the brake caliper.

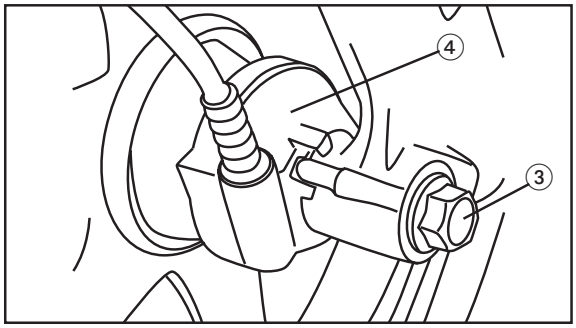

3. Elevate:
   - front wheel

NOTE:

Place the scooter on a suitable stand so that the front wheel is elevated.

4. Remove:
   - axle ③
   - speed sensor unit ④

Downloaded from www.Manualslib.com manuals search engine

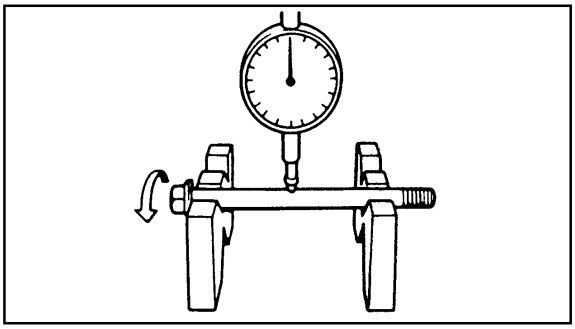

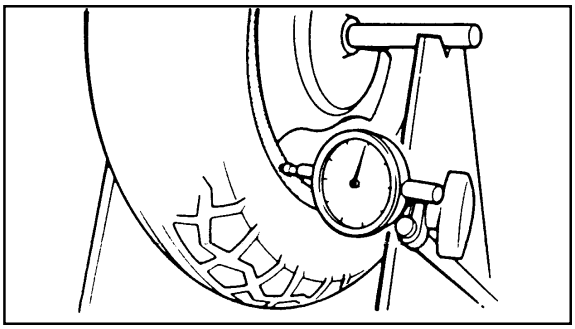

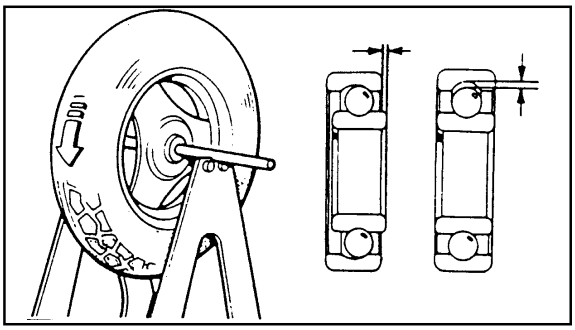

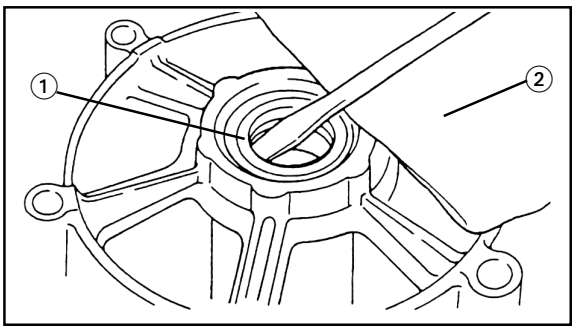

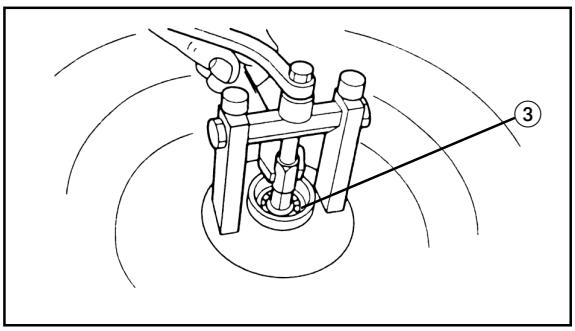

EAS00525

CHECKING THE FRONT WHEEL

1. Check:
   - wheel axle
     Roll the wheel axle on a flat surface.
     Bends → Replace.

⚠ WARNING

Do not attempt to straighten a bent wheel axle.

2. Check:
   - tire
   - front wheel
     Damage/wear → Replace.
     Refer to "CHECKING THE TIRES" and "CHECKING THE WHEELS" in chapter 3.
3. Measure:
   - radial wheel runout
   - lateral wheel runout
     Over the specified limits → Replace.

Rim runout limit
Radial: 1.0 mm
Rim runout limit
Lateral: 1.0 mm

4. Check:
   - wheel bearings
     Front wheel turns roughly or is loose → Replace the wheel bearings.
   - oil seals
     Damage/wear → Replace.
5. Replace:
   - wheel bearings New
   - oil seals New

▼▼▼▼▼▼▼▼▼▼▼▼▼▼▼▼▼▼▼▼▼▼▼▼▼▼▼▼▼▼▼▼▼▼

a. Clean the outside of the front wheel hub.
b. Remove the oil seals ① with a flat-head screwdriver.

NOTE:

To prevent damaging the wheel, place a rag ② between the screwdriver and the wheel surface.

c. Remove the wheel bearings ③ with a general bearing puller.
d. Install the new wheel bearings and oil seals in the reverse order of disassembly.

Downloaded from www.Manualslib.com manuals search engine

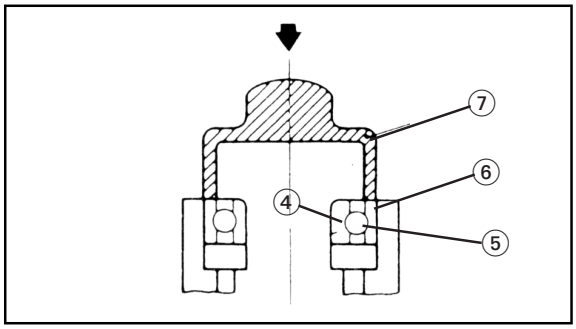

CAUTION:

Do not contact the wheel bearing inner race ④ or balls ⑤. Contact should be made only with the outer race ⑥.

NOTE:

Use a socket ⑦ that matches the diameter of the wheel bearing outer race and oil seal.

EAS00535

CHECKING THE SPEED SENSOR UNIT

1. Check:
   - speedometer sensor
     Bends/damage/wear → Replace.
2. Check:
   - speedometer drive gear
   - speedometer driven gear
     Damage/wear → Replace.

EAS00528

CHECKING THE BRAKE DISC

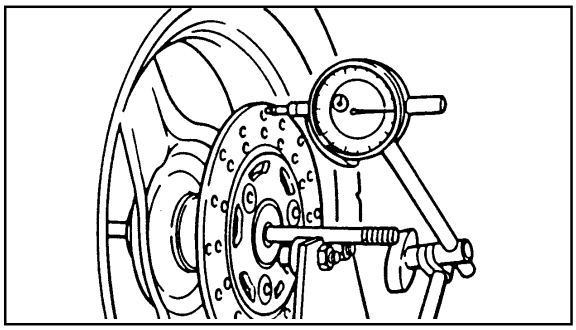

1. Check:
   - brake disc
     Damage/galling → Replace.
2. Measure:
   - brake disc deflection
     Out of specification → Correct the brake disc deflection or replace the brake disc.

Brake disc deflection limit (maximum)
0.25 mm

a. Place the scooter on a suitable stand so that the front wheel is elevated.
b. Before measuring the front brake disc deflection, turn the handlebar to the left or right to ensure that the front wheel is stationary.
c. Remove the brake caliper.
d. Hold the dial gauge at a right angle against the brake disc surface.
e. Measure the deflection below the edge of the brake disc.

Downloaded from www.Manualslib.com manuals search engine

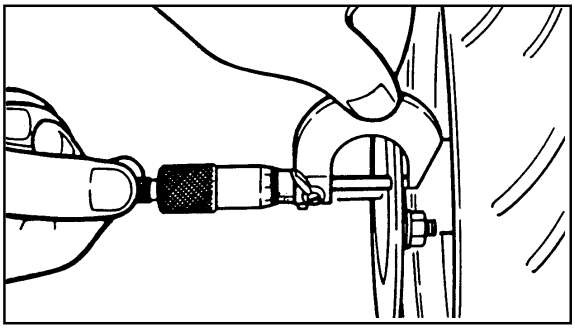

3. Measure:
   - brake disc thickness
     Measure the brake disc thickness at a few different locations.
     Out of specification → Replace.

Brake disc thickness limit (minimum)
3.0 mm

4. Adjust:
   - brake disc deflection

▼▼▼▼▼▼▼▼▼▼▼▼▼▼▼▼▼▼▼▼▼▼▼▼▼▼▼▼▼▼▼▼▼▼

a. Remove the brake disc.
b. Rotate the brake disc by one bolt hole.
c. Install the brake disc.

NOTE:

Tighten the brake disc bolts in stages and in a crisscross pattern.

Brake disc bolt
23 Nm (2.3 m•kg)
LOCTITE®

d. Measure the brake disc deflection.
e. If out of specification, repeat the adjustment steps until the brake disc deflection is within specification.
f. If the brake disc deflection cannot be brought within specification, replace the brake disc.

▲▲▲▲▲▲▲▲▲▲▲▲▲▲▲▲▲▲▲▲▲▲▲▲▲▲▲▲▲▲▲▲▲▲

Downloaded from www.Manualslib.com manuals search engine

EAS00542

INSTALLING THE FRONT WHEEL

1. Lubricate:
   - wheel axle
   - wheel bearings
   - oil seal lips
   - speedometer drive gear
   - speedometer driven gear

	Recommended lubricant **Lithium-soap-based grease**

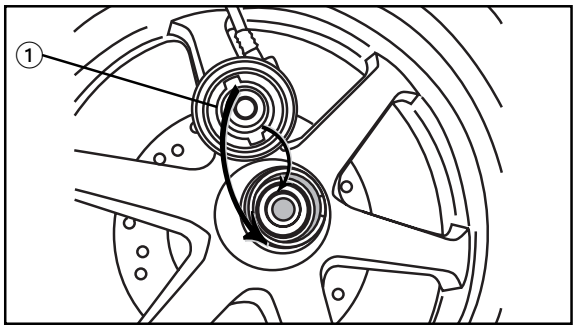

2. Install:
   - speed sensor unit (1)

NOTE:

Make sure the speed sensor unit and the wheel hub are installed with the two projections engaged into the flat surface of the wheel.

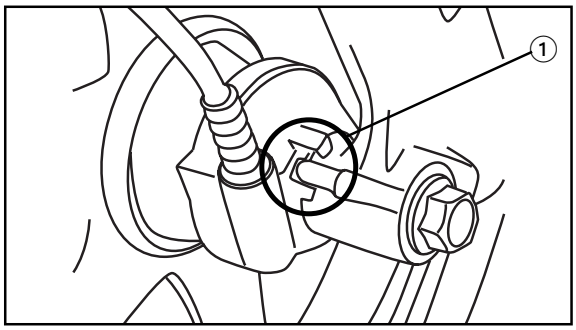

3. Install:
   - front wheel

NOTE:

Make sure the slot in the speed sensor unit fits over the stopper on the outer tube (1).

4. Tighten:
   - wheel axle — **47.5 Nm (4.75 m • kg)**
   - brake caliper bolts — **23 Nm (2.3 m • kg)**

WARNING

Make sure the brake hose is routed properly.

CAUTION:

Before tightening the wheel axle nut, push down hard on the handlebar several times and check if the front fork rebounds smoothly.

Downloaded from www.Manualslib.com manuals search engine

EAS00576

FRONT BRAKE

① Retaining bolt
② Air bleed screw
③ Caliper assembly
④ Pad spring
⑤ Pad set
⑥ Retaining pin
⑦ Brake pad cover
⑧ Brake disc
⑨ Master cylinder cap
⑩ Diaphragm
⑪ Brake hose
⑫ Brake pump assy
⑬ Front brake lever
⑭ Copper washers
⑮ Union bolt
⑯ Brake light switch cable

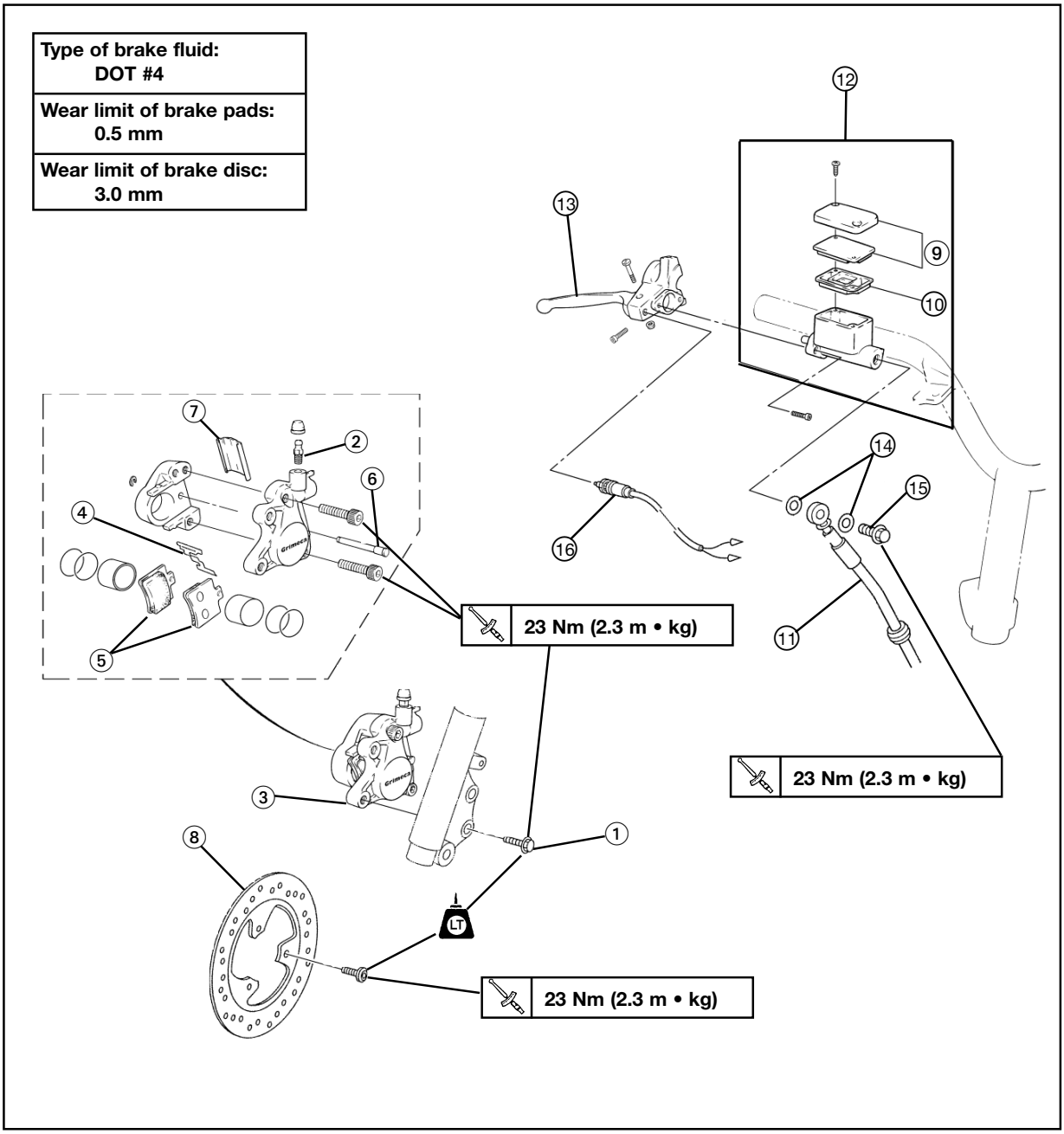

Downloaded from www.Manualslib.com manuals search engine

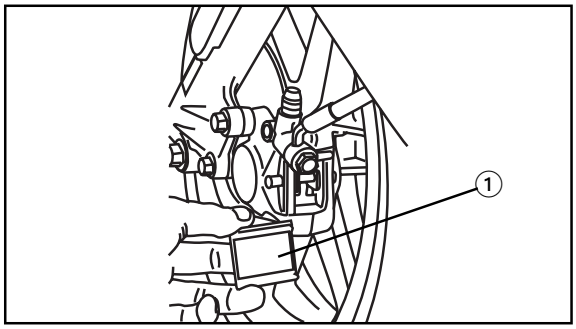

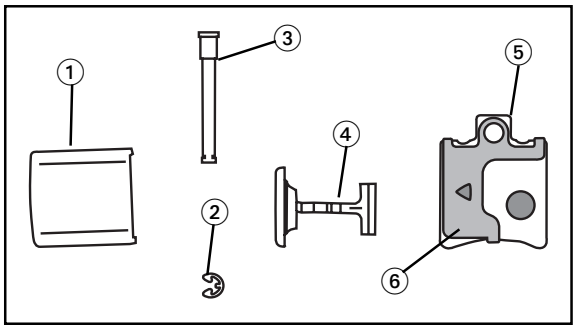

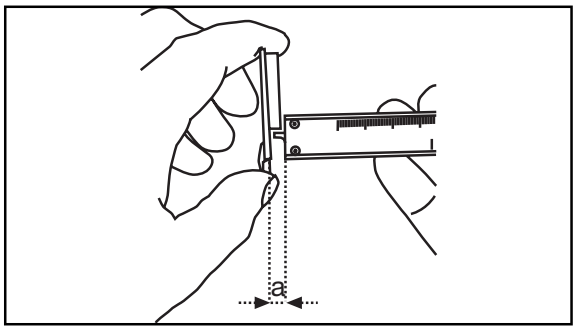

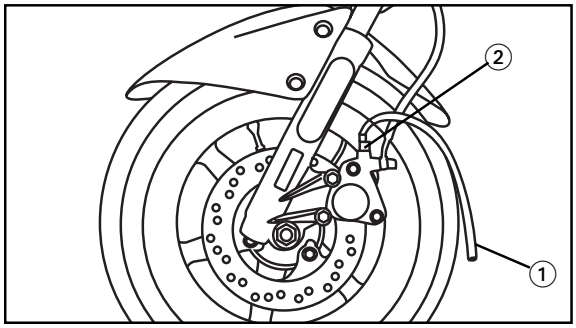

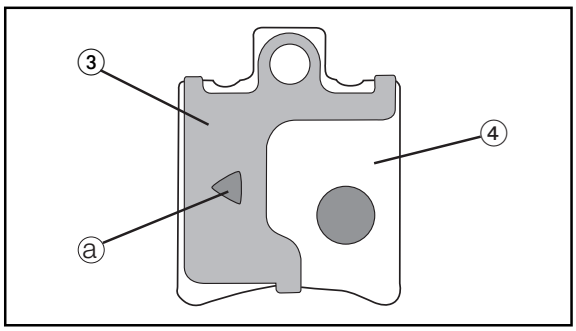

EAS00583

REPLACING THE FRONT BRAKE PADS

NOTE:

When replacing the brake pads, it is not necessary to disconnect the brake hose or disassemble the brake caliper.

1. Remove:
   - brake pad cover ①
   - brake pad clip ②
   - brake pad pin ③
   - brake pad spring ④
2. Remove:
   - brake pads ⑤
     (along with the brake pad shims ⑥)
3. Measure:
   - brake pad wear limit ⓐ
     Out of specification → Replace the brake pads as a set.

Brake pad wear limit
0.5 mm

4. Install:
   - brake pad shims
     (onto the brake pads)
   - brake pads
   - brake pad spring

NOTE:

Always install new brake pads, brake pad shims, and a brake pad spring as a set.

▼▼▼▼▼▼▼▼▼▼▼▼▼▼▼▼▼▼▼▼▼▼▼▼▼▼▼▼▼▼▼▼▼▼

a. Connect a clear plastic hose ① tightly to the bleed screw ②. Put the other end of the hose into an open container.
b. Loosen the bleed screw and push the brake caliper pistons into the brake caliper with your finger.
c. Tighten the bleed screw.

Bleed screw
6 Nm (0.6 m• kg)

d. Install a new brake pad shim ③ onto each new brake pad ④.

Downloaded from www.Manualslib.com manuals search engine

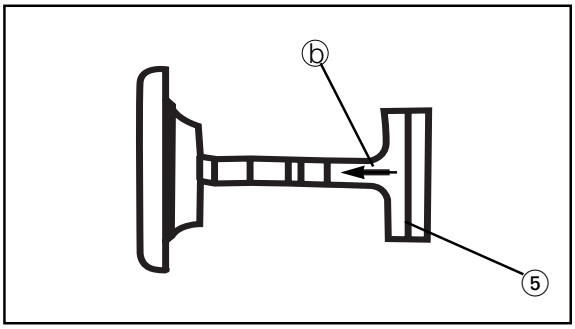

NOTE:

The triangle mark ⓐ on the brake pad shim must point in the direction of disc rotation.

e. Install new brake pads and a new brake pad spring ⑤.

NOTE:

The arrow mark ⓑ of the brake pad spring must point in the direction of disc rotation.

▲▲▲▲▲▲▲▲▲▲▲▲▲▲▲▲▲▲▲▲▲▲▲▲▲▲▲▲▲▲▲▲▲▲

5. Install:
   - brake pad pins
   - brake pad clips
   - brake pad cover
6. Check:
   - brake fluid level
     Below the minimum level mark → Add the recommended brake fluid to the proper level.
     Refer to “CHECKING THE BRAKE FLUID LEVEL” in chapter 3.
7. Check:
   - brake lever operation
     Soft or spongy feeling → Bleed the brake system.
     Refer to “BLEEDING THE HYDRAULIC BRAKE SYSTEM” in chapter 3.

Downloaded from www.Manualslib.com manuals search engine

REMOVING THE BRAKE HOSE

NOTE:

Before replacing the brake hose, drain the brake fluid from the entire brake system.

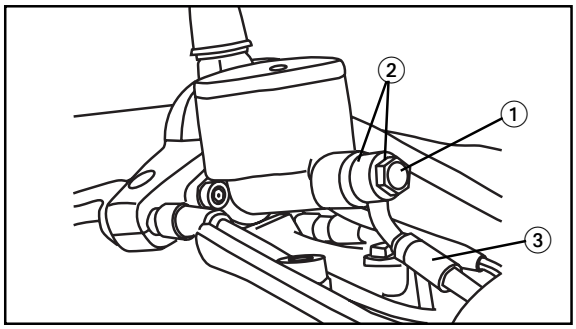

1. Remove:
   - union bolt ①
   - copper washers ②
   - brake hose ③

NOTE:

To collect any remaining brake fluid, place a container under the end of the brake hose.

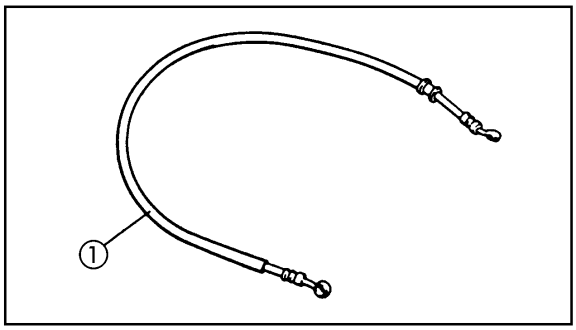

CHECKING THE BRAKE HOSE

1. Check:
   - brake hoses ①
     cracks/damage/wear → Replace.

Downloaded from www.Manualslib.com manuals search engine

EAS00596

INSTALLING THE BRAKE HOSE

WARNING

- **Never use solvents on internal brake components.**

Recommended brake fluid
DOT #4

1. Install:
   - copper washers **New**
   - brake hose
   - union bolt

23 Nm (2.3 m • kg)

WARNING

Proper brake hose routing is essential to insure safe scooter operation. Refer to "CABLE ROUTING".

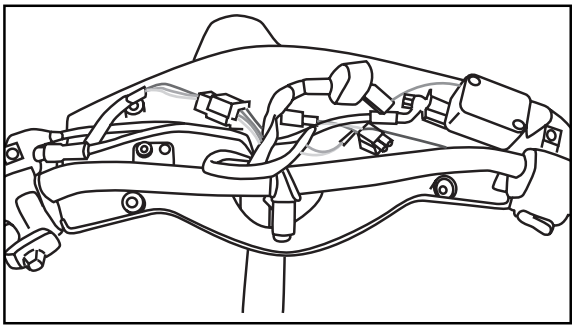

NOTE:

- While holding the brake hose, tighten the union bolt.
- Turn the handlebar to the left and right to make sure the brake hose does not touch other parts (e.g., wire harness, cables, leads). Correct if necessary.

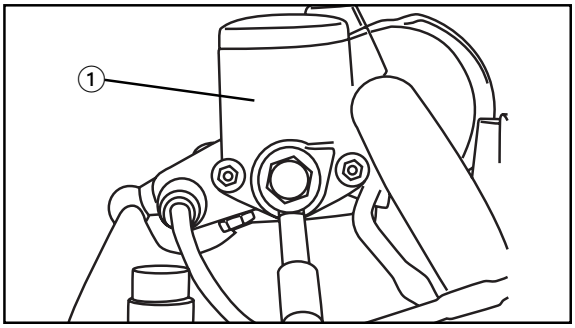

2. Fill:
   - brake master cylinder reservoir ①
     (with the specified amount of the recommended brake fluid)

Recommended brake fluid
DOT #4

Downloaded from www.Manualslib.com manuals search engine

WARNING

- **Use only the designated brake fluid. Other brake fluids may cause the rubber seals to deteriorate, causing leakage and poor brake performance.**
- **Refill with the same type of brake fluid that is already in the system. Mixing brake fluids may result in a harmful chemical reaction, leading to poor brake performance.**
- **When refilling, be careful that water does not enter the brake master cylinder reservoir. Water will significantly lower the boiling point of the brake fluid and could cause vapor lock.**

CAUTION:

Brake fluid may damage painted surfaces and plastic parts. Therefore, always clean up any spilt brake fluid immediately.

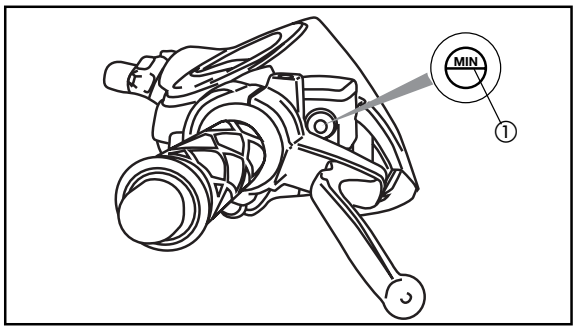

4. Bleed:
   - brake system
     Refer to “BLEEDING THE HYDRAULIC BRAKE SYSTEM” in chapter 3.
5. Check:
   - brake fluid level
     Below the minimum level mark ① → Add the recommended brake fluid to the proper level.
     Refer to “CHECKING THE BRAKE FLUID LEVEL” in chapter 3.
6. Check:
   - brake lever operation
     Soft or spongy feeling → Bleed the brake system.
     Refer to “BLEEDING THE HYDRAULIC BRAKE SYSTEM” in chapter 3.

Downloaded from www.Manualslib.com manuals search engine

EAS00560

REAR WHEEL

① Nut
② Washer
③ Rear rim
④ Valve
⑤ Return springs
⑥ Brake shoes
⑦ Brake camshaft
⑧ Wear indicator
⑨ Bolt
⑩ Brake camshaft lever
⑪ Axle
⑫ O-ring
⑬ Nut

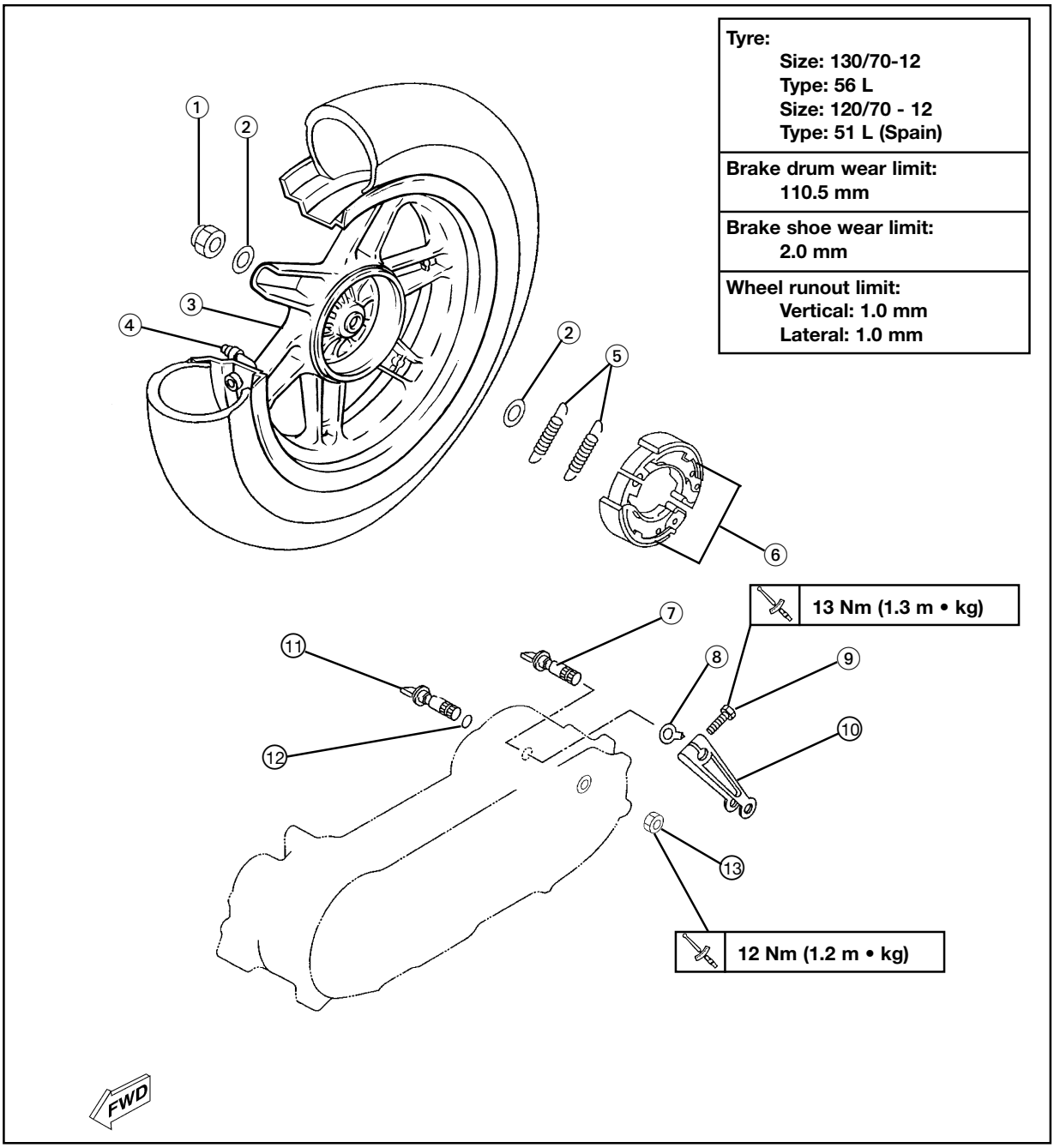

Downloaded from www.Manualslib.com manuals search engine

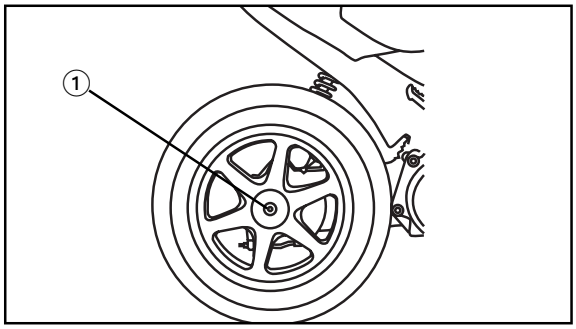

EAS00564
REMOVING THE REAR WHEEL

1. Remove:
   - exhaust pipe assembly
2. Loosen:
   - rear axle nut (1)

NOTE:

When the axle nut is loosened, apply rear brake.

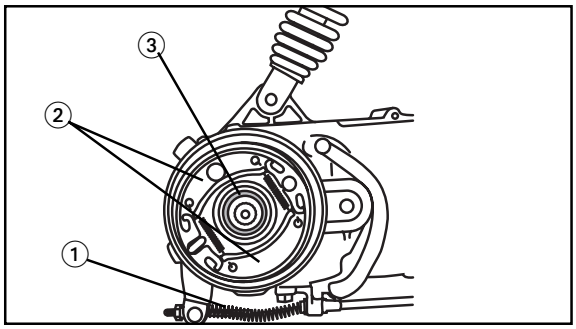

3. Remove:
   - rear wheel
4. Remove:
   - rear brake cable (1)
   - brake shoes (2)
   - plain washer (3)

EAS00565
CHECKING THE REAR WHEEL

1. Inspect:
   - wheel
     See "CHECKING THE FRONT WHEEL" section
2. Measure:
   - wheel runout
     See "CHECKING THE FRONT WHEEL" section

Rim runout limits
Vertical: 1.0 mm
Lateral: 1.0 mm

3. Check:
   - wheel bearings
     See "CHECKING THE FRONT WHEEL" section

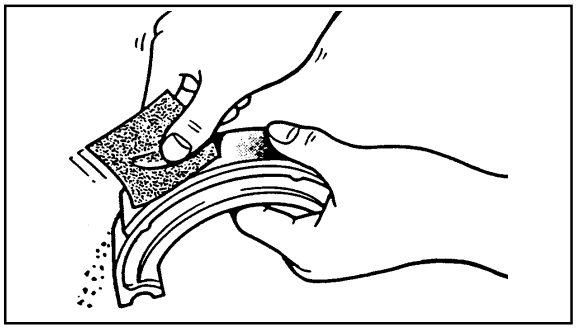

4. Inspect:
   - brake shoes Crystallisation → Polish with sand paper.

NOTE:

After using sand paper, clean the polished particles with a cloth.

Downloaded from www.Manualslib.com manuals search engine

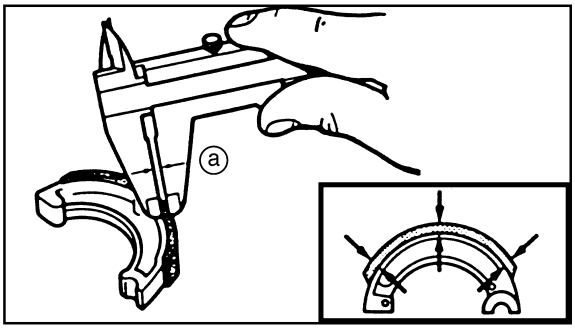

5. Measure:
   - Thickness of brake shoes ⓐ
     Outside specified value → Change

Brake shoes thickness
4.0 mm
<Limit>: 2.0 mm

6. Inspect:
   - Drum brake inner surface
     Oil/Scratches → Replace

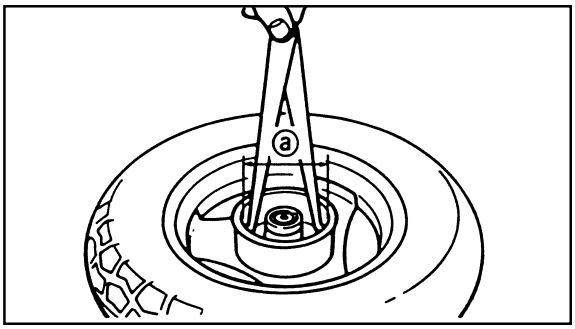

7. Measure
   - Drum brake inner diameter ⓐ :
     Out of specification → Replace

Wear limit of brake drum
110.5 mm

EAS00570

ASSEMBLING THE BRAKE SHOES

When the brake shoe carrier plate is assembled, reverse the removal procedure.
Bear in mind the following points.

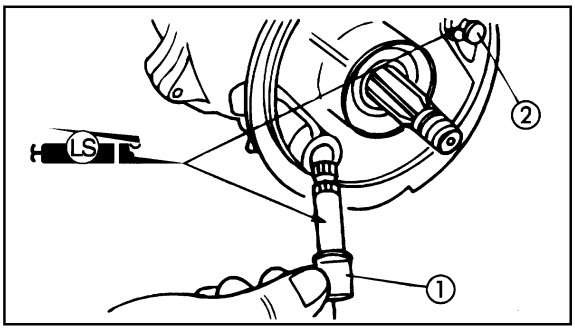

1. Install:
   - brake cam ①

NOTE:

Apply Grease with a lithium soap base on the brake cam ① and pin ②.

CAUTION:

After installing the brake cam, remove excess grease.

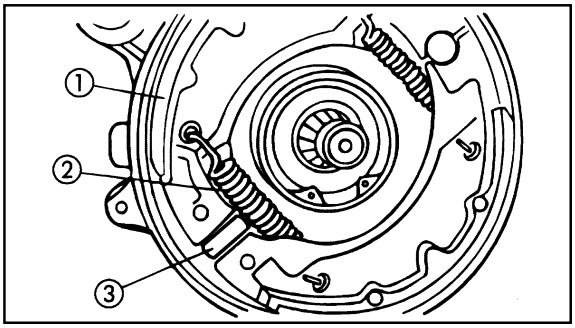

2. Install:
   - brake shoes ①
   - return spring ②

NOTE:

Install with the mark ③ outwards.

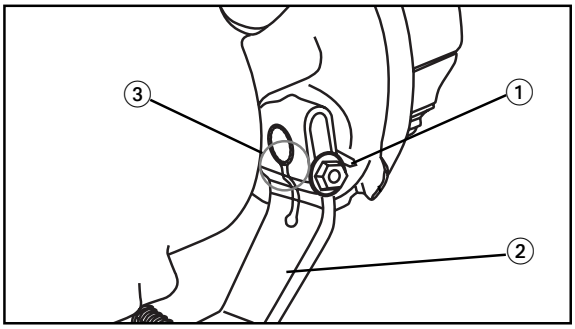

3. Install:
   - wear indicator ①
   - cam lever ②

NOTE:

- Align the projection of the wear indicator ① with the line as shown.
- Align the punch marks ③.

Downloaded from www.Manualslib.com manuals search engine

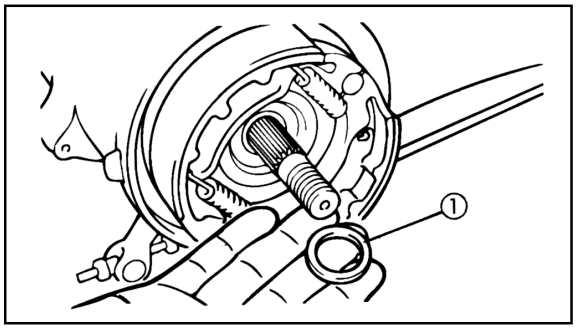

	Bolt (cam lever) **10 Nm (1.0 m • kg)**

4. Install:
   - plain washer ①
   - brake cable

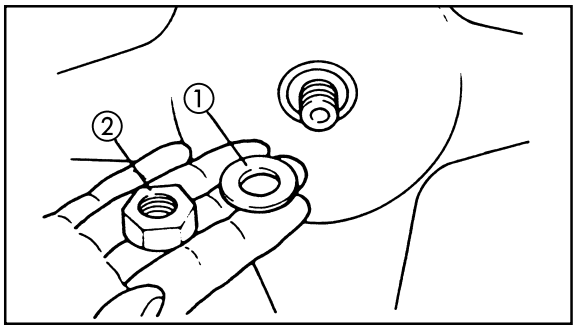

EAS00574

INSTALLING THE REAR WHEEL

When installing the rear wheel, reverse the removal procedure.
The following points should be remembered.

1. Install:
   - rear wheel
   - plain washer ①
   - nut ②

	Nut (Rear wheel axle) **125Nm (12.5 m • kg)**

2. Install:
   - muffler

	Bolt (exhaust pipe side) **9 Nm (0.9 m • kg)** **Bolt (muffler side)** **26 Nm (2.6 m • kg)**

3. Adjust:
   - free play of rear brake lever
     Refer to “CHECKING FREE PLAY OF REAR BRAKE LEVER”, in chapter 3.

Downloaded from www.Manualslib.com manuals search engine

EAS00646

FRONT FORK

1. Steering bracket
2. Bolt
3. Rubber cap
4. Circlip
5. Spring stopper
6. O-ring
7. Collar
8. Dust seal
9. Oil seal circlip
10. Oil seal
11. Spring
12. Piston
13. Rebound spring
14. Circlip
15. Inner tube
16. Oil lock piece
17. Outer tube
18. Washer
19. Bolt

Fork spring free lenght: **224 mm**
Fork oil capacity: **45 cc ± 1 cc**
Oil grade: **SAE 10 W oil fork or equivalent**

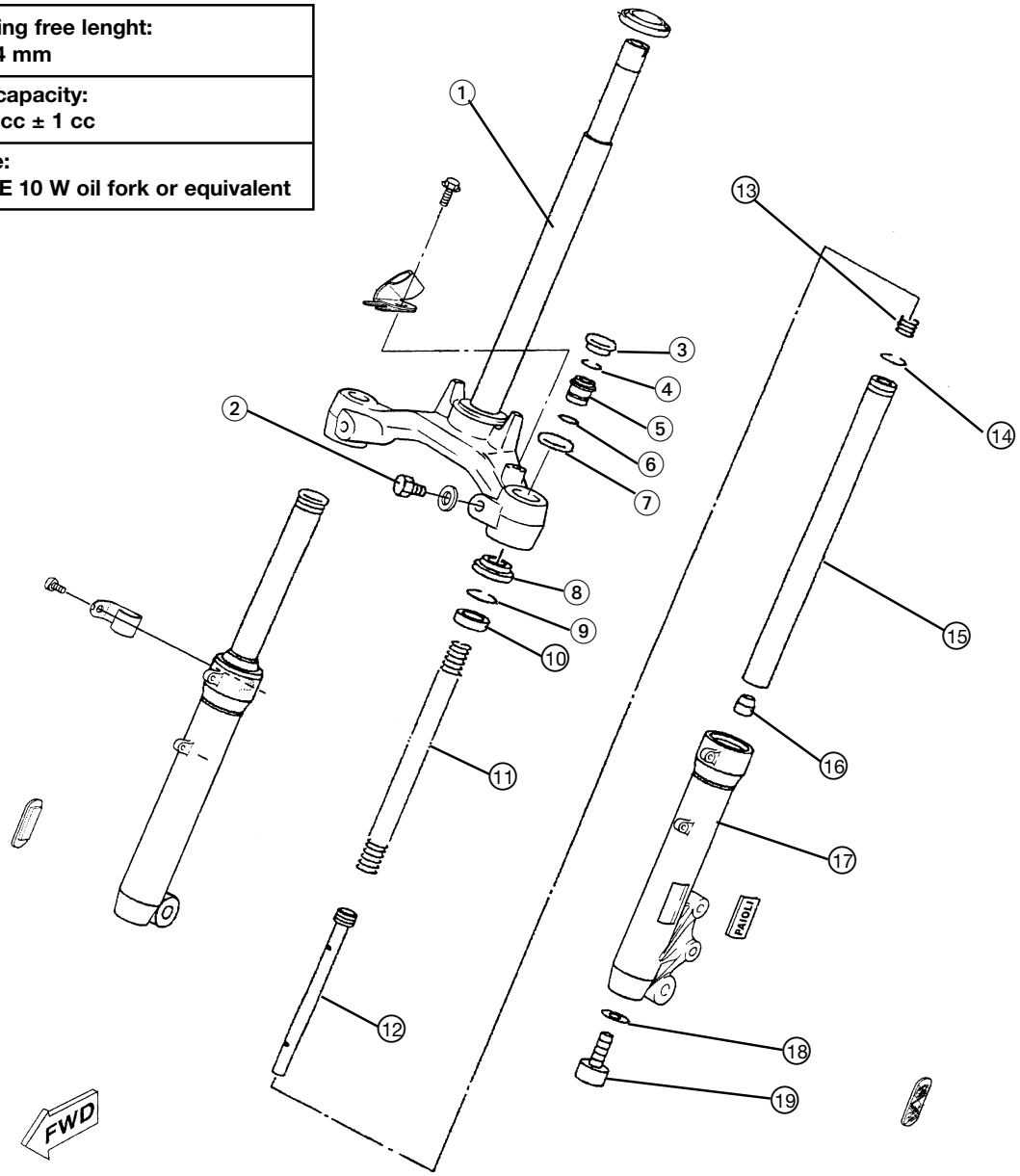

Downloaded from www.Manualslib.com manuals search engine

EAS00651

REMOVING THE FRONT FORK LEGS

1. Place the scooter on its central stand and place an adequate support under the engine
2. Remove:
   - brake calipers
     Refer to “FRONT BRAKE REMOVAL” section.
3. Remove:
   - front fender
   - front wheel
     See “FRONT WHEEL REMOVAL” section.
4. Remove:
   - front upper cowling
     Refer to “FRONT BODYWORK, MUDGUARD” in chapter 3.

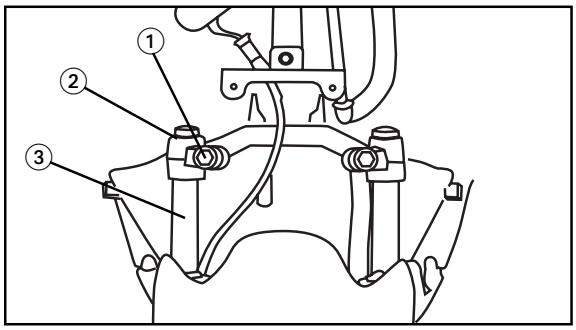

5. Loosen:
   - pinch bolt ① (fork)
6. Remove:
   - circlip ②
   - front fork ③

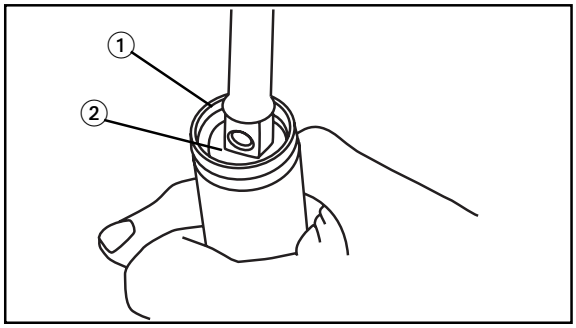

EAS00652

DISASSEMBLING THE FRONT FORK LEGS

1. Remove:
   - rubber cap
   - circlip ①
   - spring stopper ②
   - collar
   - fork spring
2. Drain:
   - fork oil

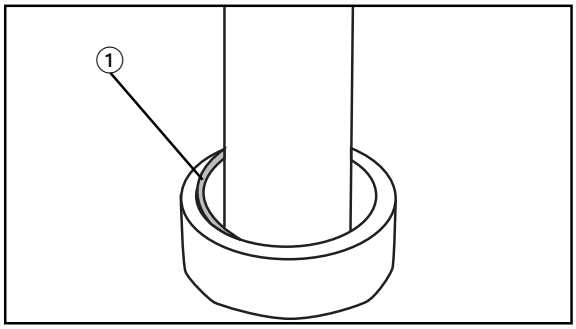

3. Remove:
   - dust seal
   - circlip ①

Downloaded from www.Manualslib.com manuals search engine

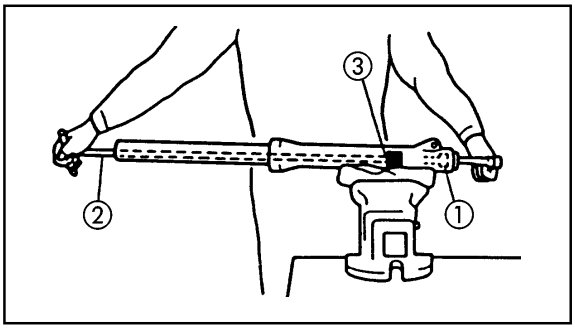

4. Remove:
   - bolt (hydraulic rod) ①
   - copper washer

NOTE:

Remove the bolt (hydraulic rod) while the hydraulic rod is held with the T-handle ② and a support ③

T-handle:
90890-01326
Support:
90890-01294

5. Remove:
   - inner tube
   - piston (hydraulic rod)
   - rebound spring
   - oil lock piece
   - oil seal (outer tube)

EAS00657

CHECKING THE FRONT FORK LEGS

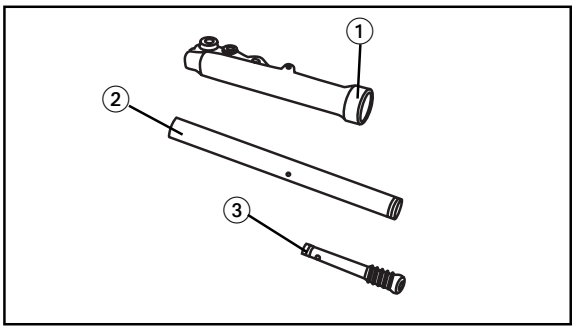

1. Check:
   - outer tube ①
   - inner tube ②
   - piston (hydraulic rod) ③
     Striping/Warping/Wear/Damage → Replace

WARNING

Do not try to straighten an outer tube or an inner tube as this may dangerously weaken the tube.

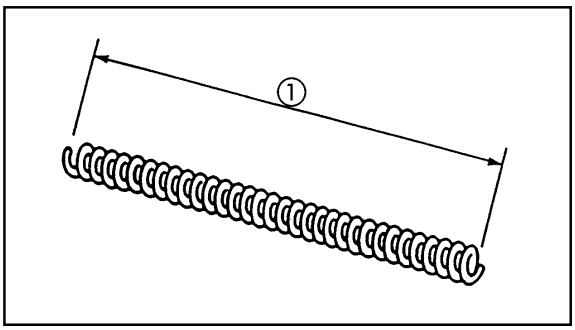

2. Measure:
   - fork spring
     Above specified limit → Replace

Fork spring free lenght ①
224 mm

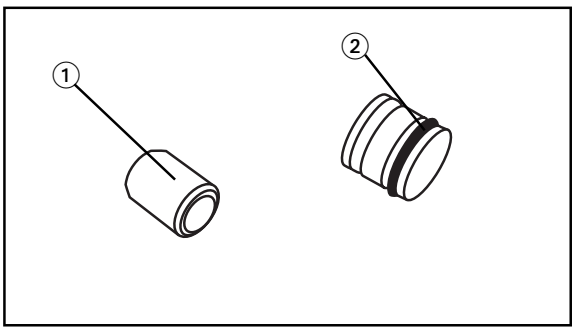

3. Inspect:
   - oil lock piece ①
   - o-ring (spring stopper) ②
     Wear/Damage → Replace

Downloaded from www.Manualslib.com manuals search engine

EAS00658

ASSEMBLING THE FRONT FORK LEGS

Reverse the disassembly procedure. Bear in mind the following points.

NOTE:

- When assembling the fork, ensure that the following new parts are used.
- Oil seal
- Circlips
- Ensure that all components are clean before assembly.

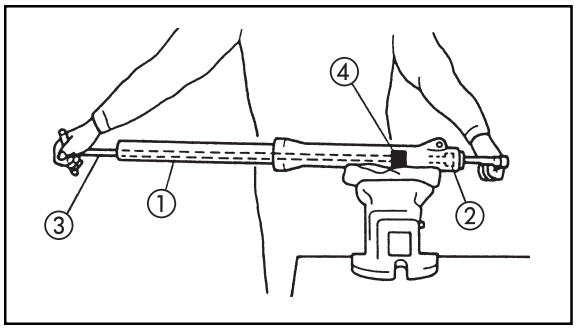

1. Install:
   - oil lock piece
   - piston (hydraulic rod)
   - inner tube ①
   - copper washer (new)
   - bolt (hydraulic rod) ②

Bolt (hydraulic rod)
23 Nm (2.3 m • kg)
LOCTITE®

NOTE:

Tighten the bolt (hydraulic rod) while supporting the outer tube with the T-handle ③ and the support ④.

T-handle
90890-01326
Support:
90890-01294

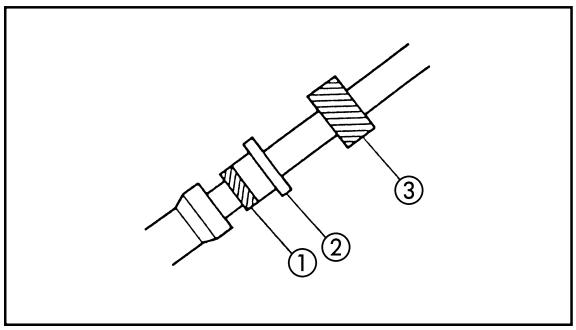

2. Install:
   - oil seal ①
     Use a counterbalance for installing fork seals ③ and an adaptor ②.

Counterbalance for installing oil seals
90890-01184
Adaptor:
90890-01186

NOTE:

Before installing the oil seal, apply grease with a lithium soap base on the edges of same.

CAUTION:

Ensure that the numbered side of the seal is facing upwards.

Downloaded from www.Manualslib.com manuals search engine

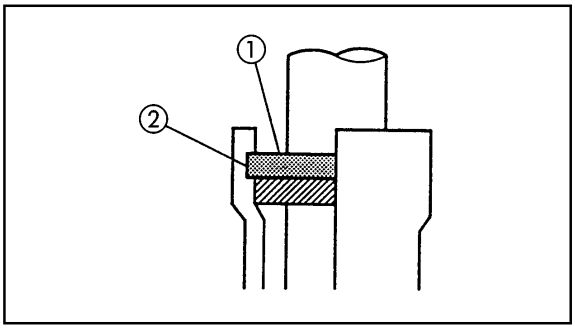

3. Install:
   - circlip ①
   - dust seal

NOTE:

Couple the circlip correctly on the groove of the outer tube ②.

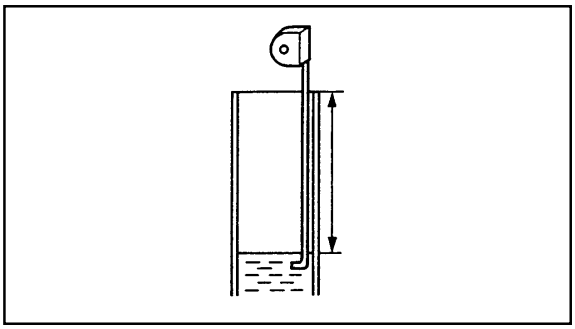

4. Fill:
   - fork oil

Quantity (each front fork leg)
45 cc
Recommended oil
SAE 10W or equivalent

From fork leg oil level (from the top of the inner tube, with the inner tube fully compressed and without the fork spring)
105 mm

NOTE:

Place the fork in a vertical position.

5. Install:
   - fork spring
   - collar
   - spring stopper
   - circlip
   - rubber cap

NOTE:

- Before installing the spring stopper, apply grease to the o-ring.
- Couple the circlip correctly on the inner tube groove.

Downloaded from www.Manualslib.com manuals search engine

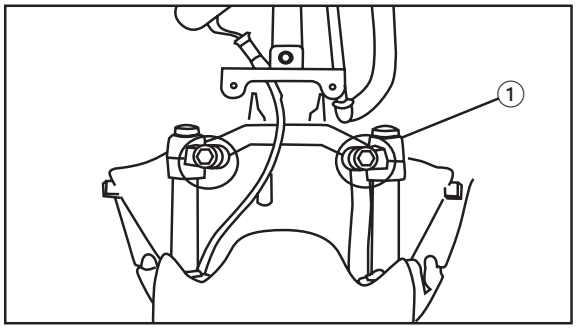

EAS00663

INSTALLING THE FRONT FORK LEGS

Reverse the removal procedure.
The following points should be remembered

1. Install:
   - front fork
   - circlip ①

NOTE:

Attach the circlip correctly on the inner tube groove.

2. Tighten:
   - pinch bolt (steering bracket):

	Pinch bolt (steering bracket) **30 Nm (3.0 m • kg)**

3. Install:
   - front wheel
   - brake calliper
   - brake hose holder
   - speed sensor coupler
     See “FRONT WHEEL” section
   - front mudguard
     Refer to “FRONT BODYWORK MUDGUARD” in chapter 3.

	Wheel axle **47.5 Nm (4.75 m • kg)**

Downloaded from www.Manualslib.com manuals search engine

EAS00664

HANDLEBAR AND STEERING

① Handlebar
② Grip cap
③ Throttle grip
④ Throttle grip guide
⑤ Grip
⑥ Nut
⑦ Bolt
⑧ Throttle cable
⑨ Brake cable
⑩ Upper ring nut
⑪ Lock washer
⑫ Center ring nut
⑬ Rubber washer
⑭ Lower ring nut
⑮ Bearing cover
⑯ Upper bearing race
⑰ Bearing cage
⑱ Bearing race
⑲ Lower bracket

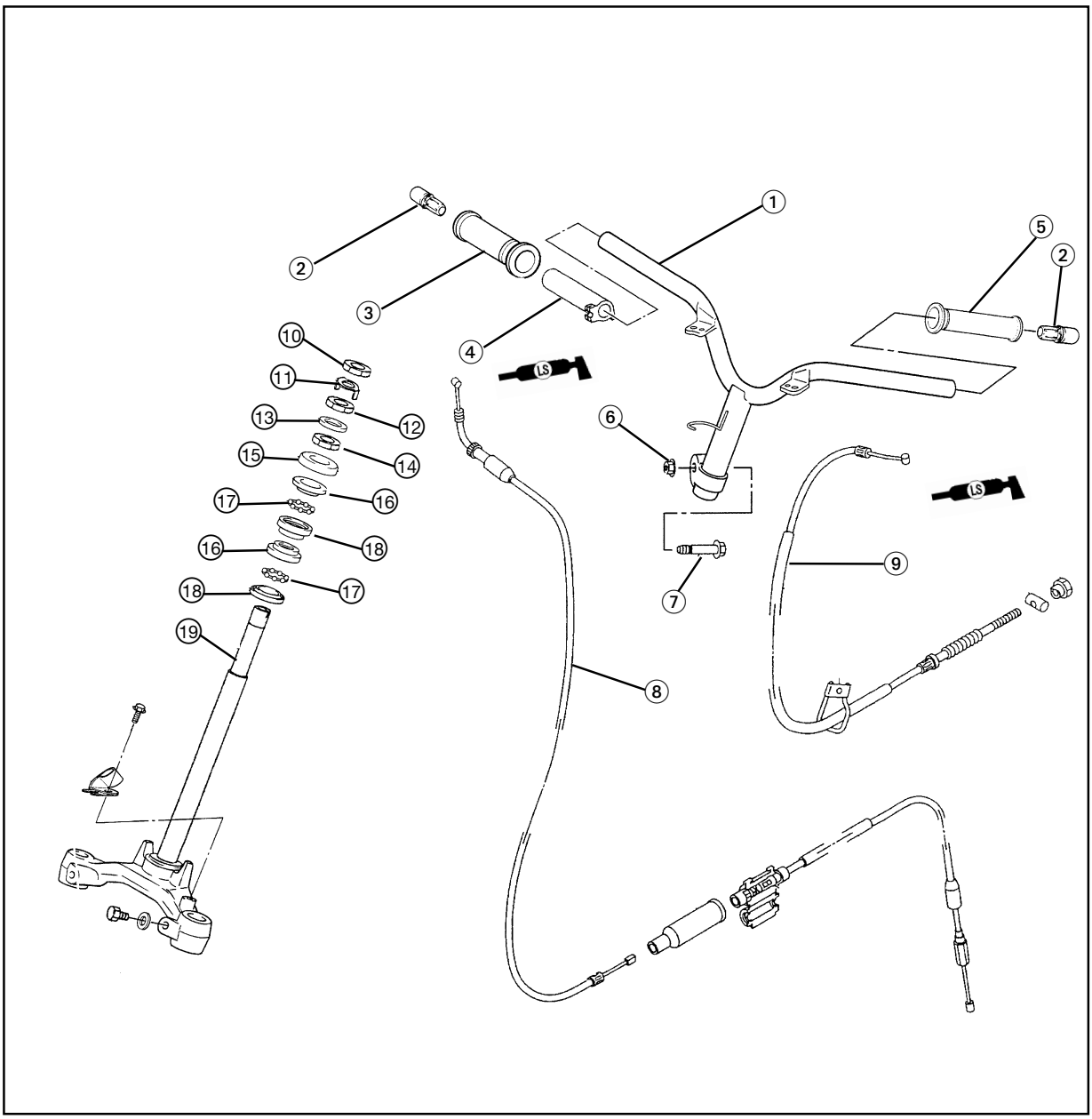

Downloaded from www.Manualslib.com manuals search engine

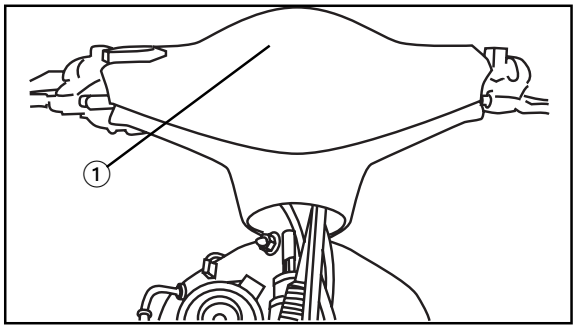

EAS00666

REMOVING THE HANDLEBAR

1. Stand the scooter on a level surface.

WARNING

Securely support the scooter so that there is no danger of it falling over.

2. Remove:
   - front upper cowling
   - front middle cowling
   - legshield
   - handlebar cover (upper) 1

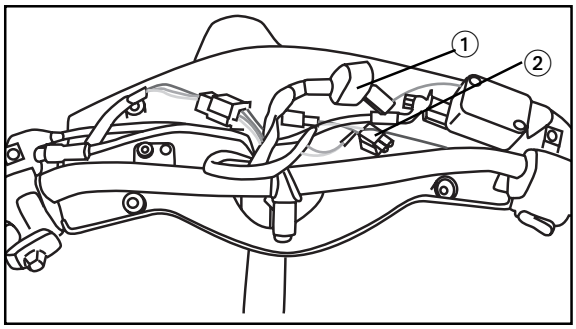

3. Disconnect:
   - meter coupler 1
   - flasher relay 2

4. Disconnect
   - handlebar switch couplers (left and right)
   - brake switch connectors (front and rear)
   - rear brake cable

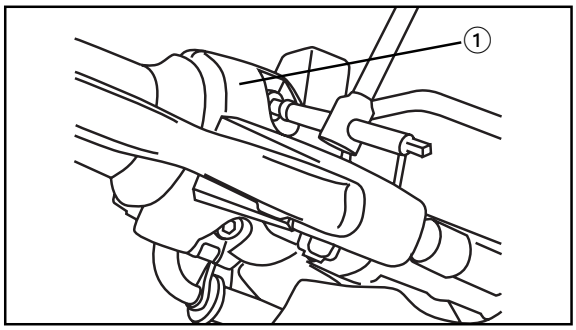

5. Remove:
   - handlebar switch (right) 1

6. Disconnect:
   - throttle cable

7. Remove:
   - throttle grip

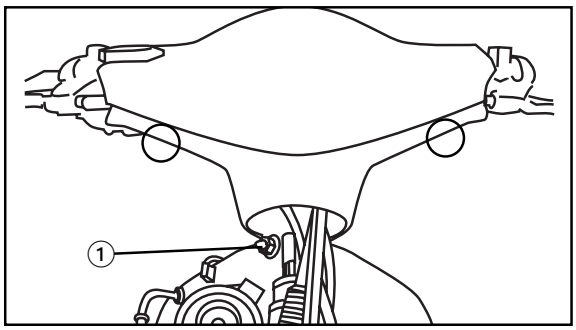

8. Loosen:
   - handlebar securing nut 1
9. Remove:
   - screws (lower handlebar cover)

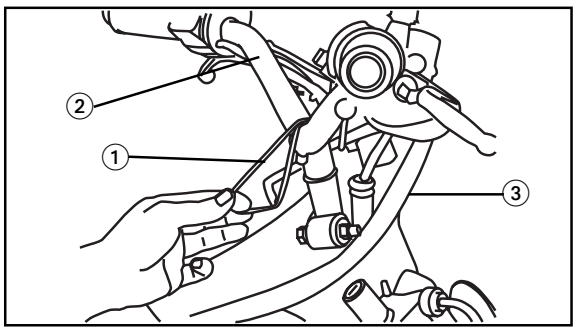

10. Remove:
    - wire harness fixed strap 1
11. Remove:
    - handlebar 2
    - handlebar cover (lower) 3

Downloaded from www.Manualslib.com manuals search engine

EAS00678

REMOVING THE LOWER BRACKET

1. Stand the scooter on a level surface.

WARNING

Securely support the scooter so that there is no danger of it falling over.

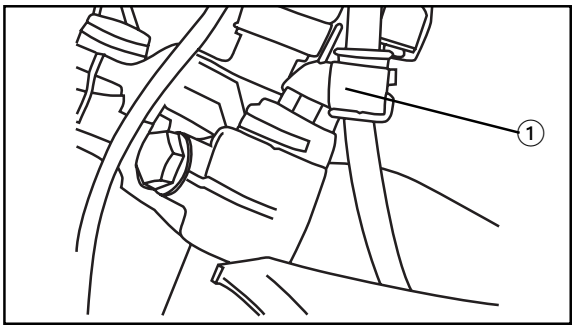

2. Remove:
   - handlebar

3. Remove:
   - brake caliper
   - brake hose holder ①

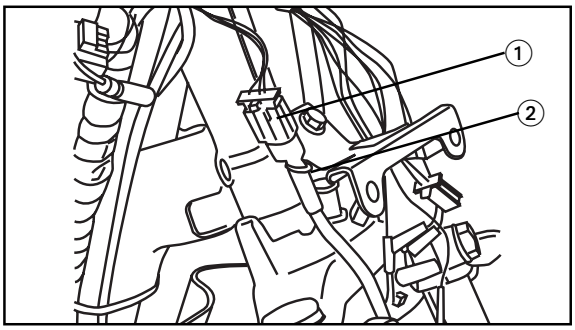

4. Disconnect:
   - speed sensor coupler ①

5. Remove:
   - clamp ②

6. Remove:
   - ring nut (upper)
     (with the ring nut wrench)

	Ring nut wrench **90890-01403**

7. Remove:
   - lock washer
   - ring nut (center)
   - rubber washer
   - ring nut (lower)

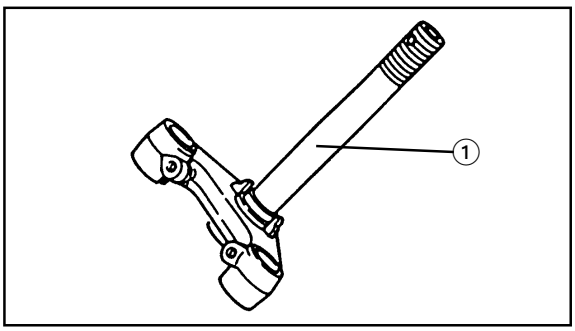

WARNING

Securely support the lower bracket so that there is no danger of it falling.

8. Remove:
   - lower bracket ①
     (with wheel and front forks)

Downloaded from www.Manualslib.com manuals search engine

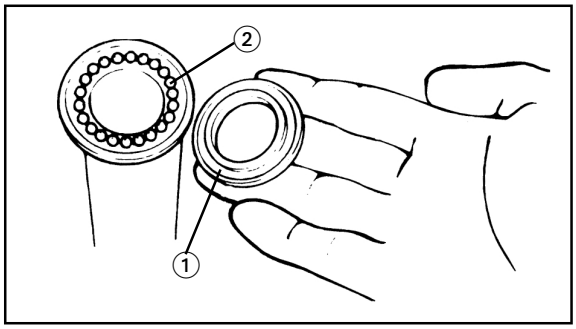

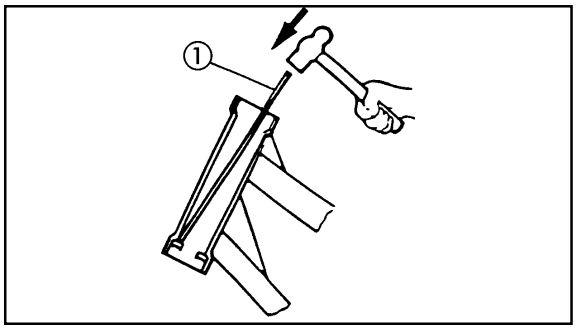

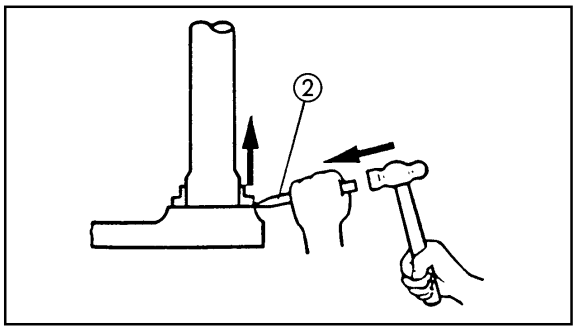

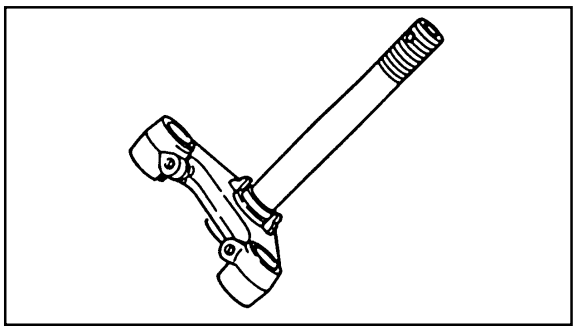

EAS00682

CHECKING THE STEERING HEAD

1. Wash:
   - bearing balls
   - bearing races

	Recommended cleaning solvent **Kerosene**

2. Check:
   - bearing races ①
     Damage/pitting → Replace.
   - bearing balls ②
     Damage/pitting → Replace.
3. Replace:
   - bearing balls
   - bearing races

▼▼▼▼▼▼▼▼▼▼▼▼▼▼▼▼▼▼▼▼▼▼▼▼▼▼▼▼▼▼▼▼▼▼

a. Remove the bearing races from the steering head pipe with a long rod ① and hammer.
b. Remove the bearing race from the lower bracket with a floor chisel ② and hammer.
c. Install a new dust seal and new bearing races.

CAUTION:

If the bearing race is not installed properly, the steering head pipe could be damaged.

NOTE:

- Always replace the bearing balls and bearing races as a set.
- Whenever the steering head is disassembled, replace the dust seal.

▲▲▲▲▲▲▲▲▲▲▲▲▲▲▲▲▲▲▲▲▲▲▲▲▲▲▲▲▲▲▲▲▲▲

4. Check:
   - lower bracket
     (along with the steering stem)
     Bends/cracks/damage → Replace.

Downloaded from www.Manualslib.com manuals search engine

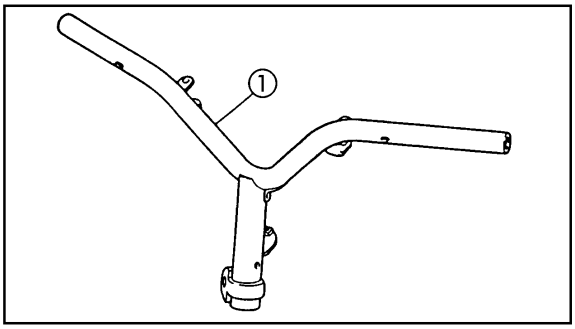

EAS00668
CHECKING THE HANDLEBAR

1. Check:
   - handlebar ①
     Bends/cracks/damage → Replace.

⚠ WARNING

Do not attempt to straighten a bent handlebar as this may dangerously weaken it.

2. Install:
   - handlebar grip

▼▼▼▼▼▼▼▼▼▼▼▼▼▼▼▼▼▼▼▼▼▼▼▼▼▼▼▼▼▼▼▼▼▼

a. Apply a thin coat of rubber adhesive onto the left end of the handlebar.
b. Slide the handlebar grip over the left end of the handlebar.
c. Wipe off any excess rubber adhesive with a clean rag.

⚠ WARNING

Do not touch the handlebar grip until the rubber adhesive has fully dried.

▲▲▲▲▲▲▲▲▲▲▲▲▲▲▲▲▲▲▲▲▲▲▲▲▲▲▲▲▲▲▲▲▲▲

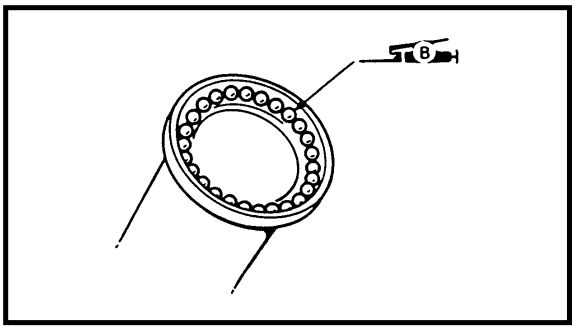

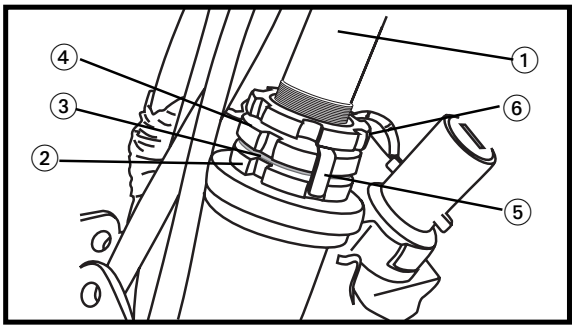

EAS00684
INSTALLING THE STEERING HEAD

1. Lubricate:
   - upper bearing
   - lower bearing
   - bearing races

	Recommended lubricant **Lithium-soap-based grease**

2. Install:
   - lower bracket ①
   - lower ring nut ②
   - rubber washer ③
   - center ring nut ④
   - lock washer ⑤
   - upper ring nut ⑥
     Refer to “CHECKING THE STEERING HEAD” in chapter 3.

NOTE:

Tighten the ring nuts to specification torque and according to process.

Downloaded from www.Manualslib.com manuals search engine

EAS00673

INSTALLING THE HANDLEBAR

1. Stand the scooter on a level surface.

WARNING

Securely support the scooter so that there is no danger of it falling over.

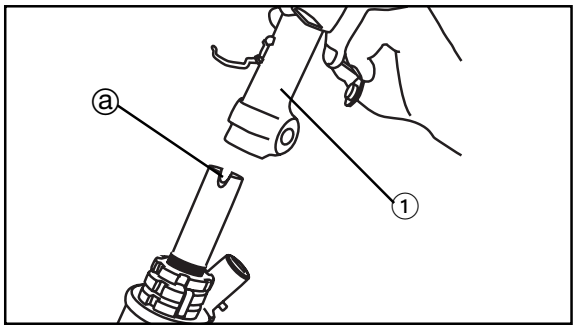

2. Install:
   - handlebar ①

NOTE:

Align the slot ⓐon the steering with the pin on the handlebar.

3. Tighten:
   - handlebar securing nut

	42.5 Nm (4.25 m • kg)

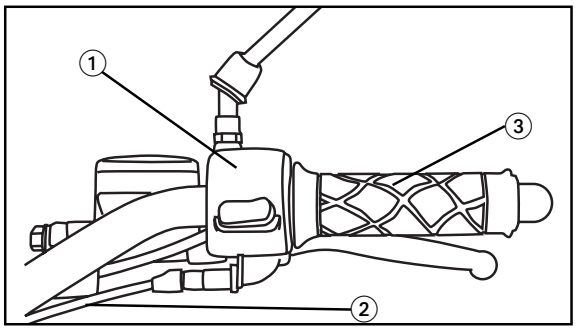

4. Install:
   - right handlebar switch ①
   - throttle cable ②
   - throttle grip ③

NOTE:

Lubricate the inside of the throttle grip with a thin coat of lithium-soap-based grease and install it onto the handlebar.

NOTE:

- Align the projection on the right handlebar switch with the hole on the handlebar.

WARNING

Make sure the throttle grip operates smoothly.

5. Fasten:
   - wire harness
     (fixed to steering head with a strap ①)

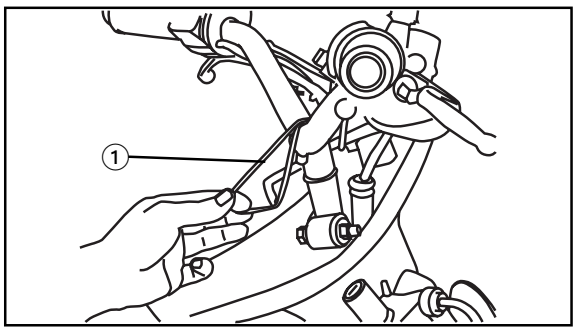

6. Adjust:
   - throttle cable free play
     Refer to “ADJUSTING THE THROTTLE CABLE FREE PLAY” in chapter 3.

	Throttle cable free play (at the flange of the throttle grip) **2 ~ 5 mm**

Downloaded from www.Manualslib.com manuals search engine

Downloaded from www.Manualslib.com manuals search engine

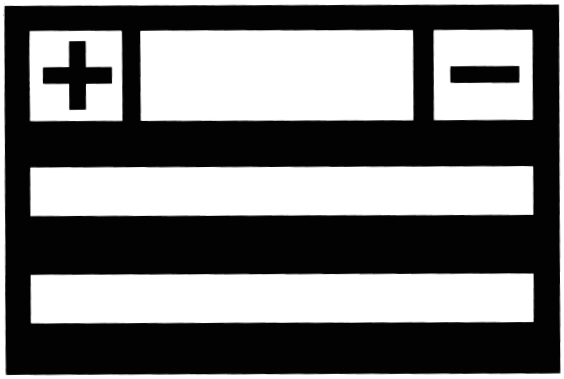

ELEC 8

Downloaded from www.Manualslib.com manuals search engine

CHAPTER 8
ELECTRICAL SYSTEM

ELECTRICAL COMPONENTS 8-1

CHECKING SWITCH CONTINUITY.....8-3

CHECKING THE SWITCHES.....8-4

CHECKING THE BULBS AND BULB SOCKETS 8-5
TYPS OF BULBS 8-5
CHECKING THE CONDITION OF THE BULBS 8-5
CHECKING THE CONDITION OF THE BULB SOCKETS.....8-6

IGNITION SYSTEM 8-8
CIRCUIT DIAGRAM 8-8
TROUBLESHOOTING 8-9

ELECTRIC STARTING SYSTEM.....8-12
CIRCUIT DIAGRAM 8-12
STARTING CIRCUIT CUT-OFF SYSTEM OPERATION 8-13
TROUBLESHOOTING 8-14
STARTER MOTOR 8-16
REMOVING THE STARTER MOTOR 8-17
CHECKING THE STARTER MOTOR 8-17
ASSEMBLING THE STARTER MOTOR 8-18

CHARGING SYSTEM 8-19
CIRCUIT DIAGRAM 8-19
TROUBLESHOOTING 8-20

LIGHTING SYSTEM 8-22
CIRCUIT DIAGRAM 8-22
TROUBLESHOOTING 8-23
CHECKING THE LIGHTING SYSTEM 8-24

SIGNALING SYSTEM 8-27
CIRCUIT DIAGRAM 8-27
TROUBLESHOOTING 8-28
CHECKING THE SIGNALING SYSTEM.....8-29

Downloaded from www.Manualslib.com manuals search engine

EAS00729

ELECTRICAL SYSTEM

ELECTRICAL COMPONENTS

① Wire harness
② Starter motor
③ DC-CDI Unit
④ Engine oil level gauge
⑤ Starter relay
⑥ Fuel sender gauge
⑦ Battery
⑧ Ignition coil
⑨ Temperature sender (CS50Z only)

Ignition coil:
Primary coil resistance:
0.56 ~ 0.84 Ω at 20 °C
Secondary coil resistance:
5.68 ~ 8.52 Ω at 20 °C

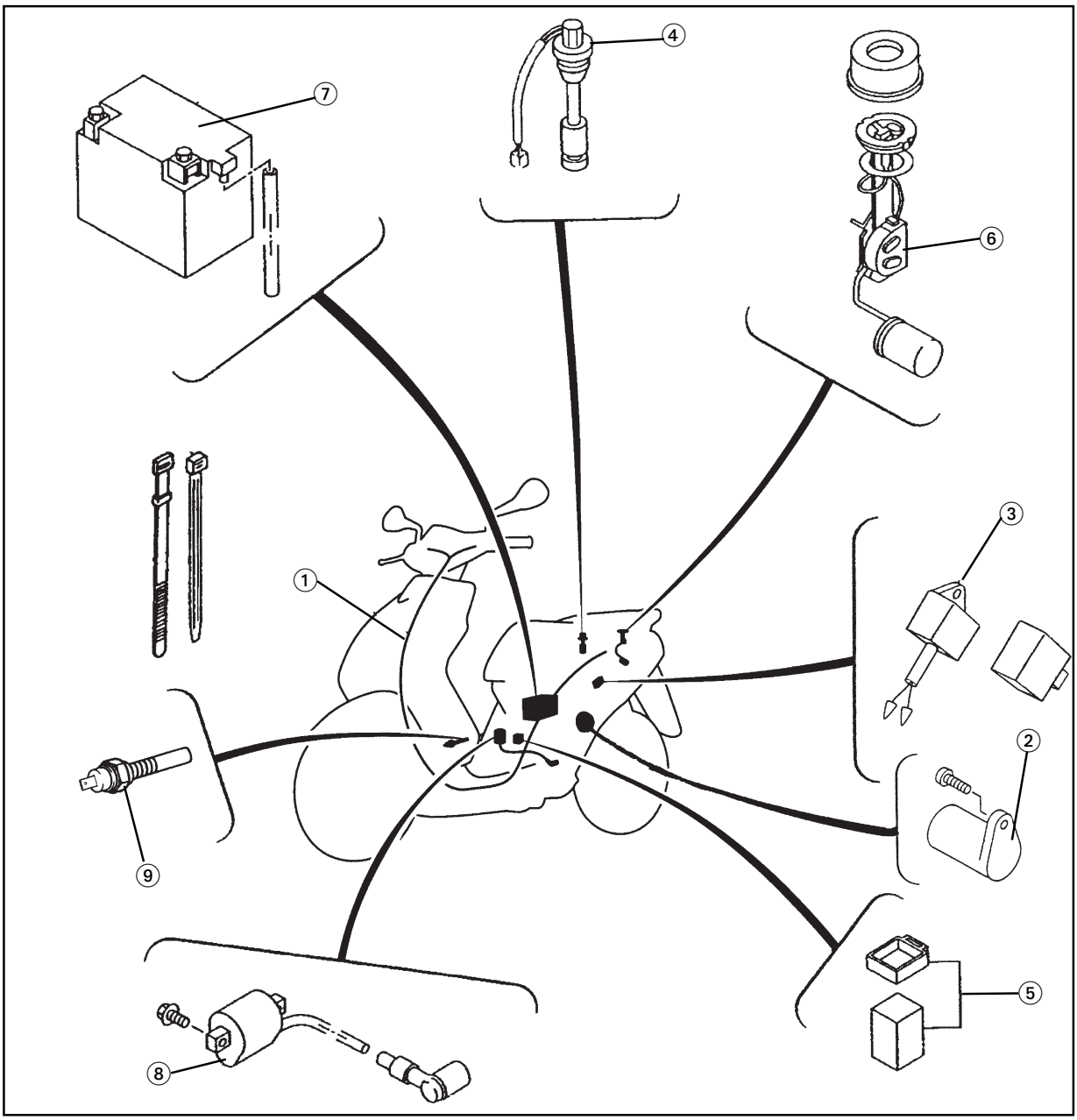

Downloaded from www.Manualslib.com manuals search engine

① Main switch/seat closure
② Indicator relay
③ Rectifier/regulator
④ Horn

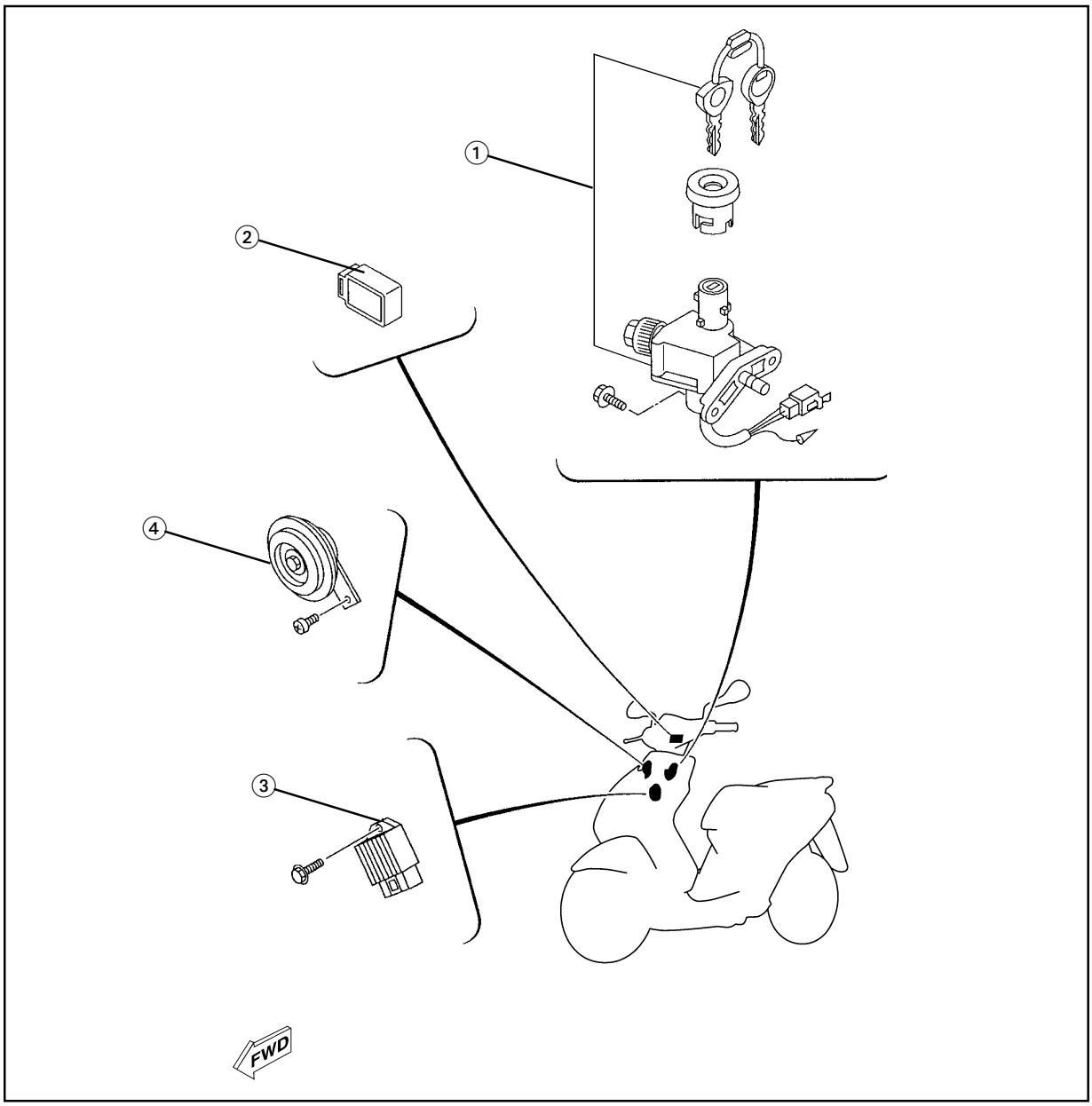

Downloaded from www.Manualslib.com manuals search engine

EAS00730

CHECKING SWITCH CONTINUITY

Check each switch for continuity with the pocket tester. If the continuity reading is incorrect, check the wiring connections and if necessary, replace the switch.

CAUTION:

Never insert the tester probes into the coupler terminal slots. Always insert the probes from the opposite end of the coupler, taking care not to loosen or damage the leads.

Pocket tester
90890-03112

NOTE:

- Before checking for continuity, set the pocket tester to “0” and to the “Ωx1” range.
- When checking for continuity, switch back and forth between the switch positions a few times.

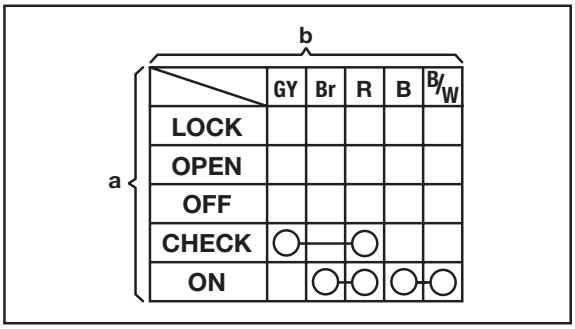

The terminal connections for switches (e.g., main switch, engine stop switch) are shown in an illustration similar to the one on the left.
The switch positions ⓐ are shown in the far left column and the switch lead colors ⓑ are shown in the top row in the switch illustration.

NOTE:

“○—○” indicates a continuity of electricity between switch terminals (i.e., a closed circuit at the respective switch position).

The example illustration on the left shows that:
There is continuity between black and black/white when the switch is set to “ON”.
There is continuity between red and brown when the switch is set to “ON”.

Downloaded from www.Manualslib.com manuals search engine

EAS00731

CHECKING THE SWITCHES

Check each switch for damage or wear, proper connections, and also for continuity between the terminals. Refer to “CHECKING SWITCH CONTINUITY”.

Damage/wear → Repair or replace.
Improperly connected → Properly connect.
Incorrect continuity reading → Replace the switch.

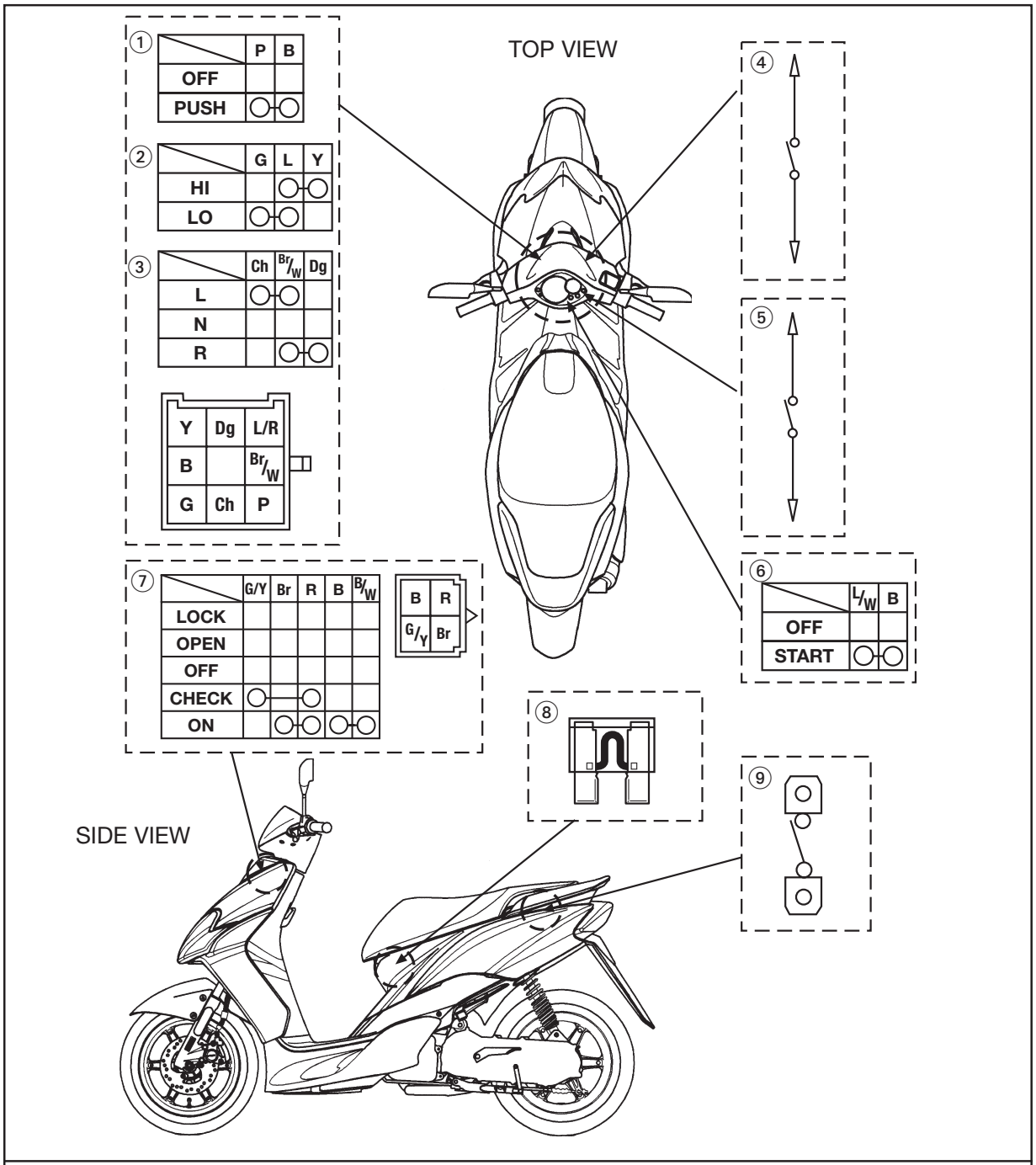

① Horn switch
② Dimmer switch
③ Turn signal switch
④ Front brake switch
⑤ Rear brake switch
⑥ Star switch
⑦ Main switch
⑧ Fuse
⑨ Oil level switch

Downloaded from www.Manualslib.com manuals search engine

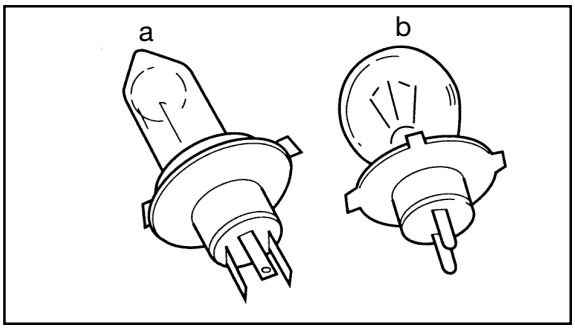

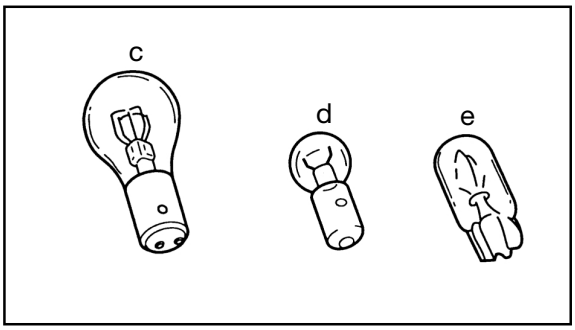

EAS00733

CHECKING THE BULBS AND BULB SOCKETS

Check each bulb and bulb socket for damage or wear, proper connections, and also for continuity between the terminals.
Damage/wear → Repair or replace the bulb, bulb socket or both.
Improperly connected → Properly connect.
No continuity → Repair or replace the bulb, bulb socket or both.

TYPES OF BULBS

The bulbs used on this scooter are shown in the illustration on the left.

- Bulbs ⓐand ⓑ are used for the headlights and usually use a bulb holder that must be detached before removing the bulb. The majority of these types of bulbs can be removed from their respective socket by turning them counterclockwise.
- Bulbs ⓒ is used for turn signal and tail/brake lights and can be removed from the socket by pushing and turning the bulb counterclockwise.
- Bulbs ⓓ and ⓔ are used for meter and indicator lights and can be removed from their respective socket by carefully pulling them out.

CHECKING THE CONDITION OF THE BULBS

The following procedure applies to all of the bulbs.

1. Remove:
   - bulb

WARNING

Since the headlight bulb gets extremely hot, keep flammable products and your hands away from the bulb until it has cooled down.

CAUTION:

- **Be sure to hold the socket firmly when removing the bulb. Never pull the lead, otherwise it may be pulled out of the terminal in the coupler.**

Downloaded from www.Manualslib.com manuals search engine

- **Avoid touching the glass part of the headlight bulb to keep it free from oil, otherwise the transparency of the glass, the life of the bulb, and the luminous flux will be adversely affected. If the headlight bulb gets soiled, thoroughly clean it with a cloth moistened with alcohol or lacquer thinner.**

2. Check:
   - bulb (for continuity)
     (with the pocket tester)
     No continuity → Replace.

Pocket tester
90890-03112

NOTE:

Before checking for continuity, set the pocket tester to "0" and to the "Ω x 1" range.

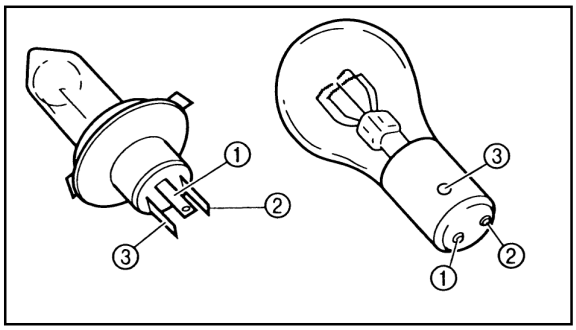

▼▼▼▼▼▼▼▼▼▼▼▼▼▼▼▼▼▼▼▼▼▼▼▼▼▼▼▼▼▼▼▼▼▼

a. Connect the positive tester probe to terminal ① and the negative tester probe to terminal ②, and check the continuity.
b. Connect the positive tester probe to terminal ① and the negative tester probe to terminal ③, and check the continuity.
c. If either of the readings indicate no continuity, replace the bulb.

▲▲▲▲▲▲▲▲▲▲▲▲▲▲▲▲▲▲▲▲▲▲▲▲▲▲▲▲▲▲▲▲▲▲

CHECKING THE CONDITION OF THE BULB SOCKETS

The following procedure applies to all of the bulb sockets.

1. Check:
   - bulb socket (for continuity)
     (with the pocket tester)
     No continuity → Replace.

Pocket tester
90890-03112

NOTE:

Check each bulb socket for continuity in the same manner as described in the bulb section; however, note the following.

▼▼▼▼▼▼▼▼▼▼▼▼▼▼▼▼▼▼▼▼▼▼▼▼▼▼▼▼▼▼▼▼▼▼

a. Install a good bulb into the bulb socket.

Downloaded from www.Manualslib.com manuals search engine

b. Connect the pocket tester probes to the respective leads of the bulb socket.
c. Check the bulb socket for continuity. If any of the readings indicate no continuity, replace the bulb socket.

▲▲▲

EAS00734

IGNITION SYSTEM

CIRCUIT DIAGRAM

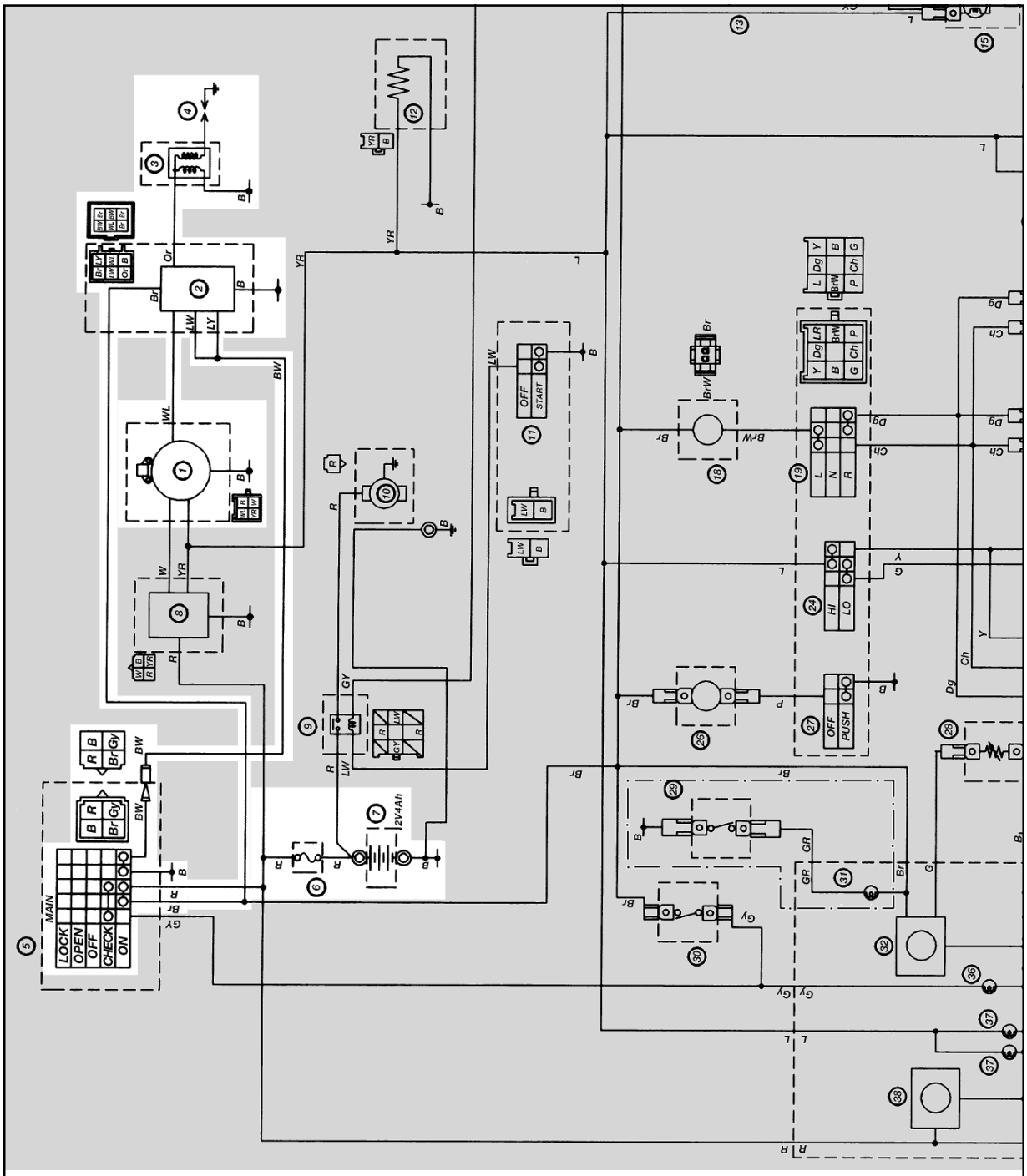

① DC-CDI magneto (pickup coil)
② DC-CDI unit
③ Ignition coil
④ Spark plug
⑤ Main switch
⑥ Fuse
⑦ Battery

Downloaded from www.Manualslib.com manuals search engine

EAS00736

TROUBLESHOOTING

The ignition system fails to operate (no spark or intermittent spark).

Check:
1. Spark plug
2. Ignition spark gap
3. Spark plug cap resistance
4. Ignition coil resistance
5. Main switch
6. Pickup coil resistance
7. Main fuse
8. Battery
9. Wiring connections (of the entire ignition system)

NOTE:

- Before troubleshooting, remove the following part(s):
  1. Front upper cover
  2. Footrest board
- Troubleshoot with the following special tool(s).

Ignition checker
90890-06754
Pocket tester
90890-03112

EAS00740

1. Spark plug

- Check the condition of the spark plug.
- Check the spark plug type.
- Measure the spark plug gap.
  Refer to "CHECKING THE SPARK PLUG" in chapter 3.

Standard spark plug
BR8HS (NGK)
Spark plug gap
0.6 ~ 0.7 mm

- Is the spark plug in good condition, is it of the correct type, and is its gap within specification?

YES

NO → Re-gap or replace the spark plug.

EAS00742

2. Ignition spark gap

- Disconnect the spark plug cap from the spark plug.
- Connect the ignition checker ① as shown.

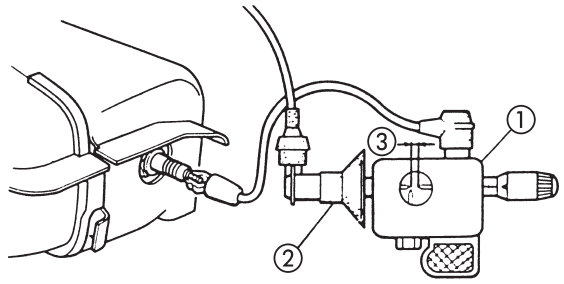

② Spark plug cap

- Set the main switch to "ON".
- Measure the ignition spark gap ③ .
- Crank the engine by pushing the starter switch and gradually increase the spark gap until a misfire occurs.

Minimum ignition spark gap
6,0 mm

- Is there a spark and is the spark gap within specification?

YES

NO → The ignition system is OK.

Downloaded from www.Manualslib.com manuals search engine

EAS00744

3. Spark plug cap resistance

- Remove the spark plug cap from the spark plug lead.
- Connect the pocket tester ("Ω x 1k" range) to the spark plug cap as shown.
- Measure the spark plug cap resistance.

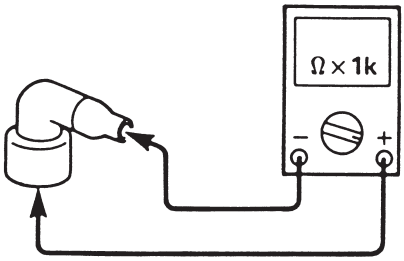

Spark plug cap resistance
10KΩ at 20°C

- Is the spark plug cap OK?

YES

NO

Replace the spark plug cap.

EAS00746

4. Ignition coil resistance

- Disconnect the ignition coil connectors from the ignition coil terminals.
- Connect the pocket tester (Ω x 1) to the ignition coil as shown.

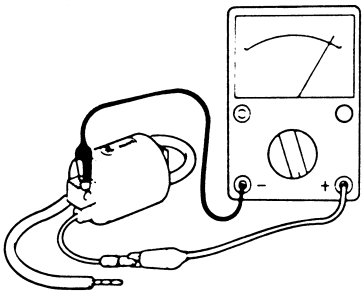

Positive tester probe → red/black
Negative tester probe → orange (gray)

- Measure the primary coil resistance.

Primary coil resistance
0.56 ~ 0.84 at 20°C

- Connect the pocket tester (Ω x 1k) to the ignition coil as shown.

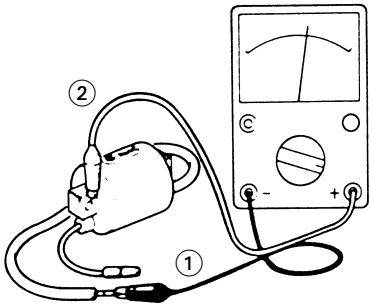

Negative tester probe → spark plug lead ①
Positive tester probe → ground ②

- Measure the secondary coil resistance.

Secondary coil resistance
5.68 ~ 8.52 kΩ at 20°C

- Is the ignition coil OK?

YES

NO

Replace the ignition coil.

EAS00749

5. Main switch

- Check the main switch for continuity. Refer to "CHECKING THE SWITCHES".
- Is the main switch OK?

YES

NO

Replace the main switch.

Downloaded from www.Manualslib.com manuals search engine

EAS00748

6. Pickup coil resistance

- Disconnect the pickup coil coupler from the wire harness.
- Connect the pocket tester (Ω x 100) to the pickup coil terminal as shown.

Positive tester probe → white/blue ①
Negative tester probe → ground ②

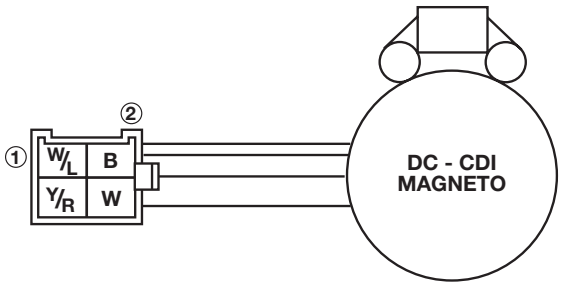

- Measure the pickup coil resistance.

Pickup coil resistance
460 ~ 600 Ω at 20°C
(between white/red and white/green)

- Is the pickup coil OK?

YES

NO

Replace the pickup coil.

EAS00738

7. Main fuse

- Check the fuse for continuity.
  Refer to "CHECKING THE FUSES" in chapter 3.
- Is the fuse OK?

YES

NO

Replace the fuse.

EAS00739

8. Battery

- Check the condition of the battery.
  Refer to "CHECKING AND CHARGING THE BATTERY" in chapter 3.

Minimum open-circuit voltage
12.8 V or more at 20°C

- Is the battery OK?

YES

NO

- Recharge or replace the battery.

EAS00754

9. Wiring

- Check the entire ignition system's wiring.
  Refer to "CIRCUIT DIAGRAM".
- Is the ignition system's wiring properly connected and without defects?

YES

Replace the DC-CDI unit.

NO

Properly connect or repair the ignition system's wiring.

Downloaded from www.Manualslib.com manuals search engine

EAS00755

ELECTRIC STARTING SYSTEM

CIRCUIT DIAGRAM

⑤ Main switch
⑥ Fuse
⑦ Battery
⑨ Starter relay
⑩ Starter motor
⑪ Start switch
⑬ Front brake switch
⑭ Rear brake switch

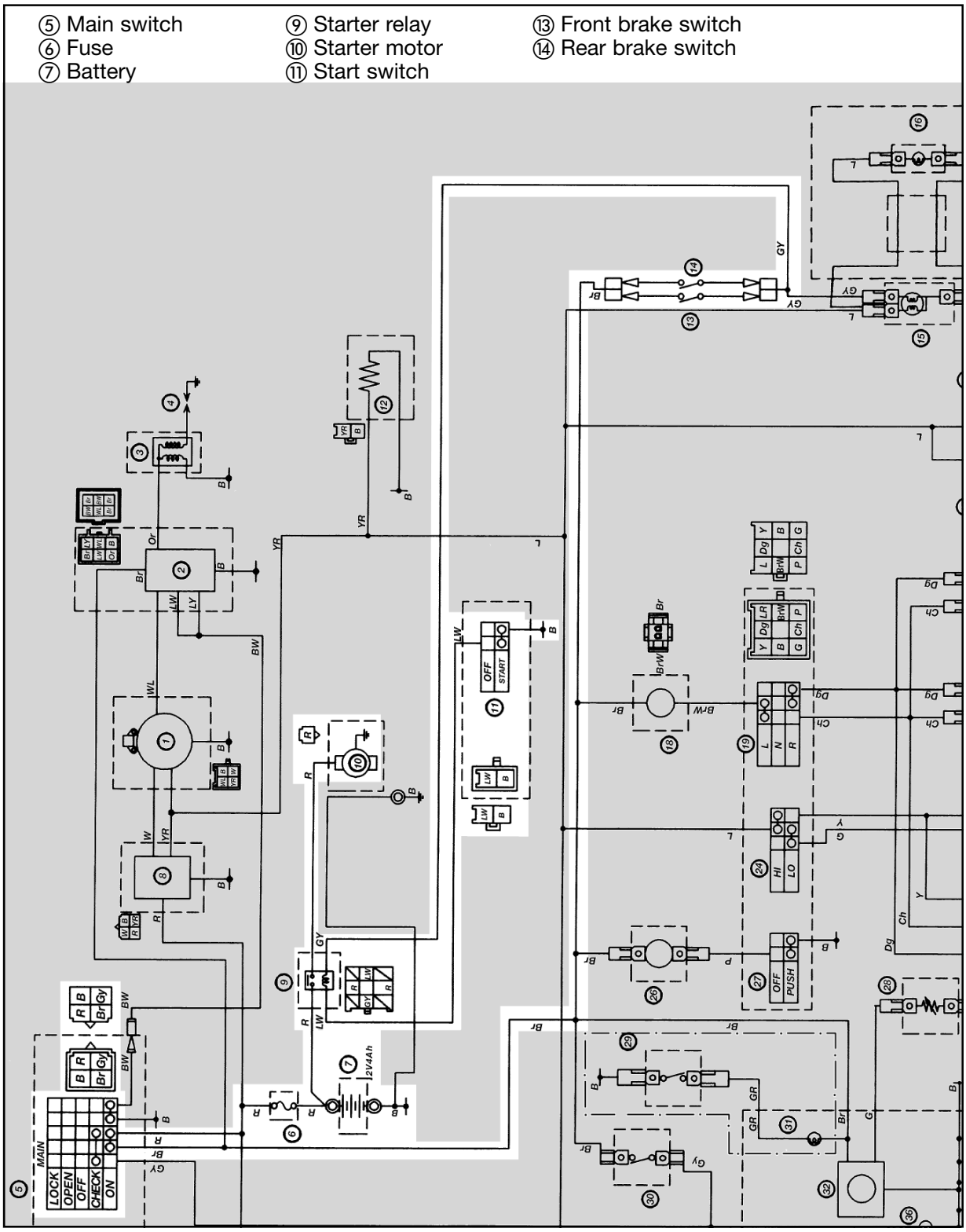

Downloaded from www.Manualslib.com manuals search engine

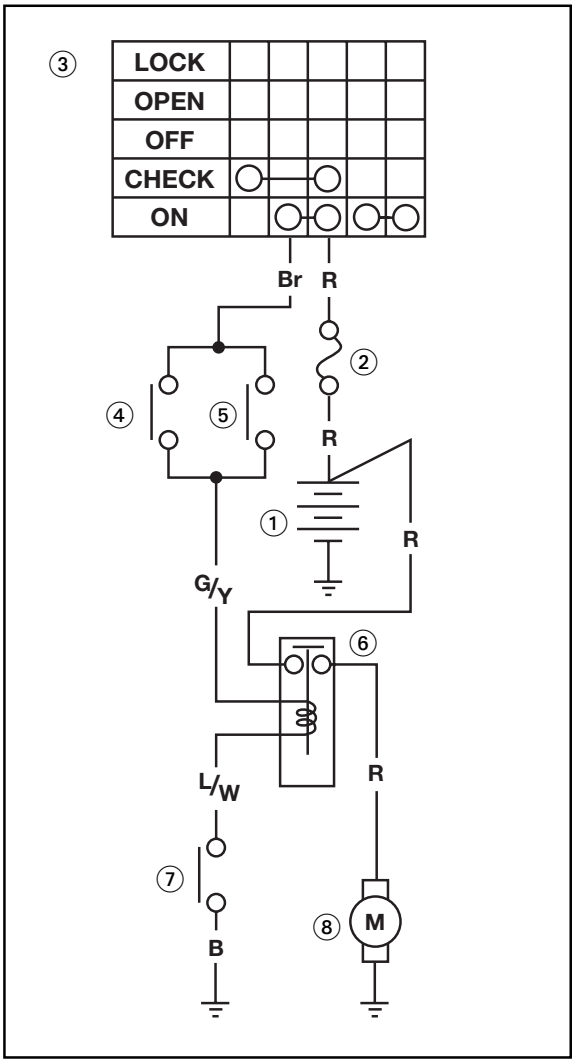

EAS00756

STARTING CIRCUIT CUT-OFF SYSTEM OPERATION

If the main switch is set to “ON” the starter motor can only operate if at least one of the following conditions is met:

- The front brake switch is ON.
- The rear brake switch is ON.

When at least one of the above conditions has been met the starter relay is closed and the engine can be started by pressing the starter switch.

① Battery
② Fuse
③ Main switch
④ Front brake switch
⑤ Rear brake switch
⑥ Starter relay
⑦ Start switch
⑧ Starter motor

Downloaded from www.Manualslib.com manuals search engine

EAS00757

TROUBLESHOOTING

The starter motor fails to turn.

Check:
1. main fuse
2. battery
3. starter motor
4. starter relay
5. main switch
6. start switch
7. wiring connections
   (of the entire starting system)

NOTE:

- Before troubleshooting, remove the following part(s):
  1. Front upper cowling
  2. Center cover
  3. Footrest board
  4. Handlebar cover (upper)
- Troubleshoot with the following special tool(s).

Pocket tester
90890-03112

EAS00738

1. Main fuse

- Check the fuse for continuity.
  Refer to "CHECKING THE FUSES" in chapter 3.
- Is the fuse OK?

YES

NO → Replace the fuse.

EAS00739

2. Battery

- Check the condition of the battery.
  Refer to "CHECKING AND CHARGING THE BATTERY" in chapter 3.

Minimum open-circuit voltage
12.8 V or more at 20°C

- Is the battery OK?

YES

NO → Recharge or replace the battery.

EAS00758

3. Starter motor

- Connect the positive battery terminal ① and starter motor lead ② with a jumper lead ③.

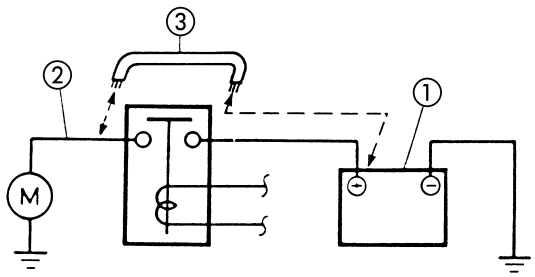

WARNING

- **A wire that is used as a jumper lead must have at least the same capacity or more as that of the battery lead, otherwise the jumper lead may burn.**
- **This check is likely to produce sparks, therefore make sure nothing flammable is in the vicinity.**

- Does the starter motor turn?

YES

NO → Repair or replace the starter motor.

Downloaded from www.Manualslib.com manuals search engine

EAS00761

4. Starter relay
• Disconnect the starter relay coupler from the coupler. • Connect the pocket tester (Ω x 1) and battery (12 V) to the starter relay coupler as shown.
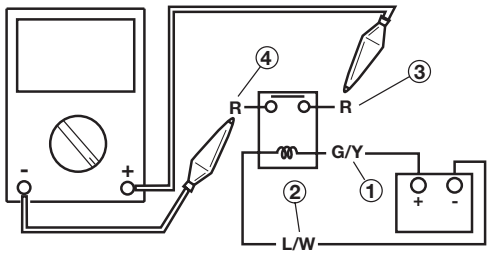
Positive battery terminal → green/yellow ① **Negative battery terminal → blue/white ②**
Positive tester probe → red ③ **Negative tester probe → red ④**
• Does the starter relay have continuity between red and red?

YES

NO → Replace the starter relay.

EAS00749

5. Main switch
• Check the main switch for continuity. Refer to “CHECKING THE SWITCHES”. • Is the main switch OK?

YES

NO → Replace the main switch.

EAS00764

6. Start switch
• Check the start switch for continuity. Refer to “CHECKING THE SWITCHES”. • Is the start switch OK?

YES

NO → Replace the right handlebar switch.

EAS00766

7. Wiring
• Check the entire starting system’s wiring. Refer to “CIRCUIT DIAGRAM”. • Is the starting system’s wiring properly connected and without defects?

YES → The starting system circuit is OK.

NO → Properly connect or repair the starting system’s wiring.

Downloaded from www.Manualslib.com manuals search engine

EAS00767
STARTER MOTOR

① O-ring
② Starter motor front cover
③ Rubber seal
④ Brush holder / brushes
⑤ Armature assembly
⑥ Starter motor rear cover
⑦ Wiring

Brush wear limit: **0.9 mm**
Commutator wear limit: **14.8 mm**
Mica lower cut-off: **1.15 mm**

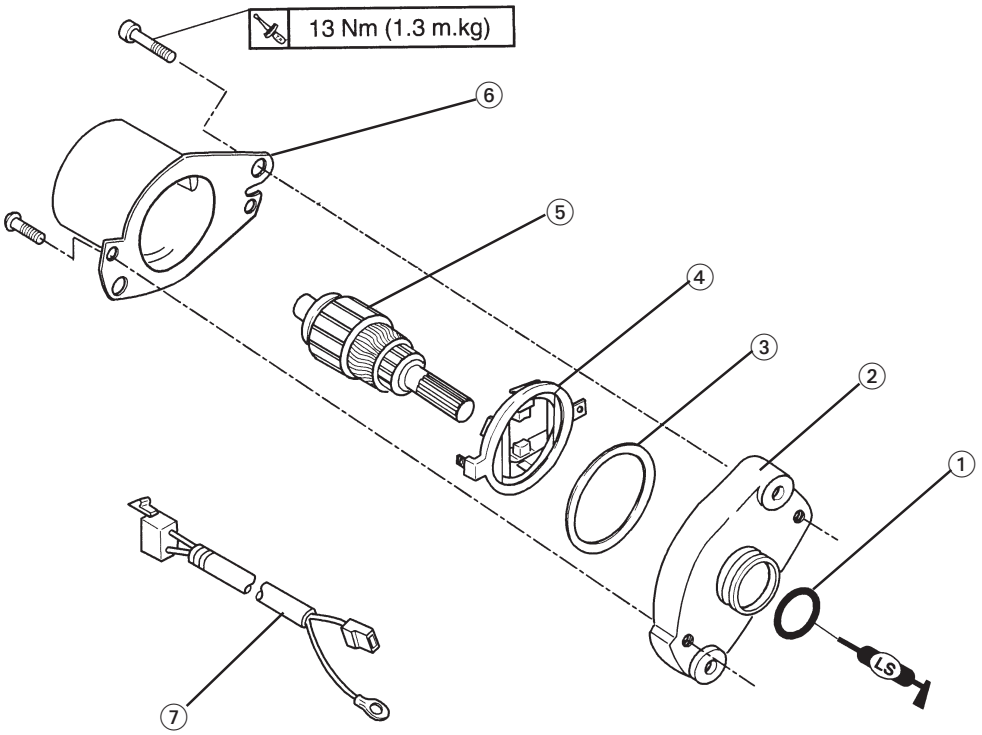

Downloaded from www.Manualslib.com manuals search engine

REMOVING THE STARTER MOTOR

1. Remove:
   - exhaust pipe assembly
   - rear wheel
   - starter motor

EAS00769

CHECKING THE STARTER MOTOR

1. Check:
   - commutator
     Dirt → Clean with 600-grit sandpaper.
2. Measure:
   - commutator diameter ⓐ
     Out of specification → Replace the starter motor.

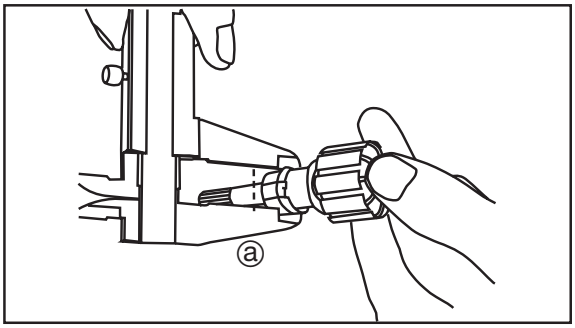

Commutator wear limit
14.8 mm

3. Measure:
   - armature assembly resistances (commutator and insulation)
     Out of specification → Replace the starter motor.

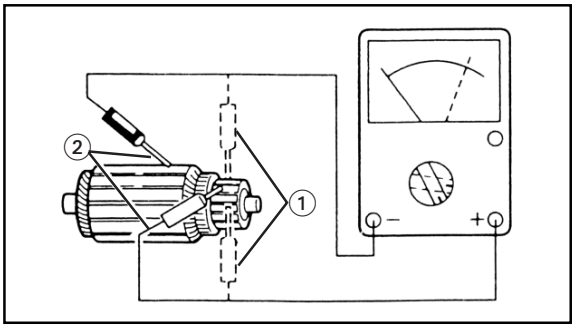

▼▼▼▼▼▼▼▼▼▼▼▼▼▼▼▼▼▼▼▼▼▼▼▼▼▼▼▼▼▼▼▼▼▼

a. Measure the armature assembly resistances with the pocket tester.

Pocket tester
90890-03112

Armature coil
Commutator resistance ①
0.064 ~ 0.079 Ω at 20°C
Insulation resistance ②
Above 1 MΩ at 20°C

b. If any resistance is out of specification, replace the starter motor.

▲▲▲▲▲▲▲▲▲▲▲▲▲▲▲▲▲▲▲▲▲▲▲▲▲▲▲▲▲▲▲▲▲▲

4. Measure:
   - brush length ⓐ
     Out of specification → Replace the brushes as a set.

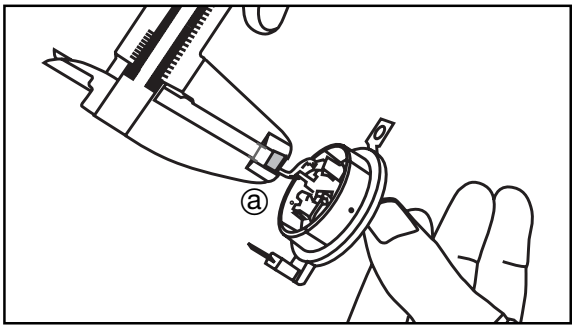

Brush length wear limit
0.9 mm

Downloaded from www.Manualslib.com manuals search engine

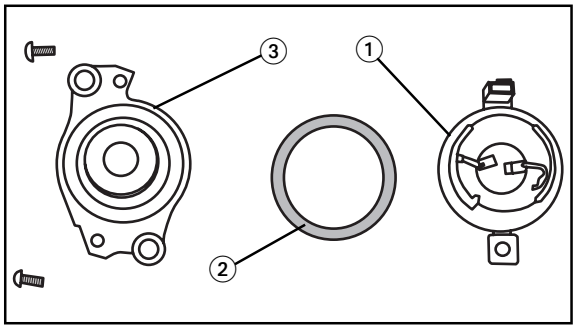

EAS00772

ASSEMBLING THE STARTER MOTOR

1. Install:
   - brush set ①
   - rubber seal ②
   - starter motor front cover ③

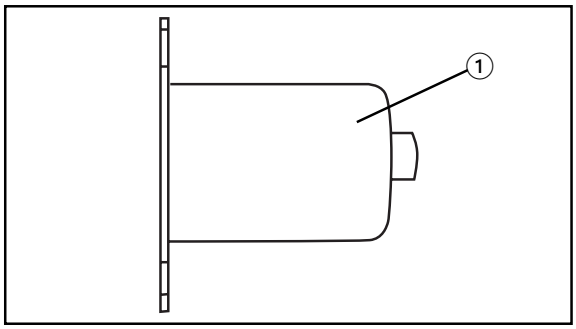

2. Install:
   - starter motor rear cover ①

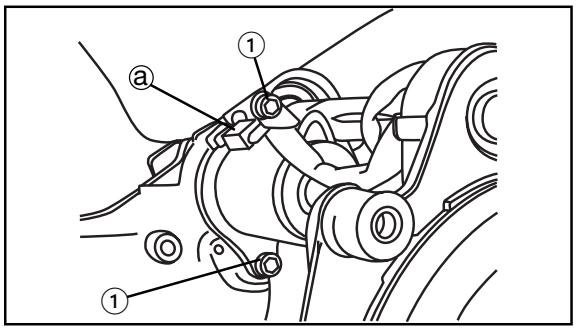

3. Install:
   - Starter motor bolts ①

	13 Nm (1.3 m • kg)

NOTE:

When install the starter motor the ground terminal ⓐ is installed with upper side bolt.

Downloaded from www.Manualslib.com manuals search engine

EAS00773

CHARGING SYSTEM

CIRCUIT DIAGRAM

① DC-CDI Magneto
⑥ Main fuse
⑦ Battery
⑧ Rectifier/regulator

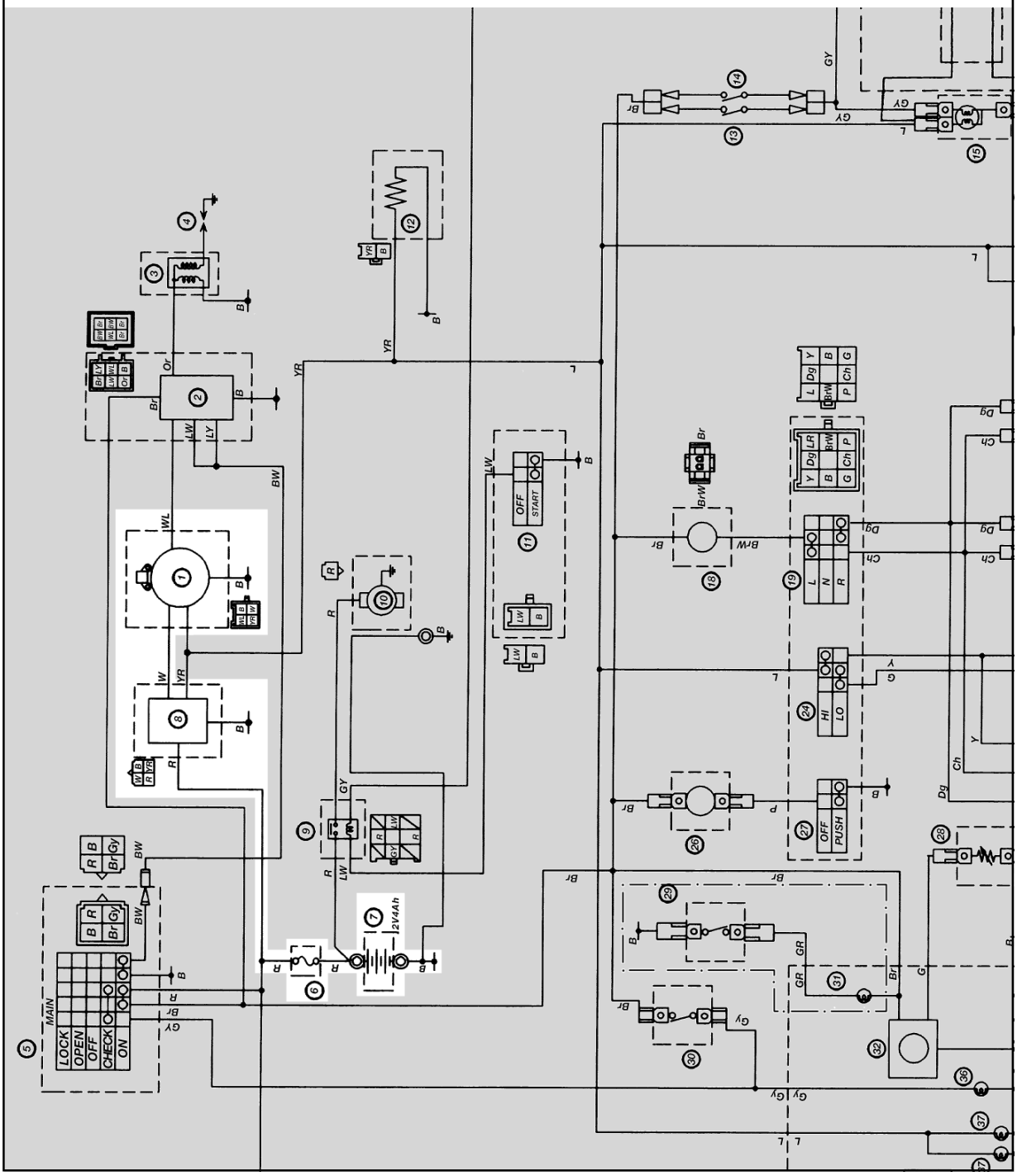

Downloaded from www.Manualslib.com manuals search engine

EAS00774

TROUBLESHOOTING

The battery is not being charged.

Check:
1. charging voltage
2. main fuse
3. battery
4. charging coil resistance
5. wiring connections
   (of the entire charging system)

NOTE:

- Before troubleshooting, remove the following part(s):
  1. Front upper cowling
  2. Footrest board
- Troubleshoot with the following special tool(s).

Engine tachometer
90890-03113
Pocket tester
90890-03112

EAS00775

1. Charging voltage

- Connect the engine tachometer to the spark plug lead.
- Connect the pocket tester (DC 20 V) to the battery.

Positive tester probe → positive battery terminal
Negative tester probe → negative battery terminal

- Start the engine and let it run at approximately 3000 r/min.
- Measure the charging voltage.

Charging voltage
12 V or more at 3000 r/min
15 V or less at 8000 r/min

NOTE:

Make sure the battery is fully charged.

- Is the charging voltage within specification?

NO → YES

The charging circuit is OK.

EAS00738

2. Main fuse

- Check the fuse for continuity.
  Refer to "CHECKING THE FUSES" in chapter 3.
- Is the fuse OK?

YES → NO

Replace the fuse.

EAS00739

3. Battery

- Check the condition of the battery.
  Refer to "CHECKING AND CHARGING THE BATTERY" in chapter 3.

Minimum open-circuit voltage
12.8 V or more at 20°C

- Is the battery OK?

YES → NO

- Clean the battery terminals.

- Recharge or replace the battery.

EAS00776

4. Charging coil resistance

- Disconnect the DC-CDI magneto coupler.
- Connect the pocket tester (Ω x 1) to the charging coils as shown.

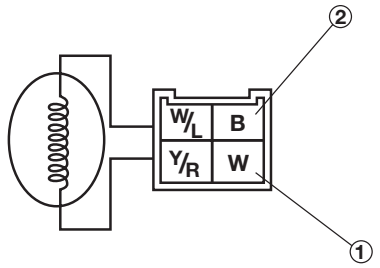

Downloaded from www.Manualslib.com manuals search engine

Positive tester probe → white ①
Negative tester probe → black ②

- Measure the charging coil resistance.

Charging coil resistance
0.288 ~ 0.432 Ω at 20°C

- Is the charging coil OK?

YES

NO → Replace the charging coil assembly.

EAS00779

5. Wiring

- Check the wiring connections of the entire charging system.
  Refer to "CIRCUIT DIAGRAM".
- Is the charging system's wiring properly connected and without defects?

YES → Replace the rectifier/regulator.

NO → Properly connect or repair the charging system's wiring.

Downloaded from www.Manualslib.com manuals search engine

EAS00780

LIGHTING SYSTEM

CIRCUIT DIAGRAM

① DC-CDI magneto (lighting coil)
⑮ Tail/brake light
⑯ License light (for UK only)
⑰ Auxiliary light
㉔ Dimmer switch
㉕ Headlight
㉟ High beam indicator light
㊲ Meter light

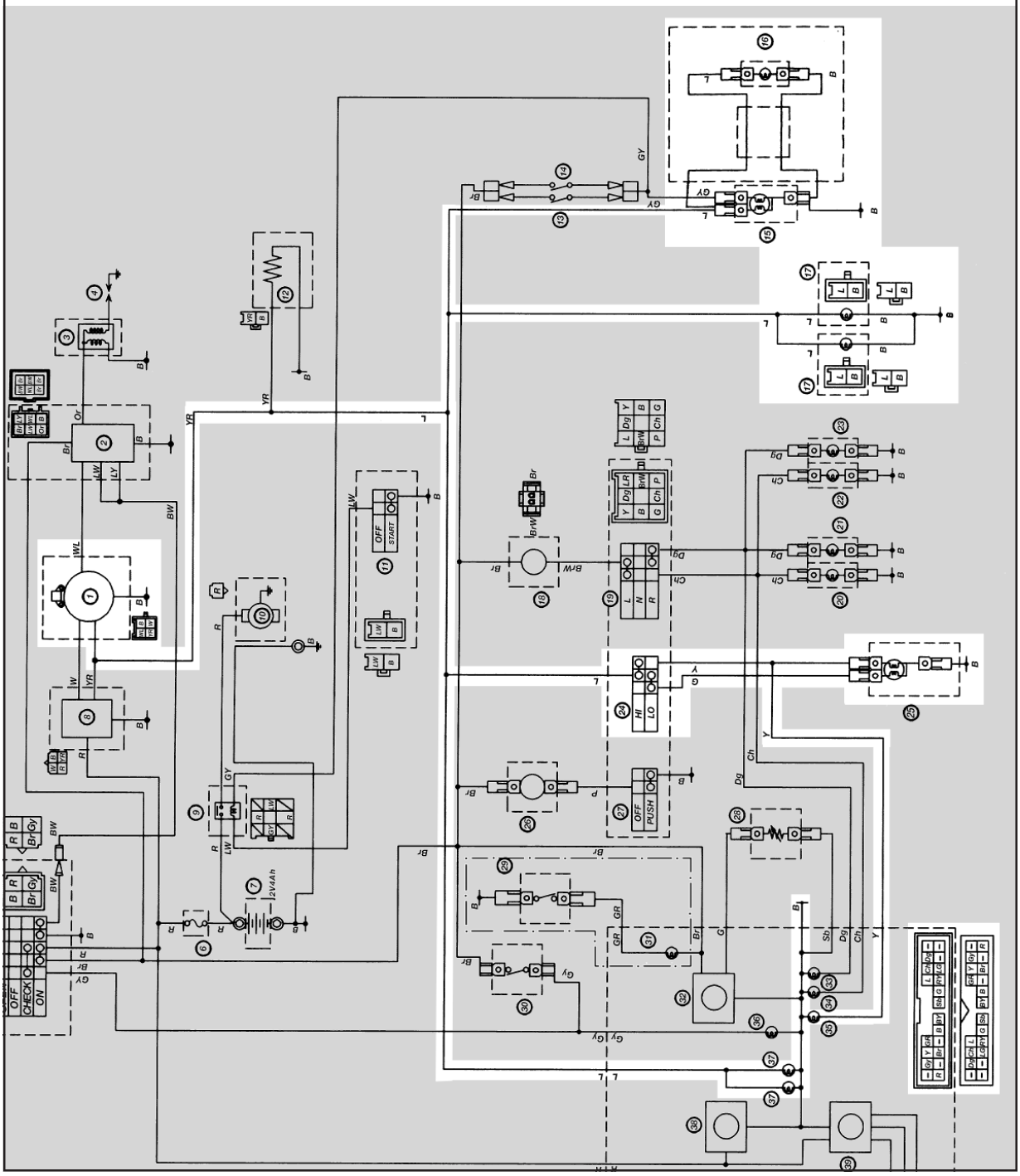

Downloaded from www.Manualslib.com manuals search engine

EAS00782

TROUBLESHOOTING

Any of the following fail to light: headlight, high beam indicator light, taillight, position light, and meter light.

Check:
1. lighting coil resistance
2. dimmer switch
3. wiring connections
   (of the entire charging system)

NOTE:

- Before troubleshooting, remove the following part(s):
  1. Front upper cowling
  2. Footrest board
  3. Handlebar cover (upper)
- Troubleshoot with the following special tool(s).

Pocket tester
90890-03112

1. Lighting coil resistance

- Disconnect the DC-CDI magneto coupler.
- Connect the pocket tester (Ωx1) to the lighting coil as shown.

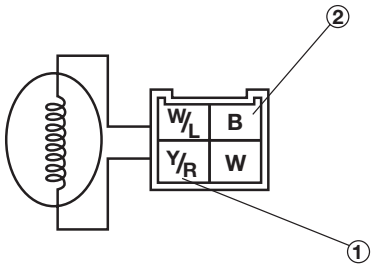

Positive tester probe → Yellow/red ①
Negative tester probe → black ②

- Measure the lighting coil resistance.

Lighting coil resistance:
0.116 ~0.264 Ω at 20°C

- Is the lighting coil OK?

YES

NO → Replace the lighting coil assembly

EAS00784

2. Dimmer switch

- Check the dimmer switch for continuity. Refer to "CHECKING THE SWITCHES".
- Is the dimmer switch OK?

YES

NO → The dimmer switch is faulty. Replace the left handlebar switch.

EAS00787

3. Wiring

- Check the entire lighting system's wiring. Refer to "CIRCUIT DIAGRAM".
- Is the lighting system's wiring properly connected and without defects?

YES → Check the condition of each of the lighting system's circuits. Refer to "CHECKING THE LIGHTING SYSTEM".

NO → Properly connect or repair the lighting system's wiring.

Downloaded from www.Manualslib.com manuals search engine

EAS00788

CHECKING THE LIGHTING SYSTEM

1. The headlight and the high beam indicator light fail to come on.

1. Headlight bulb and socket

- Check the headlight bulb and socket for continuity.
  Refer to "CHECKING THE BULBS AND BULB SOCKETS"
- Are the headlight bulb and socket OK?

YES → NO → Replace the headlight bulb, socket or both.

2. Voltage

- Connect the pocket tester (DC 20 V) to the headlight and high beam indicator light couplers as shown.

A When the dimmer switch is set to "HI"
When the dimmer switch is set to "LO"
Headlight coupler (wire harness side)

Headlight
Positive tester probe → yellow ① or green ②
Negative tester probe → black ③

High beam indicator light
Positive tester probe → yellow ④
Negative tester probe → black ⑤

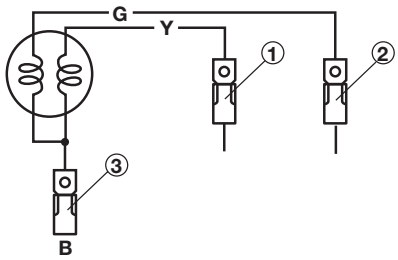

A

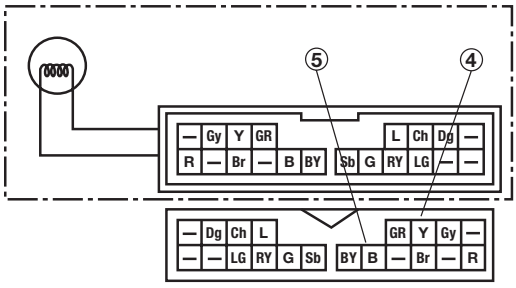

Meter light coupler (wire harness side)
- Set the main switch to "ON".
- Start the engine.
- Set the dimmer switch to "HI" or "LO".
- Measure the voltage (DC 12 V) of yellow ① or green ② on the headlight coupler (wire harness side).
- Is the voltage within specification?

YES → This circuit is OK.

NO → The wiring circuit from the main switch to the headlight coupler is faulty and must be repaired.

EAS00789

2. The meter light fails to come on.

1. Meter light bulb and socket

- Check the meter light bulb and socket for continuity.
  Refer to "CHECKING THE BULBS AND BULB SOCKETS"
- Are the meter light bulb and socket OK?

YES → NO → Replace the meter light bulb, socket or both.

2. Voltage

- Connect the pocket tester (DC 20 V) to the meter light coupler (wire harness side) as shown.

Positive tester probe → blue ①
Negative tester probe → black ②

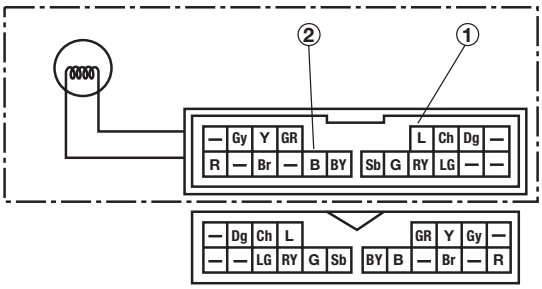

Downloaded from www.Manualslib.com manuals search engine

- Set the main switch to “ON”.
- Start the engine.
- Measure the voltage (DC 12 V) of blue ① on the meter light coupler (wire harness side).
- Is the voltage within specification?

YES → This circuit is OK.

NO → The wiring circuit from the main switch to the meter light coupler is faulty and must be repaired.

EAS00790

3. The tail/brake light fails to come on.

1. Tail/brake light bulb and socket

- Check the tail/brake light bulb and socket for continuity.
  Refer to “CHECKING THE BULBS AND BULB SOCKETS”
- Are the tail/brake light bulb and socket OK?

YES

NO → Replace the tail/brake light bulb, socket or both.

2. Voltage

- Connect the pocket tester (DC 20 V) to the tail/brake light coupler (wire harness side) as shown.

Positive tester probe → blue ①
Negative tester probe → black ②

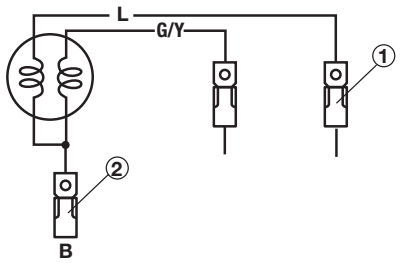

- Set the main switch to “ON”.
- Start the engine.
- Measure the voltage (DC 12 V) of blue ① on the tail/brake light coupler (tail/brake light side).
- Is the voltage within specification?

YES → This circuit is OK.

NO → Wiring circuit from the main switch to the tail/brake light coupler is faulty and must be repaired.

EAS00791

4. The position light fails to come on.

1. Position light bulb and socket

- Check the position light bulb and socket for continuity.
  Refer to “CHECKING THE BULBS AND BULB SOCKETS”
- Are the position light bulb and socket OK?

YES

NO → Replace the position light bulb, socket or both.

2. Voltage

- Connect the pocket tester (DC 20 V) to the position light coupler (wire harness side) as shown.

Positive tester probe → blue ①
Negative tester probe → black ②

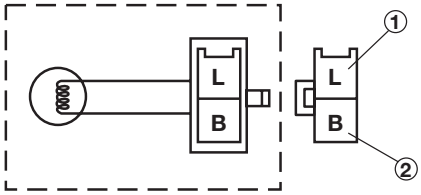

Downloaded from www.Manualslib.com manuals search engine

- Set the main switch to “ON”.
- Start the engine.
- Measure the voltage (DC 12 V) of blue ① on the position light coupler (positionlight side).
- Is the voltage within specification?

YES

This circuit is OK.

NO

Wiring circuit from the main switch to the position light coupler is faulty and must be repaired.

Downloaded from www.Manualslib.com manuals search engine

EAS00793

SIGNALING SYSTEM

CIRCUIT DIAGRAM

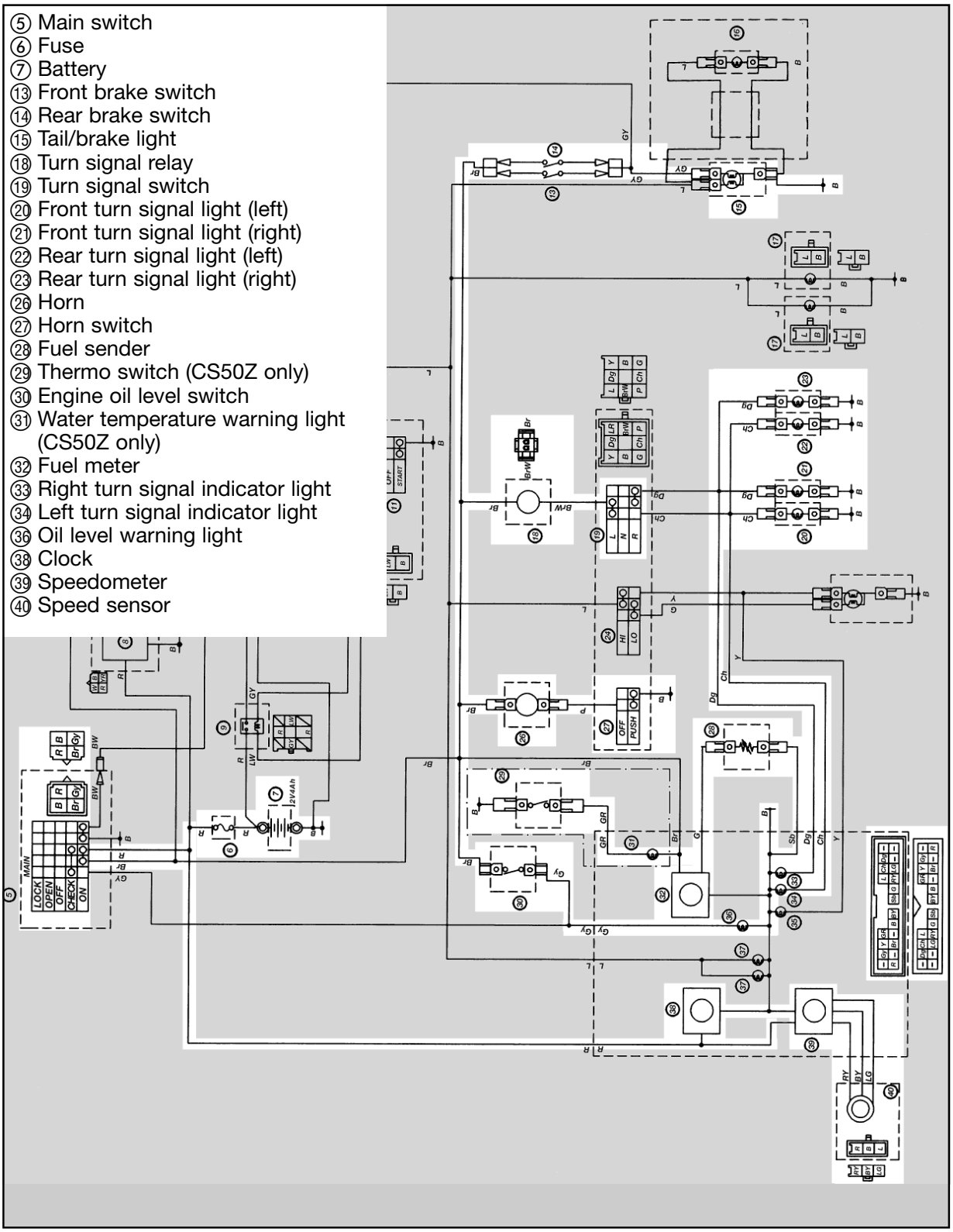

Downloaded from www.Manualslib.com manuals search engine

EAS00794

TROUBLESHOOTING

•Any of the following fail to light: flasher light, brake light or an indicator light.
•The horn fails to sound.

Check:
1. main fuse
2. battery
3. main switch
4. wiring connections
   (of the entire signaling system)

NOTE:

- Before troubleshooting, remove the following part(s):
  1. Front upper cowling
  2. Footrest board
  3. Handlebar cover (upper)
- Troubleshoot with the following special tool(s).

Pocket tester
90890-03112

EAS00738

1. Main fuse

- Check the fuse for continuity.
  Refer to "CHECKING THE FUSES" in chapter 3.
- Is the fuse OK?

YES → NO → Replace the fuse.

EAS00739

2. Battery

- Check the condition of the battery.
  Refer to "CHECKING AND CHARGING THE BATTERY" in chapter 3.

Minimum open-circuit voltage
12.8 V or more at 20°C

- Is the battery OK?

YES → • Clean the battery terminals.

NO → • Recharge or replace the battery.

EAS00749

3. Main switch

- Check the main switch for continuity.
  Refer to "CHECKING THE SWITCHES".
- Is the main switch OK?

YES

NO → Replace the main switch.

EAS00795

4. Wiring

- Check the entire signal system's wiring.
  Refer to "CIRCUIT DIAGRAM".
- Is the signaling system's wiring properly connected and without defects?

YES → Check the condition of each of the signaling system's circuits.
Refer to "CHECKING THE SIGNALING SYSTEM".

NO → Properly connect or repair the signaling system's wiring.

Downloaded from www.Manualslib.com manuals search engine

EAS00796

CHECKING THE SIGNALING SYSTEM

1. The horn fails to sound.

1. Horn switch

- Check the horn switch for continuity. Refer to “CHECKING THE SWITCHES”.
- Is the horn switch OK?

YES

NO → Replace the left handlebar switch.

2. Voltage

- Connect the pocket tester (DC 20 V) to the horn connector at the horn terminal as shown.

Positive tester probe → brown ①
Negative tester probe → ground

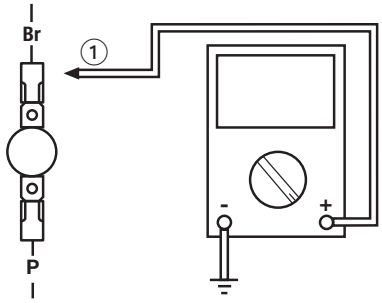

- Set the main switch to “ON”.
- Measure the voltage (DC 12 V) of brown at the horn terminal.
- Is the voltage within specification?

YES

NO → The wiring circuit from the main switch to the horn connector is faulty and must be repaired.

3. Horn

- Disconnect the pink connector at the horn terminal.
- Connect a jumper lead to the horn terminal and ground the jumper lead.
- Set the main switch to “ON”.
- Does the horn sound?

YES

NO → Replace the horn.

4. Voltage

- Disconnect the pink and brown connectors at the horn terminal.
- Connect the pocket tester (DC 20 V) to the horn connectors as shown.

Positive tester probe → brown ①
Negative tester probe → pink ②

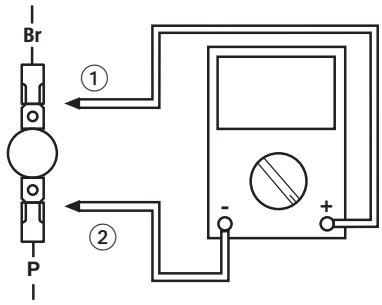

- Set the main switch to “ON”. Push horn switch
- Measure the voltage (DC 12 V) of pink ① at the horn terminal.
- Is the voltage within specification?

YES → This circuit is OK.

NO → The wiring circuit or horn switch is faulty and must be repaired.

Downloaded from www.Manualslib.com manuals search engine

EAS00798

2. The tail/brake light fails to come on.

1. Tail/brake light bulb and socket

- Check the tail/brake light bulb and socket for continuity.
  Refer to "CHECKING THE BULBS AND BULB SOCKETS"
- Are the tail/brake light bulb and socket OK?

YES → NO → Replace the tail/brake light bulb, socket or both.

2. Brake light switches

- Check the brake light switches for continuity.
  Refer to "CHECKING THE SWITCHES".
- Is the brake light switch OK?

YES → NO → Replace the brake light switch.

3. Voltage

- Connect the pocket tester (DC 20 V) to the tail/brake light coupler (wire harness side) as shown.

Positive tester probe → green/yellow ①
Negative tester probe → black ②

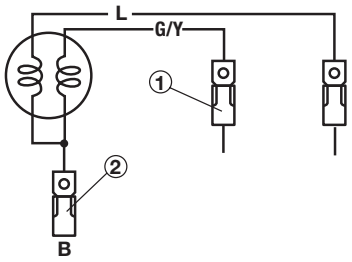

- Set the main switch to "ON".
- Pull in the brake levers.
- Measure the voltage (DC 12 V) of green/yellow ① on the tail/brake light coupler (wire harness side).
- Is the voltage within specification?

YES → This circuit is OK.

NO → The wiring circuit from the main switch to the tail/brake light coupler is faulty and must be repaired.

EAS00799

3. The turn signal light, turn signal indicator light or both fail to blink.

1. Turn signal indicator light bulb and socket

- Check the turn signal light bulb and socket for continuity.
  Refer to "CHECKING THE BULBS AND BULB SOCKETS"
- Are the turn signal light bulb and socket OK?

YES → NO → Replace the turn signal light bulb, socket or both.

2. Turn signal switch

- Check the turn signal switch for continuity.
  Refer to "CHECKING THE SWITCHES".
- Is the turn signal switch OK?

YES → NO → Replace the left handlebar switch.

Downloaded from www.Manualslib.com manuals search engine

3. Voltage

- Connect the pocket tester (DC 20 V) to the turn signal relay coupler (wire harness side) as shown.

Positive tester probe → brown ①
Negative tester probe → ground

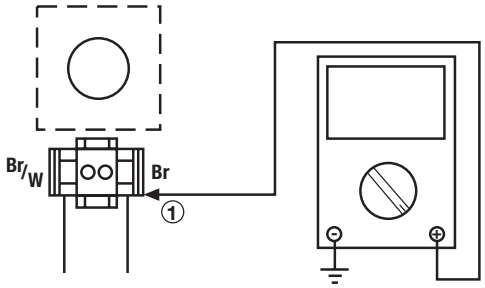

- Set the main switch to "ON".
- Measure the voltage (DC 12 V) on brown ① at the turn signal relay coupler (wire harness side).
- Is the voltage within specification?

YES

NO

The wiring circuit from the main switch to the turn signal relay coupler is faulty and must be repaired.

4. Voltage

- Connect the pocket tester (DC 20 V) to the turn signal relay coupler (wire harness side) as shown.

Positive tester probe → brown/white ①
Negative tester probe → ground

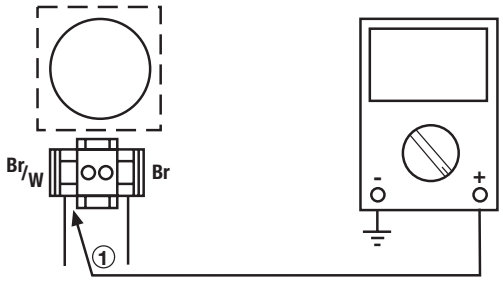

- Set the main switch to "ON".
- Set the turn signal switch to "L" or "R".
- Measure the voltage (DC 12 V) on brown/white ① at the turn signal relay coupler (wire harness side).
- Is the voltage within specification?

YES

NO

The turn signal relay is faulty and must be replaced.

5. Voltage

- Connect the pocket tester (DC 20 V) to the turn signal light connector or meter coupler (wire harness side) as shown.

Turn signal light
Turn signal indicator light

Left turn signal light
Positive tester probe → chocolate ①
Negative tester probe → ground

Right turn signal light
Positive tester probe → dark green ②
Negative tester probe → ground

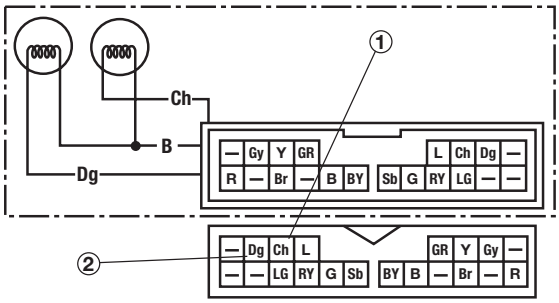

Downloaded from www.Manualslib.com manuals search engine

- Set the main switch to “ON”.
- Set the turn signal switch to “L” or “R”.
- Measure the voltage (DC 12 V) of the chocolate ① or dark green 2 at the turn signal light connector (wire harness side).
- Is the voltage within specification?

YES → This circuit is OK.

NO → The wiring circuit from the turn signal switch to the turn signal light connector is faulty and must be repaired.

EAS00802

4. The oil level warning light fails to come on.

1. Oil level warning light bulb and socket

- Check the oil level warning light bulb and socket for continuity.
  Refer to “CHECKING THE BULBS AND BULB SOCKETS”
- Are the oil level warning light bulb and socket OK?

YES

NO → Replace the oil level warning light bulb, socket or both.

2. Engine oil level switch

- Drain the engine oil and remove the engine oil level switch from the oil pan.
- Check the engine oil level switch for continuity.
  Refer to “CHECKING THE SWITCHES”.
- Is the engine oil level switch OK?

YES

NO → Replace the engine oil level switch.

3. Voltage

- Connect the pocket tester (DC 20 V) to the meter coupler (wire harness side) as shown.

Positive tester probe → green/yellow ①
Negative tester probe → black ②

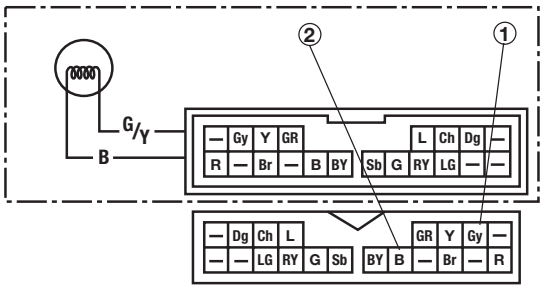

- Set the main switch to “ON”.
- Measure the voltage (DC 12 V) of green/yellow ① and black ② at the meter coupler.
- Is the voltage within specification?

YES → This circuit is OK.

NO → The wiring circuit from the main switch to the meter coupler is faulty and must be repaired.

EAS00804

5. The fuel level gauge fails to operate.

1. Fuel sender

- Remove the fuel sender from the fuel tank.
- Connect the pocket tester to the fuel sender coupler (wire harness side) as shown.

Positive tester probe → green ①
Negative tester probe → sky blue ②

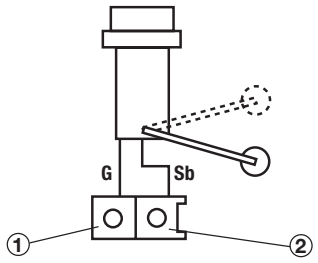

Downloaded from www.Manualslib.com manuals search engine

• Measure the fuel sender resistances.

Fuel sender resistance (up position "F")
(Ω x 1)
1.5 ~ 7.5 Ω at 20°C (68°F)
Fuel sender resistance (down position "E")
(Ω x 10)
90 ~ 100 Ω at 20°C (68°F)

• Is the fuel sender OK?

YES

NO

Replace the fuel sender.

2. Voltage

• Connect the pocket tester (DC 20 V) to the meter coupler (wire harness side) as shown.

Positive tester probe → green ①
Negative tester probe → sky blue ②

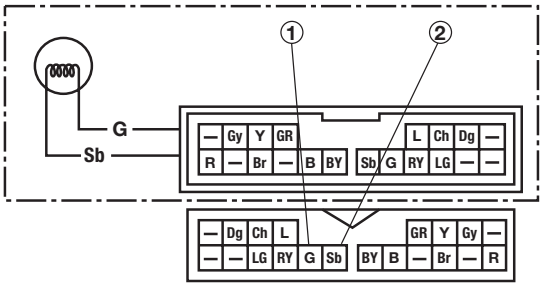

• Set the main switch to "ON".
• Measure the voltage (DC 12 V) of green ① on the meter light coupler (wire harness side).
• Is the voltage within specification?

YES

NO

Check the wiring connections of the entire signaling system.

3. Fuel level gauge

• Set the main switch to "ON".
• Move the float up or down.
• Check that the display segments of the fuel level gauge increase or decrease to "E" or "F".

NOTE:

Before reading the fuel level gauge, leave the float in one position (either up or down) for at least three minutes.

• Does the fuel level gauge needle move appropriately?

YES

NO

Replace the fuel level gauge.

4. Wiring

Check the entire signaling system's wiring.

EAS00806

6. The speedometer fails to come on.

1. Voltage

• Connect the pocket tester (DC 20 V) to the multi-function meter socket coupler (wire harness side) as shown.

Positive tester probe → red/yellow ①
Negative tester probe → black/yellow ②

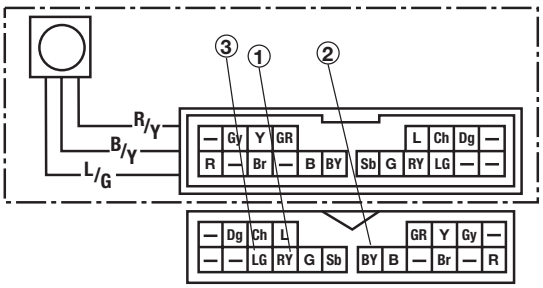

Downloaded from www.Manualslib.com manuals search engine

- Set the main switch to “ON”.
- Measure the voltage (DC 12 V) of red/yellow ① on the multi-function meter coupler (wire harness side).
- Is the voltage within specification?

YES

NO

The wiring circuit from the main switch to the multi-function meter bulb socket coupler (wire harness side) is faulty, repair it.

2. Speed sensor

- Connect the pocket tester (DC 20 V) to the speed sensor coupler (wire harness side) as shown.

Positive tester probe → blue/green ①
Negative tester probe → black/yellow ②

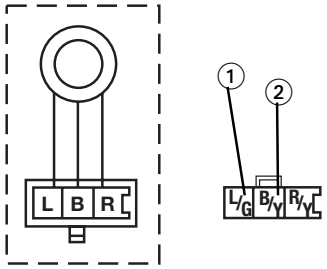

- Set the main switch to “ON”.
- Elevate the front wheel and slowly rotate it.
- Measure the voltage (DC 12 V) of red/yellow and black/yellow. With each full rotation of the front wheel, the voltage reading should cycle from 0 V to 5 ~ 11V to 0 V to 5 ~ 11V.
- Does the voltage reading cycle correctly?

YES

This circuit is OK.

NO

Replace the speed sensor.

EAS00802

7. The water temperature warning light fails to come on (CS50Z only).

1. Water temperature warning light bulb and socket

- Check the water temperature warning light bulb and socket for continuity.
  Refer to “CHECKING THE BULBS AND BULB SOCKETS”
- Are the water temperature warning light bulb and socket OK?

YES

NO

Replace the water temperature warning light bulb, socket or both.

EAS00811

2. Thermo switch

- Remove the thermo switch from the cylinder head.
- Connect the pocket tester (Ω x 1) to the thermo switch ① as shown.

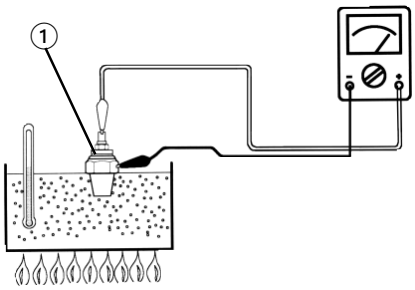

- Immerse the thermo switch in a container filled with coolant.
- Place a thermometer in the coolant.
- Slowly heat the coolant, then let it cool down to the specified temperature.
- Check the thermo switch for continuity at the temperatures indicated below.

Test step	Coolant temperature / Thermo switch	Continuity
1	0 ~ 120 ± 3°C	NO
2	More than 120 ± 3°C	YES
3*	120 ± 3°C to 113 ± 3°C	YES
4*	Less than 113 ± 3°C	NO

Steps 1 & 2: Heating phase
Steps 3* & 4*: Cooling phase

Downloaded from www.Manualslib.com manuals search engine

WARNING

- **Handle the thermo switch with special care.**
- **Never subject the thermo switch to strong shocks. If the thermo switch is dropped, replace it.**

Thermo switch
16 Nm (1.6m • kg)
Three bond sealock® 10

- Does the thermo switch operate properly as described above?

YES

NO

Replace the thermo switch

3. Voltage

- Connect the pocket tester (DC 20 V) to the meter coupler (wire harness side) as shown.

Positive tester probe → brown ①
Negative tester probe → green/red ②

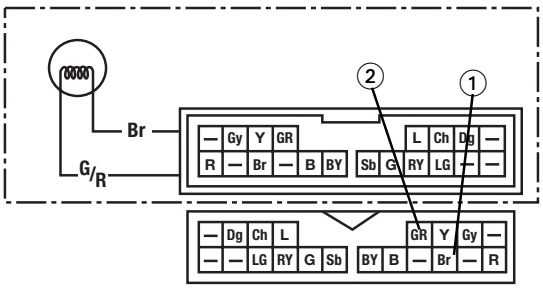

- Set the main switch to "ON".
- Measure the voltage (DC 12 V) of brown ① and green/red ① at the meter coupler.
- Is the voltage within specification?

YES

NO

The circuit is OK.

The wiring circuit from the main switch to the meter coupler is faulty and must be repaired.

Downloaded from www.Manualslib.com manuals search engine

?

TRBL
SHTG

9

Downloaded from www.Manualslib.com manuals search engine

CHAPTER 9
TROUBLESHOOTING

STARTING FAILURE / HARD STARTING 9-1
ENGINE 9-1
FUEL SYSTEM 9-1
ELECTRICAL SYSTEM 9-2

INCORRECT ENGINE IDLING SPEED 9-2
ENGINE 9-2
FUEL SYSTEM 9-2
ELECTRICAL SYSTEM 9-2

POOR MEDIUM-AND-HIGH-SPEED PERFORMANCE 9-3
ENGINE 9-3
FUEL SYSTEM 9-3

FAULTY CLUTCH 9-3
ENGINE OPERATES BUT SCOOTER WILL NOT MOVE 9-3
CLUTCH SLIPS 9-3
POOR STARTING PERFORMANCE 9-3
POOR SPEED PERFORMANCE 9-3

OVERHEATING 9-4
ENGINE 9-4
COOLING SYSTEM 9-4
FUEL SYSTEM 9-4
CHASSIS 9-4
ELECTRICAL SYSTEM 9-4

OVERCOOLING (CS50Z only) 9-4
COOLING SYSTEM 9-4

POOR BRAKING PERFORMANCE 9-4

FAULTY FRONT FORK LEGS 9-5
LEAKING OIL 9-5
MALFUNCTION 9-5

UNSTABLE HANDLING 9-5

FAULTY LIGHTING OR SIGNALING SYSTEM 9-6
HEADLIGHT DOES NOT COME ON.....9-6
HEADLIGHT BULB BURNT OUT 9-6
TAIL/BRAKE LIGHT DOES NOT COME ON 9-6
TAIL/BRAKE LIGHT BULB BURNT OUT 9-6
TURN SIGNAL DOES NOT COME ON 9-6
TURN SIGNAL BLINKS SLOWLY 9-6
TURN SIGNAL REMAINS LIT 9-6
TURN SIGNAL BLINKS QUICKLY.....9-6
HORN DOES NOT SOUND 9-6

Downloaded from www.Manualslib.com manuals search engine

EAS00845

TROUBLESHOOTING

NOTE:

The following guide for troubleshooting does not cover all the possible causes of trouble. It should be helpful, however, as a guide to basic troubleshooting. Refer to the relative procedure in this manual for checks, adjustments, and replacement of parts.

STARTING FAILURE/ HARD STARTING

ENGINE

Cylinder(s) and cylinder head(s)
- Loose spark plug
- Loose cylinder head or cylinder
- Damaged cylinder head gasket
- Damaged cylinder gasket
- Worn or damaged cylinder

Piston(s) and piston ring(s)
- Improperly installed piston ring
- Damaged, worn or fatigued piston ring
- Seized piston ring
- Seized or damaged piston

Air filter
- Improperly installed air filter
- Clogged air filter element

Crankcase and crankshaft
- Improperly assembled crankcase
- Seized crankshaft

FUEL SYSTEM

Fuel tank
- Empty fuel tank
- Clogged fuel tank cap breather hole
- Deteriorated or contaminated fuel
- Clogged or damaged fuel hose

Fuel pump
- Faulty fuel pump
- Faulty fuel pump relay
- Damaged vacuum hose
- Improperly routed hose

Carburetor(s)
- Deteriorated or contaminated fuel
- Clogged pilot jet
- Clogged pilot air passage
- Sucked-in air
- Damaged float
- Worn needle valve
- Improperly installed needle valve seat
- Incorrect fuel level
- Improperly adjusted pilot air screw
- Improperly installed pilot jet
- Clogged starter jet
- Clogged emulsion tube

Autochoke unit
- Faulty starter plunger
- Improperly adjusted starter cable
- Faulty ignitor unit
- Faulty thermo switch

Downloaded from www.Manualslib.com manuals search engine

ELECTRICAL SYSTEMS

Battery
- Discharged battery
- Faulty battery

Fuse(s)
- Blown, damaged or incorrect fuse
- Improperly installed fuse

Spark plug(s)
- Incorrect spark plug gap
- Incorrect spark plug heat range
- Fouled spark plug
- Worn or damaged electrode
- Worn or damaged insulator
- Faulty spark plug cap

Ignition coil(s)
- Cracked or broken ignition coil body
- Broken or shorted primary or secondary coils
- Faulty spark plug lead

Ignition system
- Faulty ignitor unit
- Faulty pickup coil
- Broken generator rotor woodruff key

Switches and wiring
- Faulty main switch
- Faulty engine stop switch
- Broken or shorted wiring
- Faulty front, rear or both brake light switches
- Faulty start switch
- Faulty sidestand switch
- Improperly grounded circuit
- Loose connections

Starting system
- Faulty starter motor
- Faulty starter relay
- Faulty starting circuit cut-off relay
- Faulty starter clutch

EAS00847

INCORRECT ENGINE IDLING SPEED

ENGINE

Cylinder(s) and cylinder head(s)
- Incorrect valve clearance
- Damaged valve train components

Air filter
- Clogged air filter element

FUEL SYSTEM

Carburetor(s)
- Faulty starter plunger
- Loose or clogged pilot jet
- Loose or clogged pilot air jet
- Damaged or loose carburetor joint
- Improperly synchronized carburetors
- Improperly adjusted engine idling speed (throttle stop screw)
- Improper throttle cable free play
- Flooded carburetor

Autochoke unit
- Faulty starter plunger
- Improperly adjusted starter cable
- Faulty ignitor unit

ELECTRICAL SYSTEMS

Battery
- Discharged battery
- Faulty battery

Spark plug(s)
- Incorrect spark plug gap
- Incorrect spark plug heat range
- Fouled spark plug
- Worn or damaged electrode
- Worn or damaged insulator
- Faulty spark plug cap

Ignition coil(s)
- Faulty spark plug lead

Ignition system
- Faulty ignitor unit
- Faulty pickup coil

Downloaded from www.Manualslib.com manuals search engine

EAS00848

POOR MEDIUM-AND-HIGH-SPEED PERFORMANCE

Refer to “STARTING FAILURES”.

ENGINE

Air filter
- Clogged air filter element

FUEL SYSTEM

Carburetor(s)
- Faulty diaphragm
- Incorrect fuel level
- Loose or clogged main jet

Fuel pump
- Faulty fuel pump

EAS00853

FAULTY CLUTCH

ENGINE OPERATES BUT SCOOTER WILL NOT MOVE

V-belt
- Bent, damaged or worn V-belt
- Slipping V-belt

Primary pulley cam and primary pulley slider
- Damaged or worn primary pulley cam
- Damaged or worn primary pulley slider

Clutch spring(s)
- Damaged clutch spring

Transmission gear(s)
- Damaged transmission gear

CLUTCH SLIPS
Clutch shoe spring(s)
- Damaged, loose or worn clutch shoe spring

Clutch shoe(s)
- Damaged or worn clutch shoe

Primary sliding sheave
- Seized primary sliding sheave

POOR STARTING PERFORMANCE
V-belt
- V-belt slips
- Oil or grease on the V-belt

Primary sliding sheave
- Faulty operation
- Worn pin groove
- Worn pin

Clutch shoe(s)
- Bent, damaged or worn clutch shoe

POOR SPEED PERFORMANCE
V-belt
- Oil or grease on the V-belt

Primary pulley weight(s)
- Faulty operation
- Worn primary pulley weight

Primary fixed sheave
- Worn primary fixed sheave

Primary sliding sheave
- Worn primary sliding sheave

Secondary fixed sheave
- Worn secondary fixed sheave

Secondary sliding sheave
- Worn secondary sliding sheave

Downloaded from www.Manualslib.com manuals search engine

EAS00855

OVERHEATING

ENGINE

Clogged coolant passages
- Cylinder head(s) and piston(s)
- Heavy carbon buildup

Engine oil
- Incorrect oil level
- Incorrect oil viscosity
- Inferior oil quality

COOLING SYSTEM (CS50Z only)

Coolant
- Low coolant level

Radiator
- Damaged or leaking radiator
- Bent or damaged radiator fin

Water pump
- Damaged or faulty water pump
- Thermostat
- Thermostat stays closed
- Oil cooler
- Clogged or damaged oil cooler
- Hose(s) and pipe(s)
- Damaged hose
- Improperly connected hose
- Damaged pipe
- Improperly connected pipe

FUEL SYSTEM

Carburetor(s)
- Incorrect main jet setting
- Incorrect fuel level
- Damaged or loose carburetor joint

Air filter
- Clogged air filter element

CHASSIS

Brake(s)
- Dragging brake

ELECTRICAL SYSTEMS

Spark plug(s)
- Incorrect spark plug gap
- Incorrect spark plug heat range

Ignition system
- Faulty ignitor unit

EAS00856

OVERCOOLING (CS50Z only)

COOLING SYSTEM

Thermostat

- Thermostat stays open

EAS00859

POOR BRAKING PERFORMANCE

Disc brake
- Worn brake pad
- Worn brake disc
- Air in hydraulic brake system
- Leaking brake fluid
- Faulty brake caliper kit
- Faulty brake caliper seal
- Loose union bolt
- Damaged brake hose
- Oil or grease on the brake disc
- Oil or grease on the brake pad
- Incorrect brake fluid level

Drum brake
- Worn brake shoe
- Worn or rusty brake drum
- Incorrect brake camshaft lever position
- Incorrect brake shoe position
- Damaged or fatigued brake shoe spring
- Oil or grease on the brake shoe
- Oil or grease on the brake drum
- Broken brake torque rod

Downloaded from www.Manualslib.com manuals search engine

EAS00861

FAULTY FRONT FORK LEGS

LEAKING OIL

- Bent, damaged or rusty inner tube
- Cracked or damaged outer tube
- Improperly installed oil seal
- Damaged oil seal lip
- Incorrect oil level (high)
- Loose damper rod assembly bolt
- Damaged damper rod assembly bolt copper washer
- Cracked or damaged cap bolt O-ring

MALFUNCTION

- Bent or damaged inner tube
- Bent or damaged outer tube
- Damaged fork spring
- Worn or damaged outer tube bushing
- Bent or damaged damper rod
- Incorrect oil viscosity
- Incorrect oil level

EAS00862

UNSTABLE HANDLING

Handlebar

- Bent or improperly installed handlebar

Steering head components

- Improperly installed upper bracket
- Improperly installed lower bracket (improperly tightened ring nut)
- Bent steering stem
- Damaged ball bearing or bearing race

Front fork leg(s)

- Uneven oil levels (both front fork legs)
- Unevenly tensioned fork spring (both front fork legs)
- Broken fork spring
- Bent or damaged inner tube
- Bent or damaged outer tube

Swingarm

- Worn bearing or bushing
- Bent or damaged swingarm

Rear shock absorber assembly(-ies)

- Faulty rear shock absorber spring
- Leaking oil or gas

Tire(s)

- Uneven tire pressures (front and rear)
- Incorrect tire pressure
- Uneven tire wear

Wheel(s)

- Incorrect wheel balance
- Deformed cast wheel
- Damaged wheel bearing
- Bent or loose wheel axle
- Excessive wheel runout

Frame

- Bent frame
- Damaged steering head pipe
- Improperly installed bearing race

Downloaded from www.Manualslib.com manuals search engine

EAS00866

FAULTY LIGHTING OR SIGNALING SYSTEM

HEADLIGHT DOES NOT COME ON
- Wrong headlight bulb
- Too many electrical accessories
- Hard charging
- Incorrect connection
- Improperly grounded circuit
- Poor contacts (main or light switch)
- Burnt-out headlight bulb

HEADLIGHT BULB BURNT OUT
- Wrong headlight bulb
- Faulty battery
- Faulty rectifier/regulator
- Improperly grounded circuit
- Faulty main switch
- Faulty light switch
- Headlight bulb life expired

TAIL/BRAKE LIGHT DOES NOT COME ON
- Wrong tail/brake light bulb
- Too many electrical accessories
- Incorrect connection
- Burnt-out tail/brake light bulb

TAIL/BRAKE LIGHT BULB BURNT OUT
- Wrong tail/brake light bulb
- Faulty battery
- Incorrectly adjusted rear brake light switch
- Tail/brake light bulb life expired

TURN SIGNAL DOES NOT COME ON
- Faulty turn signal switch
- Faulty turn signal relay
- Burnt-out turn signal bulb
- Incorrect connection
- Damaged or faulty wire harness
- Improperly grounded circuit
- Faulty battery
- Blown, damaged or incorrect fuse

TURN SIGNAL BLINKS SLOWLY
- Faulty turn signal relay
- Faulty main switch
- Faulty turn signal switch
- Incorrect turn signal bulb

TURN SIGNAL REMAINS LIT
- Faulty turn signal relay
- Burnt-out turn signal bulb

TURN SIGNAL BLINKS QUICKLY
- Incorrect turn signal bulb
- Faulty turn signal relay
- Burnt-out turn signal bulb

HORN DOES NOT SOUND
- Improperly adjusted horn
- Damaged or faulty horn
- Faulty main switch
- Faulty horn switch
- Faulty battery
- Blown, damaged or incorrect fuse
- Faulty wire harness

Downloaded from www.Manualslib.com manuals search engine

Downloaded from www.Manualslib.com manuals search engine

CS50/Z 2002 WIRING DIAGRAM

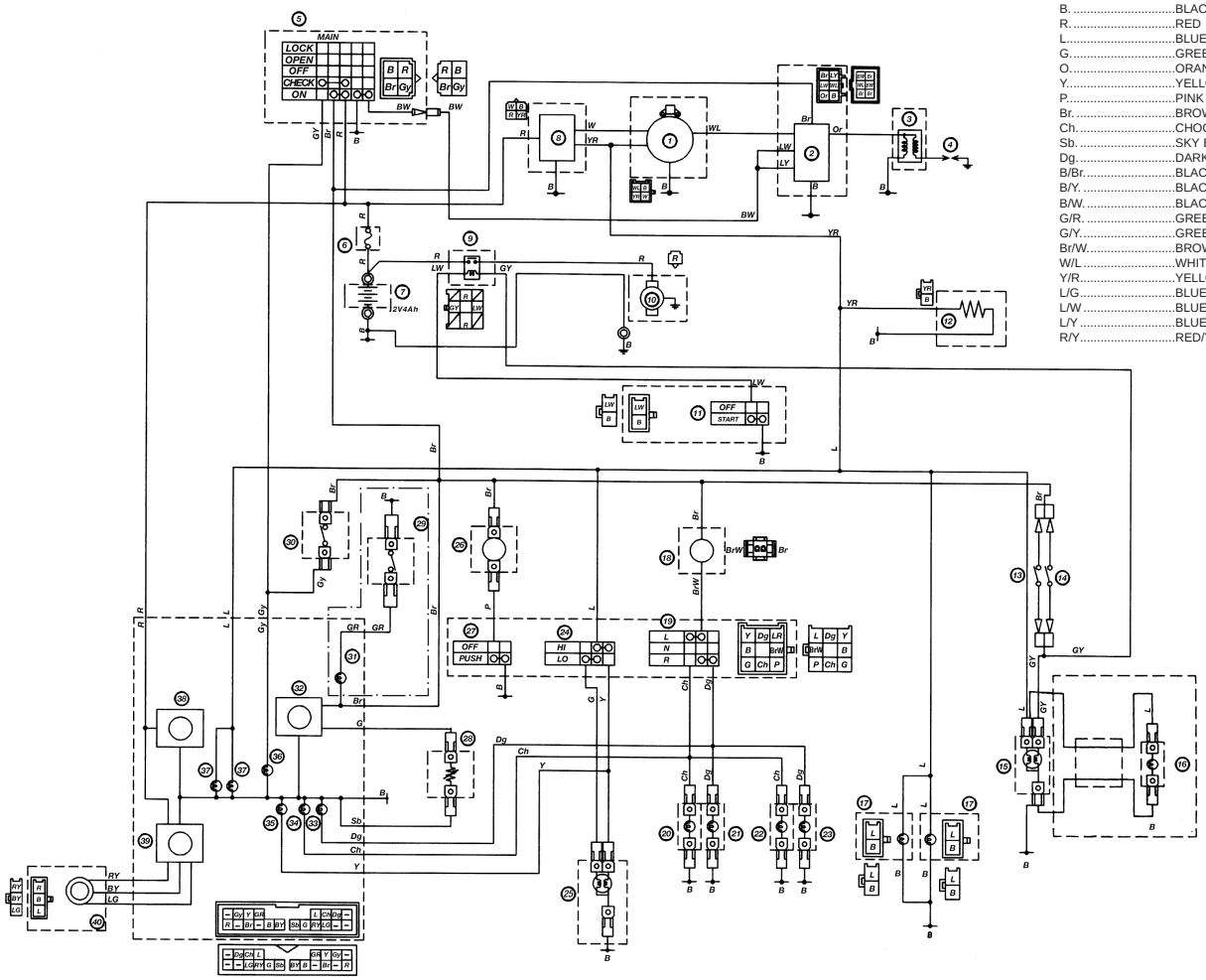

COLOR CODE

B. .....BLACK
R. .....RED
L. .....BLUE
G. .....GREEN
O. .....ORANGE
Y. .....YELLOW
P. .....PINK
Br. .....BROWN
Ch. .....CHOCOLATE
Sb. .....SKY BLUE
Dg. .....DARK GREEN
B/Br. .....BLACK/BROWN
B/Y. .....BLACK/YELLOW
B/W. .....BLACK/WHITE
G/R. .....GREEN/RED
G/Y. .....GREEN/YELLOW
Br/W. .....BROWN/WHITE
W/L .....WHITE/BLUE
Y/R. .....YELLOW/RED
L/G. .....BLUE/GREEN
L/W .....BLUE/WHITE
L/Y .....BLUE/YELLOW
R/Y. .....RED/YELLOW

1. DC-CDI magneto
2. DC-CDI. unit
3. Ignition coil
4. Spark plug
5. Main switch
6. Fuse
7. Battery
8. Rectifier/regulator
9. Starter relay
10. Starter motor
11. Start switch
12. Auto choke
13. Front brake switch
14. Rear brake switch
15. Tail/brake light
16. License light (for UK only)
17. Position light
18. Turn signal relay
19. Turn signal switch
20. Front turn signal light (Left)
21. Front turn signal light (right)
22. Rear turn signal light (Left)
23. Rear turn signal light (Right)
24. Dimmer switch
25. Headlight
26. Horn
27. Horn switch
28. Fuel sender
29. Thermo switch (for CS50Z only)
30. Oil level switch
31. Water temperature warning light (for CS50Z only)
32. Fuel meter
33. Turn signal indicator light (right)
34. Turn signal indicator light (left)
35. High beam indicator light
36. Oil level warning light
37. Meter light
38. Clock
39. Speedometer
40. Speed sensor

Downloaded from www.Manualslib.com manuals search engine